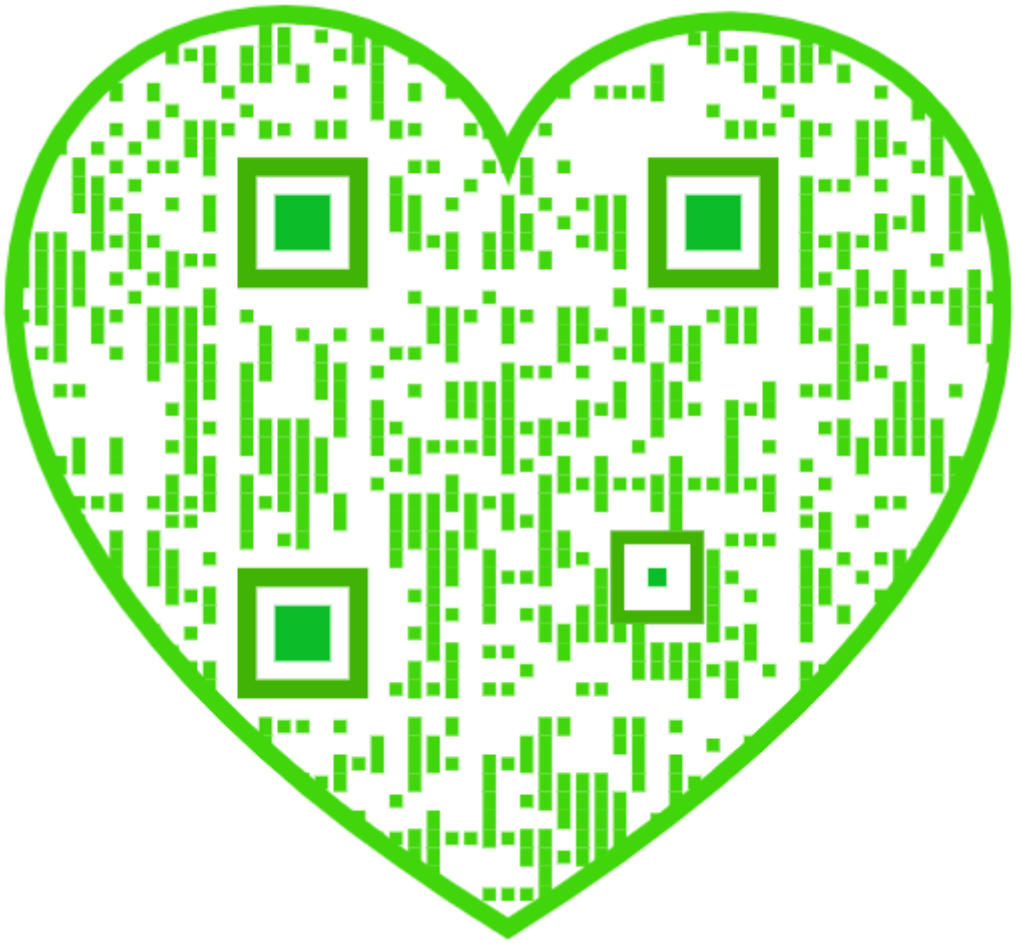

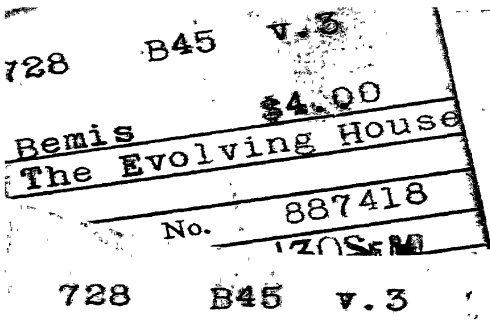

Keep Your Card in This Pocket

Books will be issued only on presentation of proper library cards.

Unless labeled otherwise, books may be retained for four weeks. Borrowers finding books marked, defaced or mutilated are expected to report same at library desk; otherwise the last borrower will be held responsible for all imperfections discovered.

The card holder is responsible for all books drawn on this card.

Penalty for over-due books 2c a day plus cost of notices.

Lost cards and change of residence must be reported promptly.

THE SCHOOL DISTRICT OF KANSAS CITY, MISSOURI

Public Library
Kansas City, Mo.

Keep Your Card in This Pocket

DATE DUE

30 SEM 77		JAN 18 '46 R 34	
17 OCT 87		MAY 2 '47 06	
1 DEN 90		MAY 11 '49	
4 SE 38 60		FEB 9 '53 7 ed. Res. Bk	
8 FE '39	68	SEP 9 '53	
28 AU '39	31	NOV 25 '53 77	
11 SE '39	31 R		
7 OC '39	72		
21 OC '39	R		
JAN 27 1940	38		
10 FEB 1940	R		
MAR 18 1940	12		
16 APR 1940	72		
APR 20 '42	50		
JUL 11 '42	84		
AUG 1 '42	R		
DEC 26 '42	34		

THE EVOLVING HOUSE

Rational Design

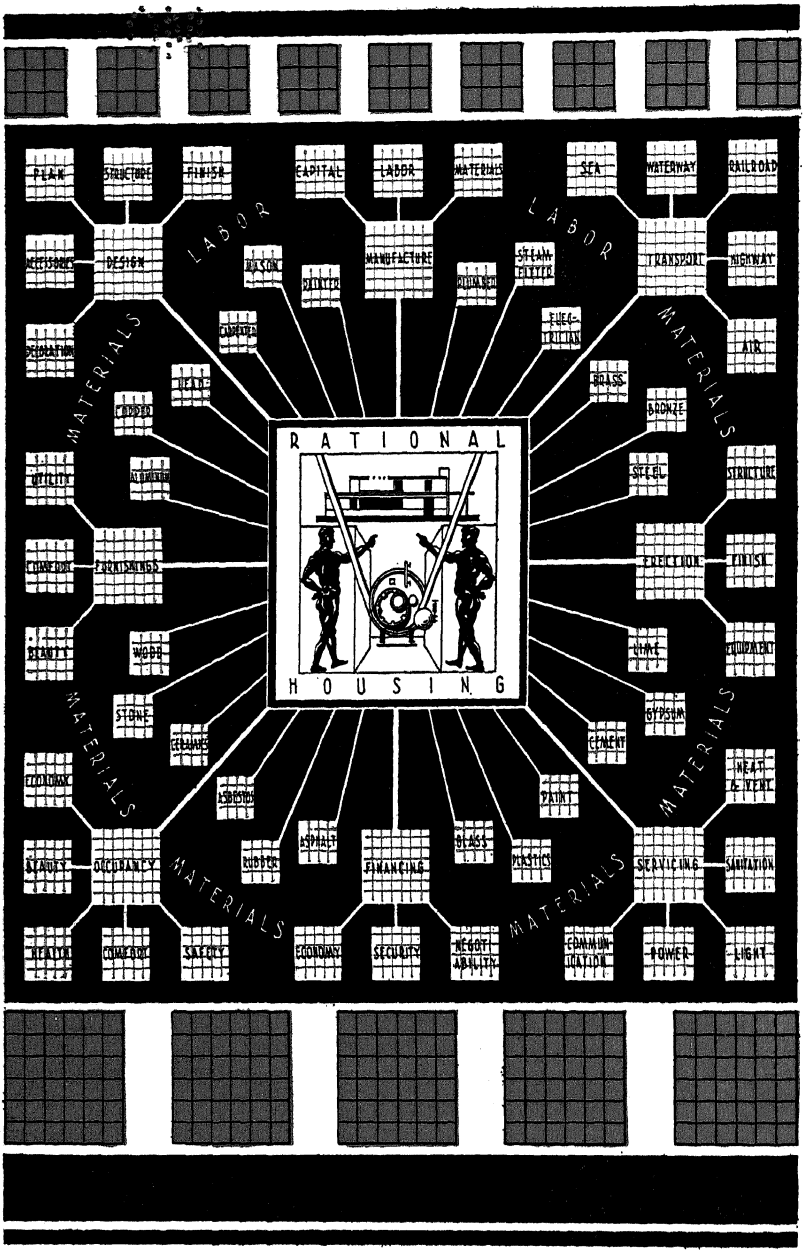

FIG. 1. RATIONAL HOUSING

The Evolving House

VOLUME III

RATIONAL DESIGN

BY

ALBERT FARWELL BEMIS

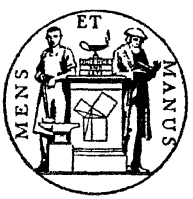

THE TECHNOLOGY PRESS
MASSACHUSETTS INSTITUTE OF TECHNOLOGY
CAMBRIDGE · MASSACHUSETTS

COPYRIGHT, 1936
BY ALBERT FARWELL BEMIS

PRINTED IN THE UNITED STATES OF AMERICA

All rights reserved including the right of
reproduction in whole or in part

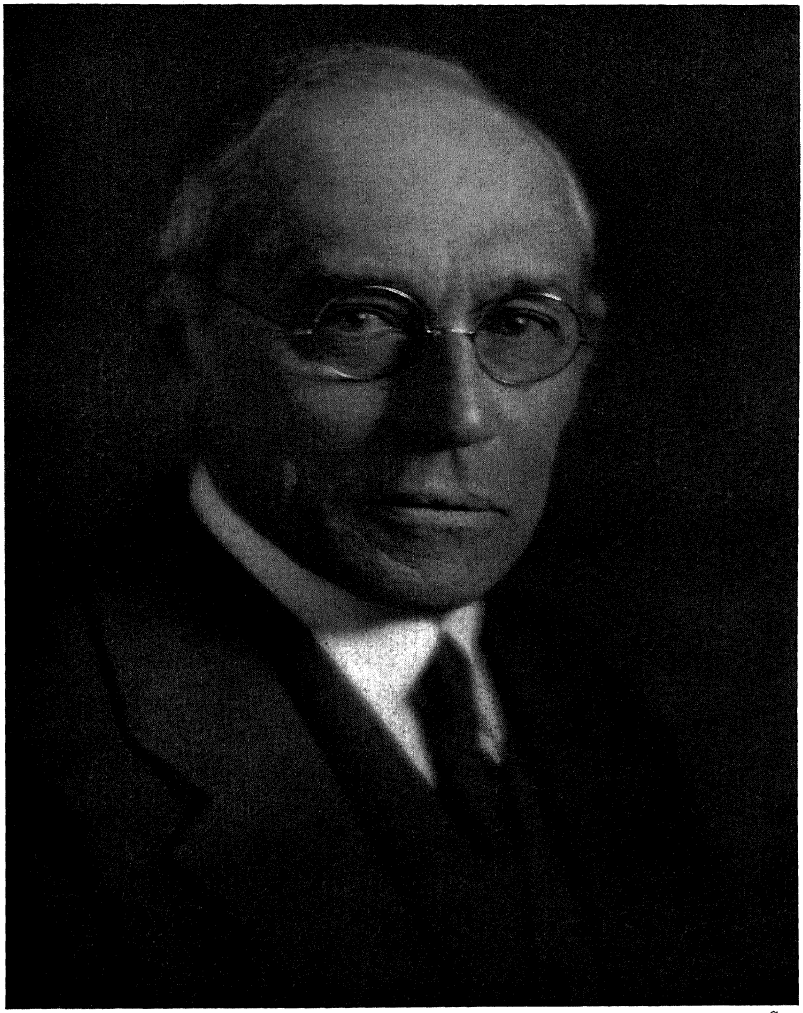

Garo

ALBERT FARWELL BEMIS

1870–1936

The publication of this volume had proceeded to the point of binding when word was received that its author had died on April 11. This portrait is inserted by his associates and publishers as an expression of their affection for him and of their admiration for the high purposes which governed his efforts to point the way toward better housing at lower costs.

The decade which was closed by his death saw the development by Mr. Bemis of the fundamental theory of structural design which he outlines in this volume. That he will not supervise the next step in his program — that of inaugurating practical applications of this theory in housing — is definitely society's loss. His idea and ideals remain, to aid and stimulate others in their drive for better housing as a major need of our times.

DEDICATED
TO THE
BETTERMENT OF THE HOME
THE CRADLE OF
THE BODY
THE MIND
THE SPIRIT

Foreword To All Volumes

THE general purpose of this three-part work is to deal with one of the fundamental features of human existence, housing or shelter. The subject offers a rich field for investigation, and the economic and social questions involved press urgently, in one form or another, upon society and upon the individual.

For more years than I like to contemplate it has seemed to me that the means of providing homes in modern America and elsewhere have been strangely out of date. The provision of food and clothing has been organized, increased, and facilitated to an extraordinary degree, and the same is true of the more complex needs of heat, light, transportation, luxuries, recreation, information. Why is the house which one builds for his family to live in for a generation, why is the house almost outside the influence of modern mass production methods? Should it be brought within their scope? If so, how? Such questions have been surging within me now for at least eight or ten years and these volumes contain my effort to answer them.

The method of attack necessitated first, in Volume I, a review of the evolution of the home and the social and economic forces which have influenced its development; then in Volume II an analysis of current housing conditions and trends and comparisons with the methods of other industries. Thus we should be able to find out what is the matter with housing and wherein it lags behind in the march of civilization. Finally, a solution of such problems is offered in the third volume in the form of a rationalization of the housing industry, thus harmonizing the

means by which our homes are provided with those mostly used in supplying the other major needs.

This rather large task, I am frank to say, I have approached with the distinct preconceived idea that the chief factor of the modern housing problem is physical structure. A new conception of the structure of our modern houses is needed, better adapted not only to the social conditions of our day but also to modern means of production: factories, machinery, technology, and research. Other industries have made use of such forces to a far greater extent than the building industry has done. The peculiar and complex nature of the building industry has thus far thwarted basic improvement in methods of house construction; but rationalization of it with respect to the other industries is imminent in all countries where, in varying degrees, mass production prevails.

Mass productive methods have come to stay, because they are simply the further development of the division of labor. It seems to be a law of life that function or labor is divided and subdivided, specialized and further specialized, infinitely and forever. Further extensions of mass production into both old and new fields may be confidently predicted. A study of housing as one of the chief factors in the " cost of living " in comparison with all other factors quite clearly indicates its backwardness compared with those other things which our present-day life demands. To bring it into harmony with the others is primarily an engineering problem which has gradually developed in character and importance during the last century and particularly in the last decade. It has not been adequately dealt with, probably because of its very complex and diverse character; it is easily seen in its generalities but hard to grasp in its details.

The solution is obviously through rationalization because the present methods of house production are old and out of harmony with methods used in other industries. The factors involved are by no means wholly structural or industrial; but social custom, living standards, public welfare, property, finance, esthetics, and still other factors must be balanced.

But balance among these factors can not be established until the housing structure, which is the basis of the whole problem, has been rationalized. The existing house structure was mostly developed before the industrial age, and grew out of the materials and methods and social standards of earlier centuries. The structure is physically sound but not well adapted to recent technical advances in materials and applied mechanics. Its elements are not well suited to manufacture by mass production or to ready field erection. It is not adapted to large-scale credit financing at low cost. Furthermore, it is very ill-fitted to include the accessories which, in these days, make the home. We are clearly putting new wine into old bottles when we implant modern heating, lighting, and plumbing into the house structure and architecture of two centuries ago. Finally, from the esthetic viewpoint it does not adequately express the spirit of the present era or utilize the wealth of adornment available through new materials, colors, and textures.

The whole world today is experiencing an evolutionary maladjustment far more significant than any unbalance between industries. Productive means have far outstripped control means and distributive means. Potential production, including transport, is sufficient to supply the necessaries of life in abundant quantity to every man, woman, and child throughout the world. But our economic and political control methods are out of date and full of flaws. Millions are pinched and even starving in the midst of plenty. But the time is nearly here, and the forces are working toward it, when improved technology of control and distribution will tend to harmonize and balance with our technology of production. The great communistic experiment of the Soviets, the autocracy of Mussolini, the spiritual democracy of Gandhi, the flounderings of all entrenched political and economic forces, including those of the United States, the philosophy and suggestions of the scientists, including " Technocracy," are all valuable contributions to this end. Rationalization between world production and distribution through which we shall make better use of our recent great

advances in productive technique for the general public good is clearly on the horizon. The present depression is drawing it towards us. But its approach will not stop the continued play of evolutionary forces in the field of production in general and housing in particular. In fact, improved technique of control between methods of production and distribution can hardly occur until the existing maladjustment between the building industry and our other great industries has been annulled.

It is a very far cry from the time when primitive man first used the protecting shelter of a tree or a cave down to present-day complex life and the home which it demands. Yet during this period of a half million or million years man and his home have been evolving under exactly the same natural forces as exist today, and we can draw a picture of the evolution of his home and some of the influences which have brought it to the present point. We can note the interplay through the ages of man's physical, mental, and spiritual urges. The interplay of these forces has tended always, though in waves, toward further and further specialization in supplying man's wants and cravings. Increasing technique has meant increased knowledge, more knowledge has furthered man's higher aims, and so in continuous subdivision of man's work the human race has progressed. The home, one of man's primary needs, has helped to conserve and pass down to subsequent generations and ages his mental accomplishments; and within the home man's vague superhuman sense, the spirit, has evolved, ever urging onward and upward. No inquiry could be more interesting, more illuminating, more profound or more far reaching, more significant or more pertinent to present needs, than a study of the houses of mankind.

ALBERT FARWELL BEMIS

Preface to Volume III

THE picture of the Evolving House contained in this trilogy is necessarily limited and faulty. Yet reviews and comments and librarians' reports seem to indicate that the subjects to which Volumes I and II are directed have not been adequately covered in the literature of recent times and that these two books have thus in some part fulfilled a need. It is my hope that this third volume will be a helpful factor in the purposive future evolution of the house that I have called its rationalization.

Although prepared under such pressure of time and circumstance as render completeness impossible, this contribution toward lower-cost housing must be given, and given now. It is long overdue. It is not what I wish it were, but if I held back until it wholly suited me, or until it met every aspect of the current situation and of future prospects, it would never be finished. I see its deficiencies clearly, but the time is ripe for its publication, and I hope and believe it will be a contribution, not only to the solution of the housing problem but to the rebuilding of a sounder economy.

The need of some genuine and drastic curative means is so instant and so extreme, and the nature of the housing problem is so confused that no remedy can hope to suit all the anxious critics at once. Sound criticism and suggestion I sincerely court and shall receive with an open mind. Of set purpose, I have given no detailed consideration to political and economic aspects or that of social welfare. Whether or not lower costs are implicit in rationalized structure, the whole question of costs

and prices, as well as those of commercial organization, factory processes, and the like, have in this volume been merely sketched in. The bearing of the broad rationalization of housing upon sociological and political problems has been scarcely indicated. Slum clearance, social betterment, right standards of living are matters left to other writers and thinkers. This book is preoccupied with a method of design. It is an engineering solution, and it subordinates all other aspects, however vital.

The urgency of the need for better homes, built with less waste of human effort, was clearly apparent in Volume II, and has been ever present in my mind. The best way to meet that need is through the natural forces of evolution — through improvement in the physical technique of providing shelter, and the broad cooperative use of that technique by all concerned. This book suggests an improvement in such technique and offers a means for its cooperative application.

The principle of the cubical modular method is so simple yet complex that the terms necessary to explain it, such as *rectangularity*, *modularity*, *cubical module*, and *matrix*, will require usage before the conception can be accepted as the merest common sense. Yet like many another fundamental conception, once seen the principle exemplified in the cubical module turns up endlessly. It is found in the weaving process, in tapestry, brickwork, and tiles, as well as in the processes of mass production, the nature of building materals, the rectangularity of building structure. All these, and the many more things both tangible and intangible which compose our daily environment and in which we find utility, beauty, and satisfaction, are virtually founded upon a similar conception. And just as all matter, which seems so very diverse and complex, may prove to be built from single infinitesimal units, so things hard to see at first often prove simple when once discerned. Fifteen years of study, thought, research, and experiment have established for me the soundness of this elementary approach to building structure — the cubical modular conception.

Throughout this volume certain terms have been used in a

broader application than is perhaps usual, others in a more restricted sense. *Structure* has been used, not as a synonym for *edifice* or for the work of erection but, more exactly, for the system and for the combined essential parts that produce a building. By *mass assembly* is meant assembly that is ready, automatic, standardized, mechanized — a process that can be applied to a total of many isolated buildings as well as to large groups. *House* is used in its collective sense — *housing*. These and other terms are defined by the context as consistently as possible.

In a supplement to this volume, my engineering associate, John Burchard, 2nd, describes and evaluates the more important efforts to design a house suited to pre-fabrication. Among these are included a few of my own structures, which have been built and may be seen, as may most of the examples included in this critique. The examples selected probably in no case represent the designer's latest ideas; they are all mere seeds of growth in prospect. They are contributions to the process of rationalization. Viewed in combination, these efforts have great significance to the problem of pre-fabrication, but they are not a solution. They focus upon the present time, and on present materials and points of use. They illustrate types of structure that may be coordinated in a complete and rational system of structure, and the critique of their values, therefore, is an important adjunct to the proposals of this book. Critique and proposals together may give such impetus to the search for new materials and new methods for reducing costs and improving the product that the movement will gather momentum in spite of economic conditions seemingly unfavorable.

To all the members of my office organization my thanks are due for diligent and long-suffering labor that is part of the background of this book. Messrs. John Burchard and Myron W. Adams have been particularly helpful in developing certain more technical portions of the text, while my architectural associate, Mr. John F. G. Gunther, has assisted in the preparation of material relating to architecture, together with the illustra-

tions for Chapter VIII. The other excellent drawings were prepared by Messrs. Germond and Bradley. The effective critical participation of Miss Gregg, Miss Boyer, and Mrs. Hopkins has been indispensable. All these patient people have assisted me in a long-drawn-out effort that is the fruition of a long-time interest in housing and particularly in building structure.

Now that the theory has been set forth in the pages that follow, I can retreat from the uncomfortable rôle of author to the more congenial one of inventor, designer, and producer in study, laboratory, and shop. The cubical modular method is only a device, offering the means for rational design. Its tangible demonstration and practical proof will require years of effort. To aid in this effort is my earnest desire, for the provision of better homes is the opportunity and the necessity of the times.

ALBERT FARWELL BEMIS

BOSTON, MASS.
MARCH, 1936.

Contents

PAGE

Foreword to All Volumes vii

Preface to Volume III xi

Prefabrication and Architecture xxxiii
An Introduction by A. Lawrence Kocher

I. Efforts toward Rational Housing . . . 3
Demand for Rationalizing the Housing Industry 3
Need of Modern Production for a New Conception of House Structure 4
Present Efforts toward Mass Production: Concrete Wall Slabs, Pre-cut Lumber, Gypsum Block, Poured Concrete, Pre-cast Wall Units, Steel Frame, Panel Systems, Room Units 5
Present Efforts toward Standardization of Building Materials 10
Radical Innovations: Mast-supported Houses, and Columnar Structures 12
Organized Research in Housing Materials . 12
New Methods of Marketing Houses . . . 13
New and Technical Conception of Structure as the Basis for General Rationalization 13

II. What Is Rationalization? 15
Definition and Interpretation of Rationalization 15
Present Emphasis on Distribution and Mass Production 18

PAGE

Rationalization as Applied to the Housing Industry 19
Development of the Housing Industry Compared to Other Industries 19
Methods of the Housing Industry Compared to Automobile Manufacture 21
No Change in Theory of Structure Necessary at Present 22
Distinction between Theory of Structure and a New Conception of Structural Design . 22
Need for a Unified Conception 22

III. Mass Production and the House . . . 23
Demand of Rationalization for a Single Form of Structure to Meet All Requirements . 23
Requirements to be Satisfied: Climatic, Topographic, Economic, Social 23
Rectangularity as the Dominant Physical Characteristic of the House 27
The Roof as an Exception 27
Present Mass Production of Raw Materials for Buildings 29
Demand of Mass Production and Automatic Assembly for Standardized House Parts 32
Freedom of Esthetic Treatment with Mass-produced Units 33
Present Methods of Mass-producing the House 33
Definition of Mass Production 34
Adaptability of Building Materials to Mass-production Processes 35
The Two Basic Requirements for Mass Production 36
Relation of Mass Production to Field Assembly 39
Minor Processes of Mass Production . . . 40
Attitude of Architects to Mass-produced Forms 41

PAGE

The Cube as the Unit of Measure for the Mass-produced House 41

IV. Standardization for House Parts 42
Relation of the Cube to Existing Structural Theory 42
Earlier Use of the Linear Module 42
Demand of Mass-production Technique for a Cubical Module 43
Form and Size of House Parts as the Basis for Standardization 43
Unrelated Dimensions of Present House Parts 43
Uncoordinated Standardization of Present Mass-produced Materials 45
Attempted Standardization of Bricks and Metal-framed Openings 45
Present Disorganized Methods of Assembly . 46
Difficulties Presented by Nature of Building Materials 47
Analysis of the Structure of the Traditional Wood-frame House as the Basis for Standardization 48
Classification of Structural Parts 50
Dimensional Relationship of Structural Parts of the Traditional House 50
Integral Relation of Structural-wall Thickness to Other Parts 53
Dimension of the Structural Wall as a Module in Three Planes 56
Relation of Roof Structure to Module . . . 56
Minor Restrictions Imposed by the Use of the Module 58
Adaptability of the Module to Steel-frame and Masonry Construction 59
Size of the Module 64

PAGE

Cube of Structural-wall Thickness as the Module for Rational Design 65

V. The Cube as a Module 66
The Cubical Module as a Practical Unit for the Design of Specific Structural Parts . . 66
Analysis of Traditional House Design as Corroboration 66
The Cubical Module in Design for Mass Production and Standardized Assembly . . 66
Aspects of the Abstract Potentiality of the Cube 68
Potentiality of Volume 68
Rectangular Structure as Represented by the Total Matrix of Cubes . . 68
Outline of Structure as Formed by Removing Cubes 69
Flexibility of Modular Layout . . . 73
Main Cube Groups 74
Intersection Cube Groups 74
Potentiality of Symmetry 74
Correspondence within Cubes . . . 74
Definition of Modularity 76
Transference of Modularity . . . 77
Importance of Jointing Design . . 77
Jointing Matrix Location and Size . 77
Subdivision of the Cube 80
Interconnection Foci 84
Differentiation of Function within a Cube 84
Essential Symmetry of Jointing . . 86
Potentiality of Surface 86
Surface of Cube Groups as Plane Modules 86
Projections of Axial Planes and Foci . 88
Complete Potentiality of the Cube 88

PAGE

VI. The Theory of Cubical Modular Design . . 92
The Cubical Modular Method as an Application of Abstract Principles 92
Cube Groups as Matrices for Practical Design 93
Total House Matrix Divided into Main Cube Groups 93
Main Cube Groups Divided into Structural Cube Groups 94
Broad Functions of House Construction . 94
Structural Member Defined 95
Distinction between Integrated and Differentiated Constructions 95
Cube Groups for Integrated Constructions: for Main Framing, for Walls and Floors, for Platform Construction, for Special Girt Arrangements . . . 95
Joint Matrices for Integrated Constructions: Overlapping 100
Post Matrix Extended One Module . . 104
Girt Matrix Extended One Module . . 106
Post and Girt Matrices Extended a Half Module 108
Cube Groups for Differentiated Constructions: with Surface Elements between Framing, with Surface Elements within the Structural Matrix, with Surface Elements outside the Structural Matrix 108
Secondary Framing in Joint Matrices . 110
Matrices for Frame Interconnection . . 112
Summary 114
Case I. Ideal Integrated Construction . . 114
Hypothetical Building Material . . . 114
Erection of Hypothetical Construction . . 114
Ideal Jointing and Symmetry of Structure 116
Summary 116

PAGE

Case II. Jointing of Integrated Constructions 116
Dimensioned Jointing Design 116
Bonded Joint 117
Connection and Interconnection 118
Three Types of Interconnection 119
Joint Intersections in One Plane . . . 121
Foci for Fastening 121
Joint Design at Wall Intersections . . . 122
Restricted Matrix for Jointing 123
Spline or Butt Joint in a Restricted Matrix . 124
Jointing with Extended Posts 125
Joints at the Girt 126
Jointing with Extended Girts 127
Grouping of Joints According to Function . 128
Constructions Using Mixed Jointing . . 129
Aligners as Jointing Elements 130
Compound Joints 130
Summary 130
Case III. Composite Members Designed within the Structural Matrix 132
Three Groups of Structural Materials . . 132
Necessity for Composite Members . . . 133
Division of Member into Surface and Core Portions 133
Design of Members to Include Connection Details 135
Core and Surface Elements 135
Design for Wood and Fibrous Materials . 135
Design for Cementitious or Cast Materials 136
Design for Metallic Materials 137
Designs Combining Various Materials . . 139
Unsymmetrical Designs to Suit Functional Requirements 141
Unsymmetrical Locations of Elements . . 142
Non-structural Insulating Material . . . 143

PAGE

Modular Interfitting of Elements within the Member 144
Modular Design within Matrices . . . 146
Summary 146
Case IV. Constructions Not Designed within the Structural Matrix, and Differentiated Constructions 147
Jointing of Integrated Constructions Extending beyond the Structural Matrix . 147
Location of Frame Members in Differentiated Constructions 151
Framing of Wood or Fibrous Material . . 152
Framing of Metallic Material 153
Framing of Cementitious or Cast Material . 153
Complete Use of Interconnection Foci . . 154
Interconnection of Wood-type Framing . . 156
Interconnection of Metal-type Framing . 156
Interconnection of Cementitious-type Framing 159
Main Framing Interconnections 159
Design of Elements Placed outside the Structural Matrix 162
Modular Corner Strips and Units . . . 164
Foci of Interconnection for Elements outside the Structural Matrix 164
Foci of Interconnection for Battens and Finish Elements 165
Partially Integrated Constructions . . . 166
Summary 168
Case V. Multiple-Wall Constructions . . . 168
Need for More Than a Single Wall Thickness 169
Matrices for Thick Walls 169
Matrices for Compound Walls 171
Design of Thick-wall Construction within the Structural Matrix 171

PAGE

Combinations of Wall Structure for Standardized Design 174
Design of Thick Wall with Finish outside the Structural Matrix 175
Distinction between Bearing Walls and Non-bearing Partitions 176
Compound-wall Design 178
Double-wall Construction 180
Summary 180
Case VI. Non-rectangular Constructions . . 181
Abstract Problem of Sloping Roofs . . . 182
Two Types of Matrices for Sloping Structure 184
Roof Design Using Projected Modules . . 184
Projected Modules for Various Slopes of Roof 186
Roof Design Using Cubical Module . . . 188
Non-modular Relations at Roof Ridge . . 190
Summary 190

VII. Applied Cubical Modular Design 194
Theory Applied to Actual Materials . . . 194
Three Groups of Structural Materials . . 194
Advantages of Wood 195
Effect of Moisture on Wood 195
Plywood 195
Metal Connectors 196
Wood-Fiber Products 196
Cementitious Materials as Masonry . . . 196
Cement and Plaster 197
Concrete 198
Gypsum Products 199
Advantages of Metals 199
Structural Use of Non-ferrous Metals . . 200

PAGE
Steel for Framing 200
Metals for Finish and Trim 201
Insulation for Heating Economy . . . 201
Insulation to Prevent Condensation . . . 201
Best Location of Insulation 201
Design of Structure and Layout of Houses . 202
Practical Size of a Module 204
Uniform Analysis of All Constructions . . 205
Clearances at Joints 207
Modular Design of Clearances 207
Structural Masonry Constructions 212
Modular Design of Masonry Constructions . 212
Modular Design of Concrete Constructions . 214
Wood-frame Constructions 216
Modular Design of Balloon Frames . . . 216
Modular Design of Platform Frames . . 219
Necessity for a Constant Three-dimensional Base 222
Steel-frame Constructions 222
Skyscraper and Close-spaced Types . . 222
Modular Design of Steel Frames . . . 223
Integrated Constructions 228
Economy of Integration 228
Degree of Standardization Possible with Full Integration 229
Greater Standardization with Double-wall Construction 230
Fully Integrated Construction of Plywood . 231
Modular Design of Plywood Construction . 231
Windows and Doors 234
Modular Design of Windows 234
Stairs 238
Modular Design of Stairs 238
Accessories and Services 241
Modular Location of Accessories . . . 241

PAGE

Layout 242
Layout by the Cubical Modular Method . 242
Modular Centering of Openings 245
Conclusion 247

VIII. The Cubical Module in Architectural Design 250
Attitude of the Architect 250
Attitude of the Client 251
Aspects of Modern Design: Functional Architecture, Technical Architecture . . . 251
Influence of Materials 252
Principles of Unity 254
Unity in Design through Use of the Cube . . 254
Unimportance of the Cube as Motif . . . 256
Innovations in Style 256
Use of Traditional Materials 258
Variety in Treatment 258
Large Edifices and Standardization . . . 262
"Hand-made" Houses 262
Standardized Layouts and Individuality . . 264
Standardization as an Ideal 264
Versatility of Small Unit of Design . . . 266
Individual Interpretation 270
Wider Scope for the Architect 271
Fantasies of the Future 272
Opportunity for Rationalization 272
Cubical Modular Structure as an Architectural Medium 272

IX. Rational Production 273
Cooperation between Technology and Art . . 273
Present Technical Position of Housing . . 273
Changes Required in Methods 273
A New System of Production 275
Effects of Cubical Modular Design on Methods 275

PAGE

Rational Distribution 275
Variety of Product 276
Application of Finish 276
Size of Parts 276
Inclusion of Accessories 276
Resulting Economies 277
Association of Architect and Engineer . . . 277
Improved Methods of Handling 277
Transportation and Systematic Movement of Goods 277
Standardized Assembly and Erection . . . 278
Reduced Costs 279
The House as Security 279
A Rationalized Industry 280
Development of Capital 280
Attitude of Labor 280
Modular Design as the New Industry . . . 281

X. Patents and the Cubical Modular Method . 282
Patenting as a Policy 282
Definition of the Patent 282
Procedure of Obtaining Grant 284
Period of Monopoly 285
Rights Conferred 285
Working Requirements 286
Taxes Imposed 286
The Ethics of Monopoly 287
Need for Protection 288
Active Interest in Housing 288
Economic Requirements for Profitable Development 289
Social Development 290
Financial Development 291
The Writer's Opinion 292
His Intended Procedure 293

PAGE

XI. Social Significance of the Cubical Modular Method 294
Social Consequences of Technical Innovation . 294
Fundamental Aspects of Rationalization . . 294
Obligations of Government 294
Significance of Cubical Modular Method for the Future 296
Benefits of Rationalization 296
Temporary Losses 297
Sustained Employment 298
Benefits to the Individual 299
Social Benefits 300
Economic Benefits 300
Opportunity for the Architect 301
Significance of the Cubical Module in Rationalization 302

Appendices
A. Rectangularity of Housing 303
B. Comparative Cost of Inclined and Flat Roofs 317
C. Multiple Openings of Various Sizes and their Relations to Symmetry in Modular Walls 321
D. Modular Patents 325

Supplement: Survey of Efforts to Modernize Housing Structure
By John Burchard, 2nd
Foreword 331
The Systems 336
Mention List 590
Questionnaire for Sponsors 600
Bibliography 609
Alphabetical Index 613
Chronological Index 617
Classified Index 621

List of Illustrations

FIGURE		PAGE
1.	*Rational Housing*	*Opposite Title Page*
2.	*Comparison of Present Motor-car Assembly Methods with Rationalized House Assembly Methods* . . .	20
3.	*Regional Types of Housing*	24–25
4.	*Percentage of Rectangularity of Volume of Various Residential Types, United States,* 1935 (*estimated*)	29
5.	*Contrast between House Building and Motor-car Making*	31
6.	*The Two Primary Requirements for Mass Production*	37
7.	*Repetitive Features an Aid to Assembly in Mass Production*	38
8.	*Dimensions of Typical Wood-frame House Structure (Platform Type)*	44
9.	*Principal Parts of Typical Wood-frame House Structure (Platform Type)*	49
10.	*Commercial Variations in Size of Nominal 2″ x 4″ Wood Stud*	51
11.	*"Structural-wall Thickness" for Various Structural Types*	54
12.	*Cross-section of Typical Wood Frame (Platform Type)*	55
13.	*Plan and Section of Typical Wood-frame Structure (Platform Type)*	57
14.	*Masonry Module of 8″, Laid-in-the-wall*	60
15.	*The Module and Brick-veneer Construction*	63
16.	*Aspects of Cube Potentiality*	67
17.	*The Total Matrix of the House*	69

FIGURE PAGE

18. *The Structural Mass Defined within the Matrix* . . . 70
19. *The House Structure Defined within the Matrix* . . 71
20. *Flexibility of Modular Layout* 72
21. *Major Cube Groups of the Structure* 73
22. *Major Cube Groups of the Frame* 75
23. *The Finished House within the Matrix* 76
24. *Transfer of Modularity by Jointing* 78
25. *The Cube as a Matrix for Jointing* 79
26. *Limitation in Width of Jointing Matrix* 81
27. *Division of the Modular Cube by Its Axial Planes* . . 82
28. *Axial Planes of Secondary Cubes* 83
29. *Axial Planes — Differentiation of Function* . . . 85
30. *Surfaces of the Cube as Plane Modules* 87
31. *Focal Points of Interconnection for Parts outside the Structure* 89
32. *Potentiality of the Cube to Repeat Any Feature* . . . 90
33. *Cubes of Girt and Post Intersections* 96
34. *Cube Groups of Wall and Floor* 98
35. *Alternative Arrangements of Girt Cube Groups* . . . 99
36. *Jointing Cubes in a Single Plane* 101
37. *Jointing Cube Groups in Three Planes* 103
38. *Post and Girt Cube Groups Extended into the Wall* . 105
39. *Girt Cube Groups Extended into Walls and Floors* . . 107
40. *Post and Girt Cube Groups Extended a Half Module into Walls and Floors* 109
41. *Cube Groups for Framing* 111
42. *Matrices for the Intersection of Framing* 113
43. *Assembly of Ideal, Fully Integrated Structure* . . . 115
44. *Masonry or Bonded Joint* 117
45. *Three Basic Arrangements of Connection and Interconnection* 119
46. *Joint Intersections in a Single Plane* 121
47. *Vertical Joints at Wall Intersections* 123
48. *Horizontal Joints at Girts* 127
49. *Three Types of Joints in a Single Structure* 130

FIGURE PAGE

50. *Combinations of the Three Types of Joints and Aligners* 131
51. *A Composite Member Built Up of Surface and Core Elements* 134
52. *Composite Members of Cast Material* 136
53. *Composite Members of Sheet Metal* 137
54. *Composite Members Combining Different Materials* . 140
55. *Composite Members of Unsymmetrical Design* . . . 142
56. *Composite Members That Include Heat Insulation* . 145
57. *Jointing Extended outside the Structural Matrix* . . 148
58. *Special Interconnecting Elements at Corners* . . . 149
59. *Wood-frame Assembly* 152
60. *Metal-frame Assembly* 154
61. *Frame of Pre-cast Material* 155
62. *Interconnection of Studs and Joists with Main Framing* 157
63. *Interconnection of Post and Girts with the Post Extending through the Girts* 160
64. *Interconnection of Post and Girts with the Girts Extending through the Post* 161
65. *Surface Elements Applied outside the Structural Matrix* 163
66. *Attachment of Surface Elements Placed outside the Structural Matrix* 165
67. *Partially Integrated Constructions* 167
68. *Cube Groups for 2 M Outside and 1 M Structural Walls* 170
69. *Cube Groups for 1 M Structural Walls with Modular Siding or Veneer* 172
70. *Construction of 1 M and 2 M Walls with Finish within the Structural Matrix* 173
71. *Construction of 1 M and 2 M Walls with Finish outside the Structural Matrix* 175
72. *Framing for a 1 M and 2 M Wall Construction Showing Complete Use of Foci* 177
73. *Frame Construction with Modular Siding* 179
74. *A Completely Separated Double-wall Construction* . 181

FIGURE PAGE

75. *The Three Dimensions of a Sloping Roof* 183
76. *Sloping Structure Designed on a Projected M Module* 185
77. *Vertical Modularity for Various Roof Slopes* . . . 187
78. *Sloping Structure Designed with the Cube as a Module* 189
79. *Interconnection of Ridge Beam with Roof Rafters* . 191
80. *Analysis of Structure — Plan of Superstructure* . . 206
81. *A Series of Modular Panels* 208
82. *Modular Steel Details* 210
83. *Clearances of Elements within a Member* 211
84. *Modularized Wood-frame Construction (Balloon Type)* 217
85. *Modularized Wood-frame Construction (Platform Type)* 220
86. *Steel-frame Construction Using Secondary Foci* . . 224
87. *Steel-frame Construction Using Primary Foci* . . . 225
88. *Details of Construction of Fig.* 87 227
89. *Integrated Construction* 232
90. *Casement Window in Framed Structure* 235
91. *Double-hung Window in Framed Structure* 236
92. *Casement Window in Integrated Structure* 239
93. *Double-hung Window in Integrated Structure* . . . 240
94. *Preliminary Sketch of Modular House* 244
95. *Relation of Wall and Window Centering* 246
96. *Design with Standardized Parts* 251
97. *Modular Design That Does Not Reveal the Cube* . . 253
98. *Vertical Treatments of Finish* 255
99. *Pure Horizontal Treatments of Finish* 257
100. *Modified Horizontal Treatments* 259
101. *Mixed Treatments* 260
102. *Mixed Treatments* 261
103. *Large-scale Cubical Modular Buildings* 263
104. *Large-scale Cubical Modular Buildings* 265
105. *City House* 267
106. *City House from Above* 268
107. *A Modular Hall* 269

FIGURE PAGE
108. *Corner of a Modular Living Room* 269
109. *A Modular Living Porch* 270
110. *A Modular Bedroom* 271

APPENDICES

A. *Isometric of Typical House, Showing Volumes That Are Non-rectangular* 305
B. *Cross-sections of Typical Houses for Three Geographical Sections of the United States, Showing Percentage of Volume That Is Non-rectangular* 310
C. *Combinations of Windows Symmetrically Located in a Wall an Even Number of Modules Wide* 322
D. *Combinations of Windows Symmetrically Located in a Wall an Odd Number of Modules Wide* 323

NOTE

For illustrations in the Supplement see Alphabetical Index, page 613

PREFABRICATION AND ARCHITECTURE

An Introduction by A. Lawrence Kocher

THE machine production of building materials and equipment is, in our modern age, the most powerful influence acting upon the character of the house. The dwelling is being unmistakably transformed by "modern means of production, factories, machines, technology and research."

Fabricated materials such as metals, light-weight concrete, plastics and other synthetic products, superior to natural ones in quality and accuracy, are awaiting use for house construction. These have already proved their worth in other technical fields, but their combination with a rational construction system for improved and simplified building has only begun.

The architect today has an impelling and legitimate interest in the product of the machine, because it clearly is the present medium of production. This is especially true in so far as its use in construction has been investigated and explored by such studies and practical demonstrations as have been conducted by Mr. Bemis.

Any new system of construction, to justify its acceptance, must (1) promote flexibility and improvement in plan layout, and (2) provide economy and efficiency in the production, assembly, and use of structural units.

No system of construction, new or old, is fully satisfactory if it does not offer possibilities for improving the house in plan and appurtenance. In other words, architecture cannot be

limited to the fulfillment of its structural functions. It is obvious that the planning of the house in all its functional parts should be more flexible than it has been in the past. Convenience and safety of investment will be better insured by the house that permits easy alteration and addition of space units and of improved equipment. Internal partitions may be of light but soundproof material readily moved in case of alteration in size or use of rooms. This kind of planning and building would be favored by such a "unit" or modular system as has been developed by the author of this volume.

For both economy and successful "working of a house" the exterior design should follow the determined plan. This means an exterior which will be simple in outline, but adapted to its location. Our designers would find opportunities for expanding the living room out on to a garden terrace and otherwise increasing the utility of rooms. Sun porches would be featured, and there would be wide window spaces. Fenestration, lighting, heating, air-conditioning, and servicing of the house call for new thought and expression both in construction and architecture.

The function of walls for dwellings, as for other buildings, is changing with new construction technique. Walls are no longer the sole element of support as with the solid brick wall. The new space-saving construction transfers the supported loads to a light steel or concrete framework or to columns. With this construction, walls become mere screens designed to keep out rain, cold and noise. Walls, as screens, serve also as sources of light, controlled at will. Similar results will accrue from the panel type of construction that is increasing in prominence.

It is probable that schools of architecture have limited the scope of their training too closely. It is essential that teachers of architecture should inform themselves in the science of planning for needs and in technical developments.

The architectural schools should, by their instruction, interpret and translate the results of research in terms of applied design. Our present age is one of transition and requires guid-

ance. As Dr. R. E. Stradling, Director of Research, Building Research Station, Watford, England, has pointed out, our technical schools can serve as " real centers for the dissemination of the new knowledge to their regular students certainly, but in addition to the present generation of the industry."

THE EVOLVING HOUSE

Rational Design

CHAPTER I

Efforts Toward Rational Housing

IN this study of the evolution of the house a point has been reached at which specific forecast may be made of the next step in its development. The housing problem is a major issue in this and other civilized countries, and its economic aspects are so unsatisfactory that they compel the examination of its technical aspects.

Volume II of this series, under the title of "The Economics of Shelter," set forth the unprogressive condition of the housing industry as a whole. In an array of statistical facts it demonstrated that reorganization of this entire industry on a rational basis is imperative, and that only drastic changes in both practice and theory will establish a healthy balance between housing and other phases of our economic life. Analysis, definition, organization are the proven needs. The housing industry must first make within itself all the adjustment of function covered by the recent and still cryptic term "rationalization."

The need for rationalization is attested not only by research into economic conditions but by the clamant demand of every progressive architect, engineer, and industrialist. The expressions "low-cost housing," "pre-fabricated dwellings," "mass-produced houses" are no longer received with derision; they have become slogans as effective as they are understandable. Everyone who thinks at all about housing must admit that the public, almost overnight, has accepted the idea that rational development for the house implies mass production and must move along the lines of a practical, thoroughgoing reorganization of the industry.

But any specific scheme for better housing, and especially for lower-cost housing, will be inadequate unless it is based upon the analysis of house structure prescribed repeatedly in Volume II. In general terms it is there stated that the structure of the house, as the basis of the whole problem, must be scrutinized, analyzed, and reformed to suit present needs and demands — and perhaps fundamentally altered. *Only a new conception of structural design* can satisfy the terms of the present economy — *a conception that meets the requirements of modern engineering and industry.* These requirements include mass production, speedy assembly, scientific and social efficiency, and facile marketing.

To analyze house structure, to state fully the terms of this important and pressing problem of our times, to find a clue and follow it, to present a logical and practical solution in redesign, are the aims of this volume.

The conception of structural design here presented is not the first scheme for rational house structure to be offered to the public. Since the turn of the century, mass-produced building materials, new in form or substance, have been appearing in great number. Equally numerous proposals for mass-produced houses have been made, and a few of these have, in their tentative stages, reached the market. The interest they have awakened and the increasing need of low-cost dwellings will stimulate further activities in this direction. Behind all such efforts, moreover, is the impelling force of the industry's economic disabilities.

As a necessary preliminary, a brief discussion follows of the more significant efforts of recent years in mass-produced housing. These have been thoroughly studied, and their review will clarify the achievement to date and further prove the need for a new conception of structure. A detailed description of the better known efforts, prepared by my associate, John Burchard, 2nd, is published as a Supplement to this volume.[1]

Although the designers mentioned in this Supplement have

[1] Survey of Efforts to Modernize Housing Structure, p. 327.

been motivated, no doubt, by the keenest desire to meet obvious needs, no one of them can be said to have offered anything like a complete scheme for rationalizing housing. They have aimed at mass production, to be sure, but in practice they have concerned themselves mostly with particular features of the house and with special designs of limited application. Their ideas are not thoroughgoing; they fail to effect the necessary drastic changes. Of what the situation demands or what the structure of the house must be in order that it may be mass-produced, they seem to have only indefinite, cursory, superficial ideas. They have gone at the thing backward. Without analyzing the product, they have invented and designed cleverly enough, but from a specialized consideration of one or another material, of some merely local demand or some particular structural part — most commonly a wall unit. Because of this narrow attack and lack of coordination, their much-discussed offerings have accomplished little.

Great credit is due, nevertheless, to those who have pioneered in the field of rational structure. Whatever the ultimate value of their actual achievement, their determination and spirit in challenging traditional methods of house building have been an invaluable contribution. Thirty years ago Grosvenor Atterbury began writing about a reformed house structure, urging its need in the technical press and before architectural and other groups. And not only did he propose and urge; he invented and accomplished. To him must be given much praise for foresight and courage, and for definite achievement. His particular interpretation is adapted only to large concrete slabs and provides no solution for the general problem; but his product is a complete and durable house. He is an outstanding and fruitful pioneer.

Another American pioneer, Ernest Flagg, has notably and successfully simplified traditional structure, improved its quality, and reduced its cost. He has persistently designed his product in logical forms and of standardized substance, and always attractively. But his structure, too, has been limited in

kind. It is clearly a craft product, rather local in its possibilities, and without many mass-production features.

From the architectural viewpoint, perhaps this country's most outstanding attack on the problem of rationalization has been made by Frank Lloyd Wright. If estimated only by his use of the concrete wall slab his accomplishment is small; but that has not been his real contribution. His architectural work clearly expresses purpose, function, materials, and social and industrial conditions. Original always, it points the way to new structural design.

Houses of the traditional wood-frame type assembled from pre-cut parts were among the earliest efforts toward mass production. Had building laws been uniform and better suited to a pre-cut structure — as they well might have been — such efforts would have proved far more successful. This type of construction is still prominent and includes such systems as Hodgson Portable Houses and Enterlocking Fabricated Building Lumber. But the possible economies incident to such systems, although they are well worth effecting, are not really great. Furthermore, to provide a pre-cut frame of wooden sills, studs, and joists does not standardize the rest of the house or move toward genuine rationalization. And the rest of the house is by far the more costly and important.

More ingenious are the new types of wall, floor, and roof construction, as well as door, window, and other supplementary units. Most of these, however, are very restricted in scope; only a few might be expanded either in principle or in detail to exert a major rationalizing influence. Walls built of blocks made from mineralized excelsior or reinforced gypsum, or even of concrete poured within special forms, have in themselves but limited scope. To effect ultimate rationalization such structural members must be coordinated in some comprehensive scheme of standardization.

Forms for the pouring of concrete in place have contributed something to the cause. Thomas A. Edison, Will H. van Guilder, and many others have made contributions of this sort but with-

out the success from a practical point of view that the inventions themselves seemed to merit. If such improvements in structural detail had been coordinated with other practice, their significance in the development of a rational structure would be far greater.

Pre-cast wall units are probably the commonest forms of effort at structural improvement. They have been made most commonly of concrete, but gypsum has been used, and synthetic plastics and fibrous materials have been introduced. Simon Lake undertook to make whole walls and large floor slabs of pre-cast concrete with a very lightweight aggregate — thinner and much lighter than those of Grosvenor Atterbury. He has been, perhaps, too much in advance of the times, but his attack has too narrow an objective to succeed. The Rockwood columnar wall units of gypsum have useful and promising features, but only in a restricted field. One of the most useful contributions to wall construction of a traditional character has been that of Francis J. Straub in his cinder-concrete block. The number of special concrete blocks, wall tile, and floor slabs is almost legion. They are all steps in the inevitable progress toward the rational house, although they are not in themselves sufficient to form a comprehensive scheme.

With the predominating wood-frame structure in mind, notable efforts have been made to substitute metal framing for wood. The steel frame has many alluring qualities and possibilities, and efforts to frame the house in steel and other metals have ranged from full load-bearing types to those that are purely supplementary. Earlier attempts at the load-bearing type had frames like that of the skyscraper, made from large, heavy cross-sections of traditional character with correspondingly wide spacing between studs and joists to avoid excessive cost. There are one or two cases of this class in which the frame has been used outside the supplementary wall structure. More recently, load-bearing frames of special design have appeared. They are of traditional wood-frame spacing and usually include special means of one kind or another for attaching finish. More

recently still, and in large number and variety, metal frames of semi- or even non-load-bearing types have been employed: frames with aligning, or reinforcing, or jointing features, combined with slabs, panels, and the like to form a composite structure. In such cases it is often difficult to evaluate the relative significance of frame and other structure, though nearly all buildings include some kind of definite framing.

Numerous efforts employing one or another of these types of steel frame have been made both in this country and abroad. None of these efforts has thus far met with extended success as evidenced by wide use. In available shapes and sizes, steel is much more costly than wood per unit of post and beam strength. In using the thin steel that seems demanded by economical house construction, allowances must be made for its tendency to buckle and the possibility of serious loss of effective cross-section due to rusting. Furthermore, the frames themselves have not been standardized to conform with the widely varying conditions imposed by materials, climate, esthetic treatment, and other demands. Nevertheless, it may be the standardized structural metal frame that will serve as the medium of transition from the old to the new in house construction. Manufactured in standardized parts offering sufficient latitude in the application of finish and accessories, it may span the gap between the existing method of hit-or-miss hand manufacture on the site to the assembly in the factory of composite units ready for quick field erection.

Further advance toward mass production is represented by systems using a load-bearing frame and filler slabs or panels in walls and floors, standardized to interfit. Such systems are significant contributions — as, for instance, the structure designed by Robert W. McLaughlin, Jr.

Panel construction, now gaining prominence, subordinates the metal framing and amplifies the structural value of the panel slabs and other materials fastened into them. Moreover, the panel is adapted to include in a single, pre-finished element

the largest measure of structure, finish, and service accessories. That the house of the future will be built of elements incorporating these three functions in single units ready for placing and interconnecting seems already established.

Panel construction has been used increasingly during the past two or three decades for certain kinds of "temporary" one-story buildings. Usually such panels have followed traditional structure in their materials, wall surfaces, and design. Both in this country and in Europe, panel construction for permanent houses — and for more than one story — has been offered to the public in growing variety and amount. The British designer, J. C. Telford, under the sponsorship of Braithwaite & Co., Engineers, Ltd., employed flanged panels of sheet steel, fastened together along the flanges, for outside walls and roofs, and with this an inside structure and finish largely traditional. In this country similar systems have been developed by one or two designers, notably by Howard T. Fisher. In Sweden, a number of relatively inexpensive wooden panel constructions with sawdust filling have been employed with some success; one of them, the "Stadens," has been adopted by the City of Stockholm for community housing.

Among other types of panel systems, too numerous to mention here individually, some apply to a particular material, some are based on the needs or resources of a special locality, some are designed primarily for load-bearing, while others include provision for finish and the installation of services. Noteworthy contributions in this field are represented by the American Rolling Mill Company product in wall and floor structure and exterior siding, by the insulated board panels of A. Lawrence Kocher, and by the wall and floor structures made of the H. H. Robertson Company's corrugated, perforated sections and sponsored by the architects H. T. Lindeberg and Vincent Palmer.

Houses in which the completed room is the unit of structure and design have received considerable attention. W. H. Ham, writing in the *Survey* of February 15, 1929, urged this solution.

A few constructions of this type, such as those of Temple H. Buell and the cotton textile house of Stanley W. Nicholson, have been designed and, in the latter case, built experimentally. There are undoubtedly definite possibilities here, but the field itself is limited and difficult to develop.

All these efforts combine to indicate a new form for house structure in the early future, and suggest that the pre-finished panel type will prevail. But in panel constructions to date, as in all other types mentioned, the chief attention has apparently been directed to the use of some particular material and to the construction of the panel itself with reference to its attachment to an adjoining panel rather than to its function in the structure of the house. Nothing offered so far seems to represent a broad attack upon that general problem. Even though the new constructions tend more and more toward the panel type, designers have been competing rather than working together toward a unified conception of structure.

Yet efforts in this direction have been made, and a very significant movement was initiated early in 1934. This is a cooperative activity centering in the Bureau of Standards at Washington. Its primary aim is to effect much greater standardization of building materials. It has been endorsed by various bodies, including the American Institute of Architects.[2] A contributing suggestion by Frederick Heath, Jr., and others would focus standardization around a three-dimensional brick or masonry unit. Valuable results may be expected from the general movement, but better ones would follow if the focal point were a unified structural conception. Instead of using a variety of building materials as independent foci, why not first define structure and adjust the essential characteristics of each material to meet its requirements?

In the past century or two many revolutions have occurred in social customs, in the ways and the tools by which our wants have been supplied. Although candles and lamps are still used

[2] The Octagon, A Journal of the American Institute of Architects, Washington, D. C., July, 1934, p. 12.

for lighting, they are hardly a factor in present community life; first gas and then electricity outdistanced them. Foods are now prepared, packaged, and distributed for individual consumption by methods so different that old and new are almost unrelated. The spreading of information, methods of teaching and training are hardly comparable to the means current one or two centuries ago. The greatest revolutions of all have occurred in transportation and communication. It is a long way from the chance carrier of a message by sail to a regular, twenty-five-knot steamship service; it is farther still to the telephone and wireless. The saddle-horse and coach are unknown to most city-dwellers. Within a hundred years the span of a day's journey by land has increased a hundred fold. Traveling by horse in 1835, a man leaving New York in the morning might have slept thirty miles west; today, traveling by airplane, he could dine in Los Angeles. Between horse and airplane the physical connection is not obvious. And yet if Benjamin Franklin, Chaucer — or even Tutankhamen — were to visit New York or the suburbs of Philadelphia, or a farm in South Dakota, he would have no difficulty in recognizing the nature and purpose of an apartment building or a detached house.

It is well within the realm of the possible — if not of the expected — that in the next century or two the house will change as food and lighting and communication and transportation have changed. It may change in substance, in form, even in function. But it will not change suddenly. In the case of communication, even, the vast change has not been revolutionary in point of time; it has rather been evolutionary. We shall not jump from the present house in twenty years, perhaps not even in a hundred years, to one of different substance, form, and function. Whatever the future may have in store for us in these respects, progress will necessarily consist of improvements — gradual improvements — on what we use and know at present. Whatever may be the methods by which the materials of a house are assembled ten or twenty years hence, the nature of these materials, the form in which they are assembled, and the func-

tions the house will perform will not differ radically from those of today.

At present we are being shaken out of the doldrums of tradition by the radical proposals of Richard J. Neutra and Buckminster Fuller with their mast-supported houses, and of A. Lawrence Kocher and Albert Frey with their columnar structures. Our sluggishness in thought and action can well receive such stimulation as their suggestions give us. A more probable specialty of the near future is, perhaps, the trailer type — a permanent house on wheels, of trailer units adapted to a variety of uses, to climate, and to the pocketbook, and to our increasingly mobile life. Eventually we may be living more on wheels and in the air, in a wholly different kind of room and house. But history tells us that progress in the methods of house production will begin with minor and gradual changes in the materials, the structure, the function of the house as it exists today. No thoroughgoing study of house structure should ignore the fantastic; it sometimes has practical value and always stirs the imagination. But the plodding steps of evolution must be directed toward immediate improvement in the methods of providing what we know and need today. The house we know and need today is built of materials proved useful through centuries of time, and is planted in the soil — to which man himself is tied and upon the products of which he depends.

Individual initiative, always the prime factor in improvement, is stimulated and coordinated by organized effort. Cumulative progress in research has greatly increased scientific knowledge and technical improvement in recent years, particularly in this country. Not only governments and educational institutions have organized for such development, but individuals and corporations as well. Some of their efforts have been directed to the study and improvement of the house. As notable instances may be mentioned the testing of materials and processes, and the development of standards therefor by the Bureau of Standards at Washington. The Building Research Station at Watford, England, fills a somewhat similar

purpose for Great Britain. Following the recent withdrawal by the German Government of its support of *Bauhaus*, and its removal from Dessau to Berlin, that organized activity has been closed. The activity of *Bauhaus* was chiefly in the field of design both architectural and industrial, and only in a very narrow phase was it connected with construction; but for a time it was an effective effort toward improving the house. At the Forest Products Laboratory in Madison, Wisconsin, a division of the United States Department of Agriculture, extensive work is being done in creating new uses for wood, including its application to housing structure.

In this country the University of Illinois has contributed more to rationalize the house through research than, perhaps, any other educational institution. The focus at Illinois has been upon insulating, heating, and air-conditioning problems. Courses in building construction, such as those now offered at Yale University, Massachusetts Institute of Technology, and Hampton Institute, are also stimulating interest and progress in the use of new materials and methods. There is an increasing laboratory effort in this same field by numerous individuals and corporations. A considerable amount of such work, concerning itself especially with new materials, has been done at the Mellon Institute in Pittsburgh.

Another important phase of the effort to bring the housing industry up to date is indicated by such organizations as General Houses, Inc., of Chicago, and American Houses, Inc., of New York. Under a single contract these companies supply the buyer with a complete house, and even arrange in some degree for its financing. This is a form of unified service heretofore fulfilled in part by the speculative builder. In another decade or two, it will probably be common practice in the sale and purchase of new housing.

To stimulate this associated effort and to clarify its aims, we need a new conception of structural design. The development of such a conception is decidedly an engineering job, for it must satisfy all the factors of modern technique and the de-

mand that has arisen therefrom. It must involve the most elementary approach to structure, and at the same time the most comprehensive, for the resulting formula must not only take into account the diversity and complexity of materials, but must harmonize the house itself with social demand, productive forces, and the many varieties of type required. Only such a solution will lead to a general rationalization.

CHAPTER II

What Is Rationalization?

THE solution of the problem of housing production here presented is based upon a conception of structural design, rather than upon a new structure itself. It is so comprehensive that it might be adopted advantageously by all the housing engineers whose work has been reviewed and criticized — except those whose fancy has led too far into the future of new materials, form, and function. It satisfies the need for *complete* structural rationalization; it meets the requirements in bulk and form of the present and future American home; it supplies present needs and provides for future developments. In brief, it is a catalytic agent that can start the needed action in housing.

The grounds for this new conception, the means by which it can be developed, and the claims made for it are not arbitrary. They conform to the principles and requirements of rationalization. In Volumes I and II, attention has been called to the fact that rationalization is an ever-continuing process of conscious adjustment to the demands of evolution itself. Growing knowledge, improving technique, greater effectiveness in meeting the wants of human life are its impelling forces. Rationalization is the process by which the flint knife became the bronze axe, the plowshare was shod with iron, picture writing became the printed page; the walled towns of the Middle Ages gave way to unfortified villages; usury at impossible rates of interest was displaced by a more orderly banking and currency system; the hand loom yielded to the power loom, and home weaving to the cotton mill. It is the process by which a tool, a custom, a factory,

or an entire industry, having fallen behind, is brought up to date.

Every step in this process results from the interplay of natural forces, with the betterment of human conditions as a constant goal. And every step, whether involving a tool, a social custom, or an industry, has entailed innumerable lesser acts. Millions of such acts scattered over thousands of years were required to change the wooden plowshare into metal. Endless contributions made over centuries of time finally produced the present power-spinning machine, each step that brought it momentarily up to date being by the next one put behind. And when a whole industry is involved, the factors become indeed innumerable and the significance of each difficult to evaluate.

Although in definition "rationalization" clearly implies reasoned effort, the process of adjustment on the part of the individual may often be involuntary. It is a matter of common knowledge that many, if not most, advances in science and technique have come without initial focus on the part of an individual mind. But, whether consciously or not, every man is always trying to improve his own work and his living conditions with relation to those of others; and that effort is a part of rationalization in the large.

In a different and narrower connotation the term rationalization is freely used today in the sense of some method quite new and modern, found only in the Machine Age: it is applied to a particular process such as packaging, or to sales technique, or industrial organization. It indicates a one-sided effort to modernize. More broadly defined, rationalization is the ever-continuing, evolutionary process by which an activity, a custom, a technique, an industry is brought up to date, into balance, into harmony — that is, becomes rational with respect to other things. This book is but one small contribution to the process by which the housing industry, at present retarded, will be brought into line.

The foregoing definition is substantiated by eminent authority. As applied to deliberate effort in industry, the World Eco-

nomic Conference at Geneva, in May 1927, interpreted rationalization as:

"the methods of technique and of organization designed to secure the minimum waste of either effort or material. It includes the scientific organization of labor, standardization both of material and of products, simplification of processes and improvements in the systems of transport and marketing."[1]

This interpretation was only that of the Conference, its own conscious effort to harmonize world economic conditions with the latest scientific thought and technical attainment.

The Conference elaborated this definition to cover the complete application and implication of the idea. But questions of communal effort, internationalism, and the like are beyond the purpose of this volume. Although the author believes that an improved mechanism of house production will have an effect on our whole economic structure, his concern here is to establish a basis for the fundamental reorganization of the housing industry under present conditions and regulations.

Rationalization of the housing industry must clearly begin with the rationalization of the completed house, involving first the redesign of its physical units with a view to mass production, convenient transport, and ready assembly. Its objective is to provide suitable homes at reasonable cost for the entire population and at the same time to compensate all contributing producers as the existing economy, whatever it be, shall require. In the process of attaining this objective, finance, employment, purchasing power, rent, marketability, architecture, building regulations, the standard of living — that is, all the additional factors involved in the provision of housing, with the possible exception of land and taxes — will become rationalized. While land values and taxation are important increments in housing costs and rentals, they are governed by the political and social vicissitudes of a community. But in the cost of shelter the house structure is the major increment, as Volume II clearly shows;

[1] Report of the World Economic Conference, 1927, Vol. I, p. 48.

and that cost depends on the extent to which the house is rationalized as a product.

Many writers in these days are decrying the old economic order and suggesting new schemes. It is significant that most of these schemes emphasize better means of distribution, and are designed to utilize fully the productive forces which we have developed. With few exceptions they do not discard our mass-production mechanism; rather would they use it as it should be used — for the good of society. True, there are some who, decrying our mechanized age, suggest the possibility of returning to hand production. But such proposals are not taken seriously by the public nor are they making headway. Those who are genuinely striving to create a new economic order recognize that mass production has come to stay, and are confidently predicting its speedy appearance in housing.

The previous chapter called attention to the recent badly focussed and unrelated attempts at rationalizing this or that feature of the house. Much consideration has indeed been given to new materials and accessories. Rooms have been made sunnier, better ventilated, and less subject to the deleterious extremes of climate; architects are beginning to admit the trend toward mass production and to plan more for use and less for traditional appearance; more reasonable financing means are appearing, and the old ones have been subjected to a great deal of tinkering, with more or less success; legislators are attempting to make better homes available, especially to the poorer sections of the populace. But in all the welter of discussion and serious endeavor there has been no consistent effort to rationalize the basis of the whole housing problem — the physical building, and its structural design.

An analysis of the problem in any given industry depends entirely upon its position with respect to others. We have defined rationalization as the ever-continuing process of bringing things into line, and have pointed out the fact that most other industries are better mechanized than the housing industry. There is no question but that to rationalize housing is a most

complex and difficult task at best, and the delay has doubled the difficulties.

An inefficient, backward industry may properly regard as its immediate goal the mechanization of manufacture, a change from hand methods to those of the machine. An industry such as brick-making, which has passed into the mechanized stage but still consists of large numbers of small manufacturing units, may progress toward rationalization by integration and by the reduction of the number of shapes and sizes offered. An industry in which processes are reasonably well mechanized and the product is well integrated may find that it needs to develop its sources of raw materials or its distributive factors. And always there are pressing problems of relating both product and employment to the social and economic concepts of the times. The house-building industry stands on the lowest rung of the ladder. It is only slightly mechanized; it is not integrated; it is non-cooperative as to standards for its product; and it pays practically no attention to distribution.

The study of the history of transportation reveals many striking points of comparison with that of housing. In the matter of transportation, new means have created new demands. Looking back we can see that what the times needed was more speed and power than the horse-drawn vehicle offered. How much more, men could not guess. At first a locomotive engine with wooden wheels was hitched to a string of open barouches. Changes in the appearance of the railroad train (and changes of type in the automobile) followed mechanical improvements and the resulting changes in the method of production. The rapidity of development in transportation is a familiar story; but few have asked why the fundamental industry of housing remained unaffected by the magic of the industrial revolution. Machinery, mass production, modern commerce stand ready to lend their aid. In the matter of housing, what men need is lower cost and a broader market, but what they must use to effect these benefits, and many more, is a new method of design and construction. To what form and type of housing such a

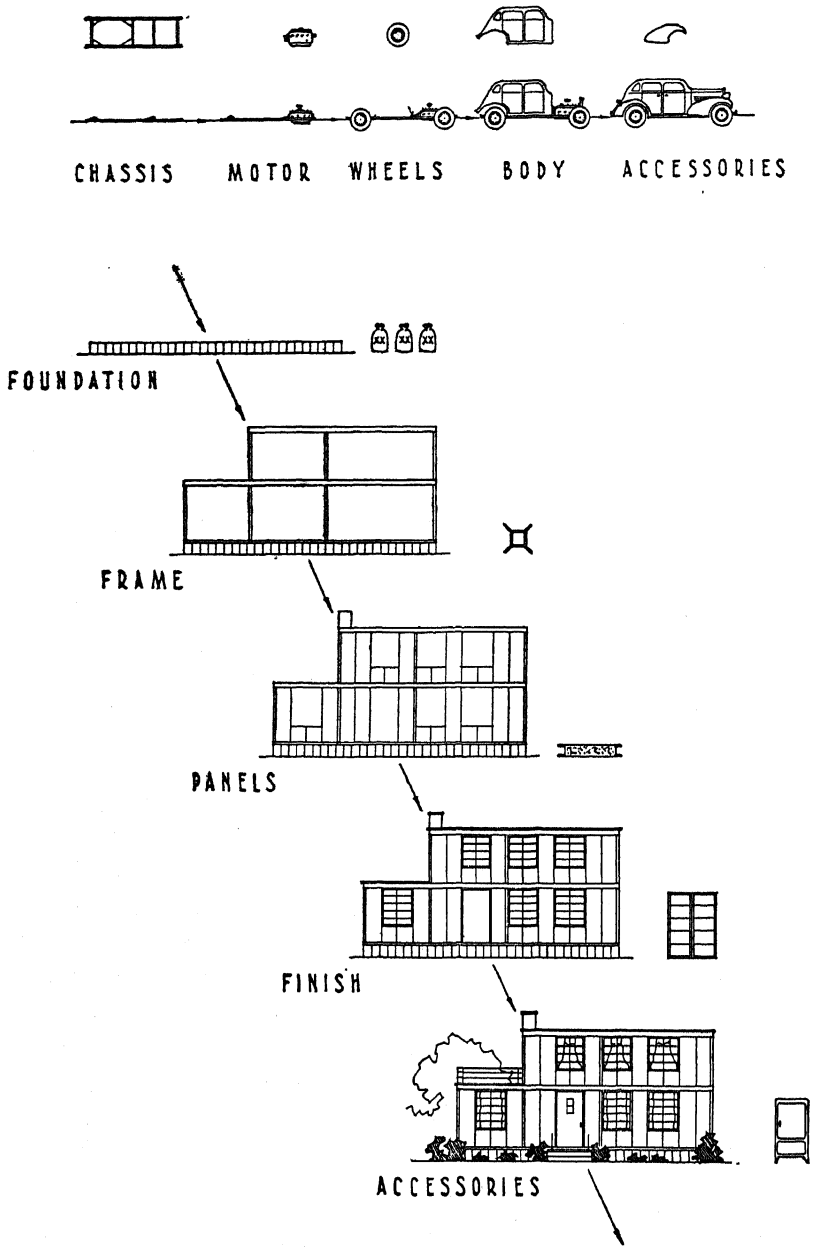

FIG. 2. COMPARISON OF PRESENT MOTOR-CAR ASSEMBLY METHODS WITH RATIONALIZED HOUSE ASSEMBLY METHODS

method may apply a generation hence, no one may clearly see. Our concern is to determine it and to adapt it to existing factors.

As indicated in our first chapter, attempts to modernize the house have been misdirected. The automobile industry, for example, did not reach its present development by ignoring the benefits of up-to-date engineering — in other words, by neglecting to improve on the 1902 chassis and engine.

But let us suppose the industry to be operating thus blindly. In 1000 automobiles the manufacturer effects some economy, but nothing comparable to that possible had he redesigned motor and chassis to make them really susceptible of mass production. Finding that 1000 potential customers will not buy 1000 identical cars, he gets extra paint, touches up spots here and there, and manages to move his product. The ingenious dealer concerns himself with devices to simplify the operation of the car. He puts in a self-starter and electric lamps; he adds a windshield wiper. To install each of these he must tear down some portion of the product as received from the manufacturer. The banker then offers to make the 1902 chassis cheaper by improving the methods of financing it, and by juggling figures he is able to reduce cost slightly. The politician becomes interested, and proclaims that " decent " motor cars should be available to all and must be sold at no more than a definite sum, and that in the meantime the government should pay a fraction of the cost of every motor car purchased in the next seven years. He does not state that the resulting debt must be met from the next generation through a general tax levy.

This farcical supposition offers comparisons not at all unfair to the house-building industry. No one is to blame specifically, since the rationalization of an industry is, as we have stated, a process of evolution. The house chassis is centuries old, and something besides the color schemes of an upholsterer and the economic theory, ancient or modern, of a banker must be considered if the product and hence the industry are to be modernized. In the automobile industry, chassis and motor have been

continually rationalized, and great economies have naturally resulted. There is every reason to suppose that the result for housing would be similar, and also that rationalization would not mean revolution. The automobile of 1902 was soundly conceived; we are still using the internal combustion engine. Study and redesign — one might say only reproportioning — from an engineering point of view have made it efficient and capable of simplified and economical production.

Accordingly, while it must be clearly understood that rationalization of the house may in time require a new *theory of structure*, the plan here offered is, as stated in the first chapter, only a new *conception of structural design*. It does not call for revolutionary changes in materials but for a radical improvement in the way structural materials are used.

In the manufacture of locomotives, for example, sizes and specifications accumulating since the time of Stephenson are controlled by an effort at standardization on the part of the American railroads. Through definite standards for axles, cast-iron chilled wheels, springs, couplers, wedges, and journal bearings, costs have been reduced, without decreasing the practical variety of the completed product. A constant effort to standardize accompanied by a constant revision of design, with a view to progress, are necessary to industrial advance.

The redesign of structure to adapt it to production by modern means is the first step needed in the rationalization of housing. The ideas and inventions reviewed in the previous chapter are contributions in the form of new types of construction or new materials, suited perhaps to mass production but failing to meet the major requirement of the problem — a unified conception of structure upon which all efforts could be focussed. Any such conception of structure must satisfy not only the requirements of mass production but the broad physical and social demands as well.

CHAPTER III

Mass Production and the House

REDESIGN of structure must provide for the needs of present-day living and at the same time anticipate what the future may require of the house. Analysis of demand must take into account not only the basic provision of shelter but the innumerable specific requirements of the occupant of the house. Any solution for the problem of housing in general must fulfill the reasonable desires of the individual and of the group. Rationalization therefore demands that the requirements of society itself and of individuals be coordinated and that any new conception of structural design answer in a single solution a miscellany of demands.

The variety of our American life calls for houses suited to widely different climates and topography. Our complex society requires that they be adapted to diverse ways of living — communal or segregated, in city or country, in large families or small, on a low wage or a comfortable income. Such houses must also satisfy our insistence upon convenience, upon cleanliness and healthful conditions. And, most definitely, they must keep step with the changeful and rapid rhythm of our life and meet the desire for personal expression, for individuality and variety in layout, in the character of accessories, and in appearance. However diverse these houses may be, in basic principle and general method of construction they are and must be one and the same. Sound consideration of their multiformity will discover an underlying uniformity, and upon this uniformity a rational principle of design can be based.

Our climate ranges from frigid to torrid, from the mists of

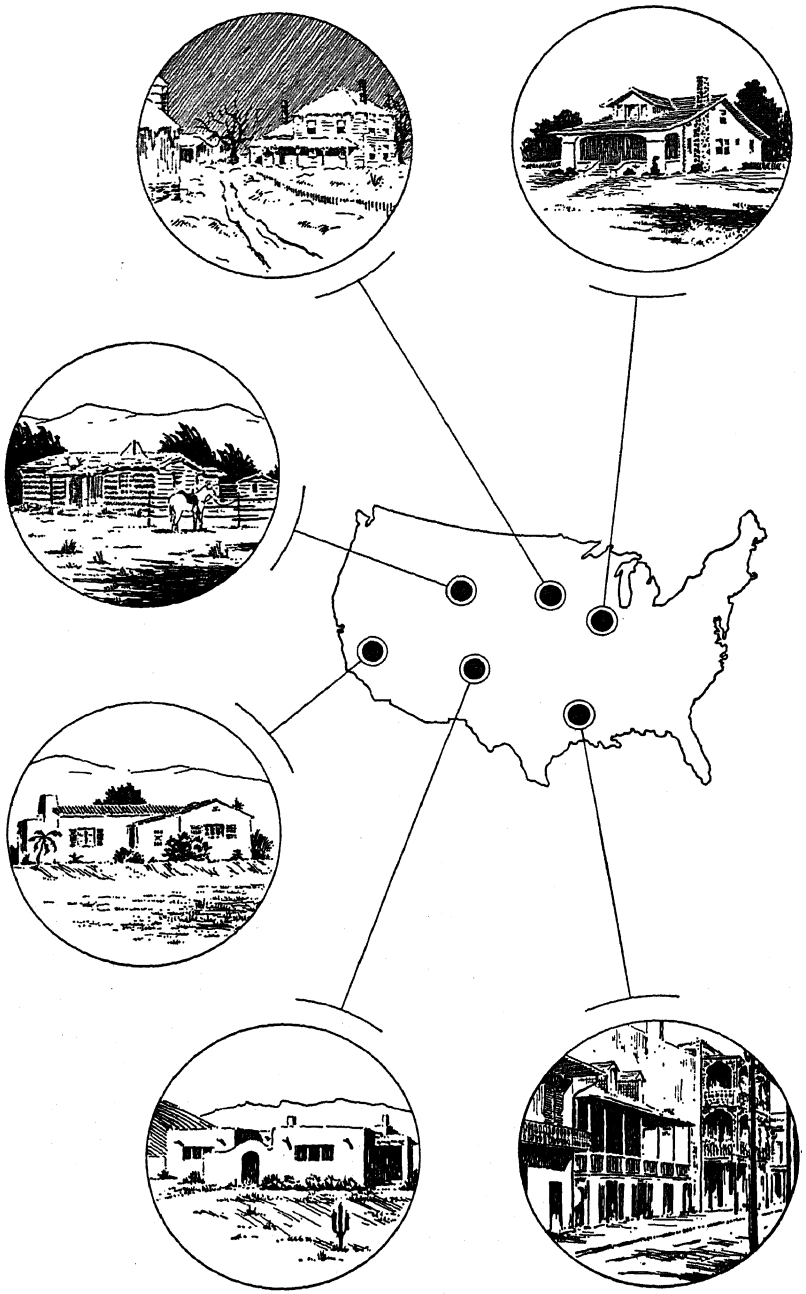

FIG. 3. REGIONAL TYPES OF HOUSING

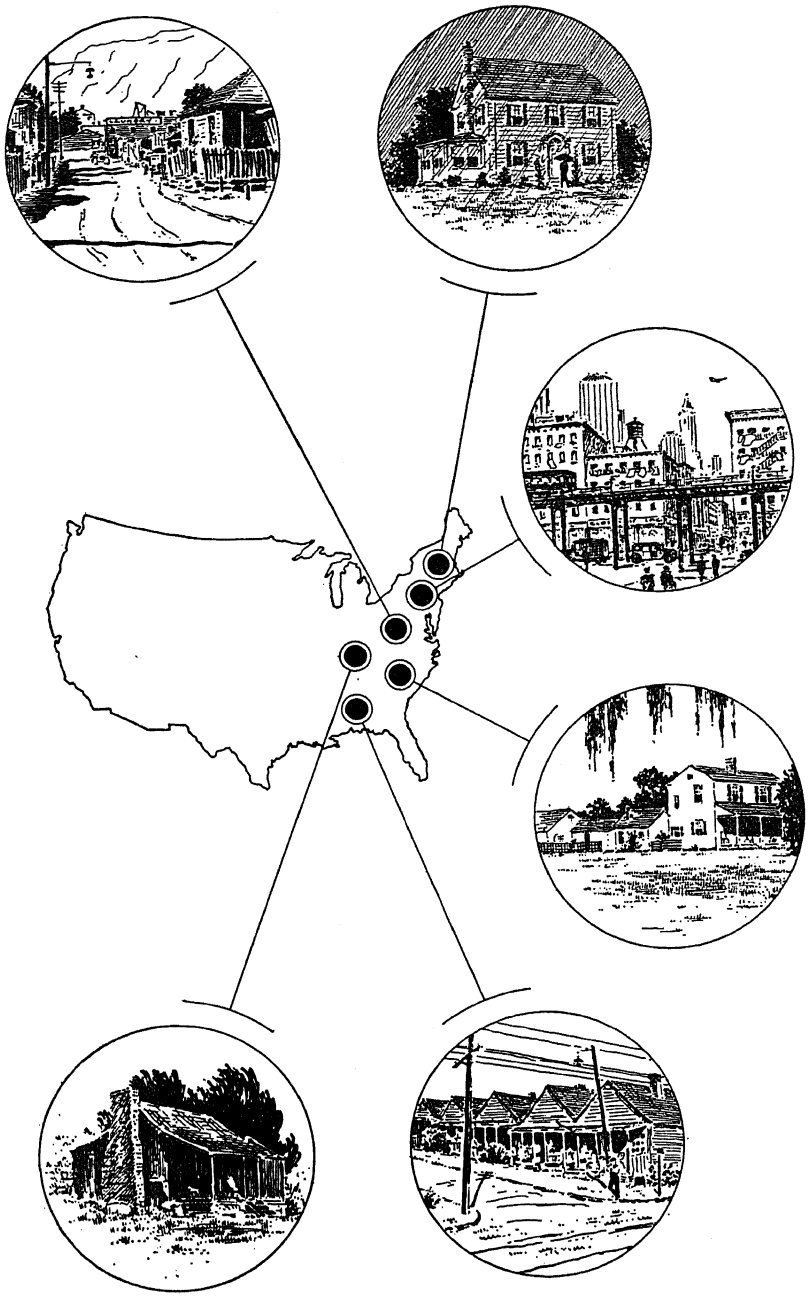

FIG. 3. REGIONAL TYPES OF HOUSING

Puget Sound to the constant sunshine of our arid Southwest. Even in single sections the extremes of temperature throughout the year may cover 140 degrees. Available materials vary quite consistently with climate. Timber does not grow abundantly in dry sections, and its use may depend upon — and alter with — transportation facilities and the development of local materials. The physical requirements of the particular topographical setting cannot be ignored. Foundations on a rocky ledge must differ radically from those on a sandy plain; and a certain conformity to landscape is desirable. The use of local materials may be prescribed by the prevailing tradition, and have esthetic value. Cellars and inclined roofs will not be desired equally in the North and the South, in wet and dry regions. But is there any reason why the same conception of structure cannot be applied even to such contrasting conditions?

The physical limitations imposed by occupational grouping and economic limitations define other characteristics of housing. A farming community in North Dakota must have very different houses from those that meet the needs of industrial workers in South Carolina or from those of the white-collared class of a suburban section. The city-dweller must find in tenement, block, or apartment house the home suited to his means and within reach of his job. But is there any essential difference in the basic design of these houses? They are all houses just as cat-boats, sloops, yawls, schooners, brigs, and barks are all sailing vessels. It is true that individual houses must meet the individuality of demand of the particular occupant and that any redesign of structure must be able to cover requirements that are apparently quite different and various. The house of today meets these demands, to be sure, but only through wasteful and haphazard methods of construction and through the installation of services and accessories only after approximate completion of the building. The separate demands must be coordinated and a form of structure offered that will satisfy them and simultaneously meet the requirements for economical manu-

facture and field assembly. By all the signs of the times that means mass production.

These demands cannot be satisfied through the present structure. Many designers and builders have tried to effect the necessary economies through the old form of building, and with some success, it is true, but without real progress or substantial accomplishment. The product must be analyzed, its shortcomings made clear, and the basis defined for its redesign.

We are concerned with form, substance, and appurtenances rather than with the size or the number of rooms. The ultimate forms desired are the essential factors in the problem; the size and number of rooms are merely a matter of arithmetic. Building structure in general, suited to housing of any size, is the focus of our present concern.

The dominant physical characteristic of the present-day house is its prevailing rectangularity of plan, elevation, and resulting volume. Houses are almost completely rectangular. Those of traditional design are essentially so in all respects except the roof, which, although usually a rectangle in plane, does not join the frame of the house at right angles. Those of "modern" design — representing an effort to give esthetic expression to the spirit of modern life and especially the mass-production urge of modern industry — are noticeably rectangular. The plan of a house, even when irregular, is made up of rectangles arranged in various relations. The mass of the building, in addition to being essentially rectangular, is broken down into minor rectangular masses. Rooms are usually rectangular, closets are rectangular; so, too, are chimney projections. Window, door, and stair openings are rectangular; stairs themselves are sets of rectangular blocks.

In the traditional house, roofs are usually inclined, especially in regions of snow and rain. In countries where there is but little cold weather, the slight pitches characteristic of Spanish domestic architecture prevail. In more northern regions, such as New England, similar pitches are not practical; in winter snow and ice collect on them and by thawing and freezing cause water

to back up into the house. English-type roofs and those of the North may be extreme in pitch; they are often very complicated in framing as well.

Improved means of insulation, of drainage, of waterproofing now make the flat roof quite practical in almost every climate; and its use means a saving in material, more logical use of interior and exterior, and probably lower cost.[1] Modern architects have shown that attractive dwellings can be built with such roofs. Although the pitched roof may be illogical in theoretical rationalization, it is a feature firmly entrenched in present demand by tradition, building technique, climate, or the use of local materials. The following paragraphs reflect the general opinion that the pitched roof is a continuing if not a basic demand of house structure:

"We will some day, it may be supposed, give up all our pitched roofs, be they steep or flat or gambrel, and roof our houses with flat slabs of waterproof concrete, or some new processed metal which will not shrink or split as it adapts itself to the hot sun of our long summers or the biting cold of our February nights; but when this occurs, and a pitched roof becomes to our descendants as fantastic as battlements on a stucco cottage, not only will we have lost one of our traditional habits of life, but our northern landscape will have lost the most picturesque accent (next to the church spires) which it possesses.

"The house with the flat roof is not necessarily ugly or even unpicturesque; there are plenty of houses in Tunis and Spain and Guatemala to prove that the flat-roofed house may have a charm and beauty all its own; but beneath our northern skies, within our landscape, we must have roofs that show."[2]

Although inclined roofs could always be supplied by traditional construction — should the redesign of the remaining ninety-five per cent of the house not provide for them — the

[1] See Appendix B, p. 317.

[2] Embury, Aymar, II, "Roofs — The Varieties Commonly Used in the Architecture of the American Colonies and the Early Republic" (Pencil Points, The Monograph Series, No. 1, Vol. XVIII, April, 1930, p. 251).

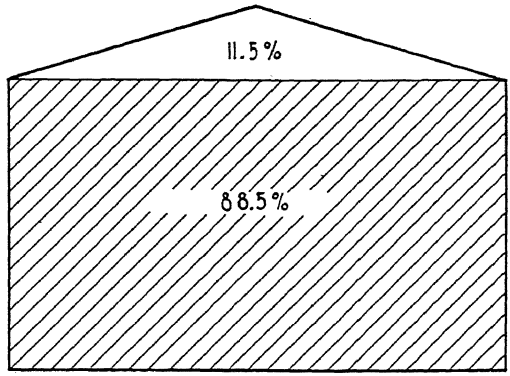

ALL HOUSING
100%

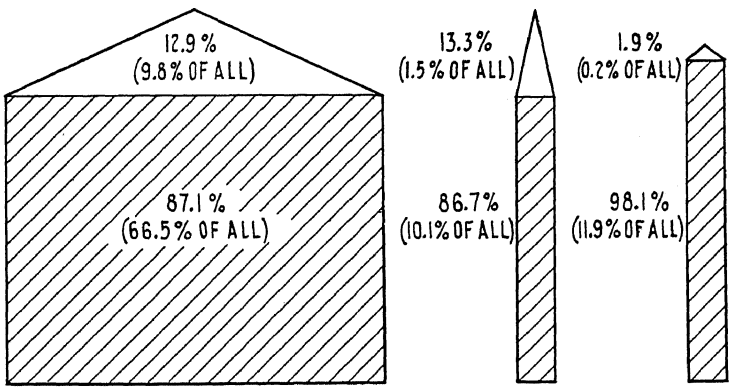

SINGLE FAMILY
76.3%

TWO FAMILY
11.6%

MULTI-FAMILY
12.1%

% RECTANGULAR

% NON-RECTANGULAR

FIG. 4. PERCENTAGE OF RECTANGULARITY OF VOLUME OF VARIOUS RESIDENTIAL TYPES, UNITED STATES, 1935 (Estimated)

author takes the precaution to reconcile his solution with this demand.

The other features in which the house of today departs from strict rectangular design are clearly unessential. Bow windows, arched openings, circular stairs are rapidly becoming obsolete. Oval rooms are seen occasionally, but they are usually made by furring out from a rectangular frame, leaving arcuate sections to be used for closets. Architects and designers, while they bemoan the passing of the arch, vault, and dome, freely admit that these are practically obsolete forms in domestic architecture. In the small house, where cost dominates the plan, right angles and straight lines prevail. But should future demand revert to the bow window, circular stairs, and the turret, these, like the inclined roof, could be built into and upon the new house quite as effectively as they were upon the old, because the new, like the old, will be rectangular in structure and form.

Rectangularity is far more than a feature or a tendency: it is a predominant quality, a controlling fact. Fully nine-tenths of the total residential building in this country is rectangular in form. Structure — walls, floors, and roofs — is so to an even greater degree. Even with a steeply pitched roof, a building may be ninety-eight per cent rectangular in structure.[3] Indeed, the right angle is so dominant a motif in the design and construction of the house that it is the prime factor in the solution of the housing problem. Rectangularity, and the standardization it permits, makes possible not only a rational design for the house of tomorrow but the mass production of its elements.

In America raw materials for building are already mass-produced for the most part. Lumber mills, steel and metal works, brickyards operate machines of enormous capacity by processes that are highly efficient; they turn out a product uniform according to a particular standard. But such products are in turn only raw materials for further manufacture and assembly into the completed building. For the automobile, a highly standardized product, the processes of further manufacture

[3] See Appendix A, p. 303.

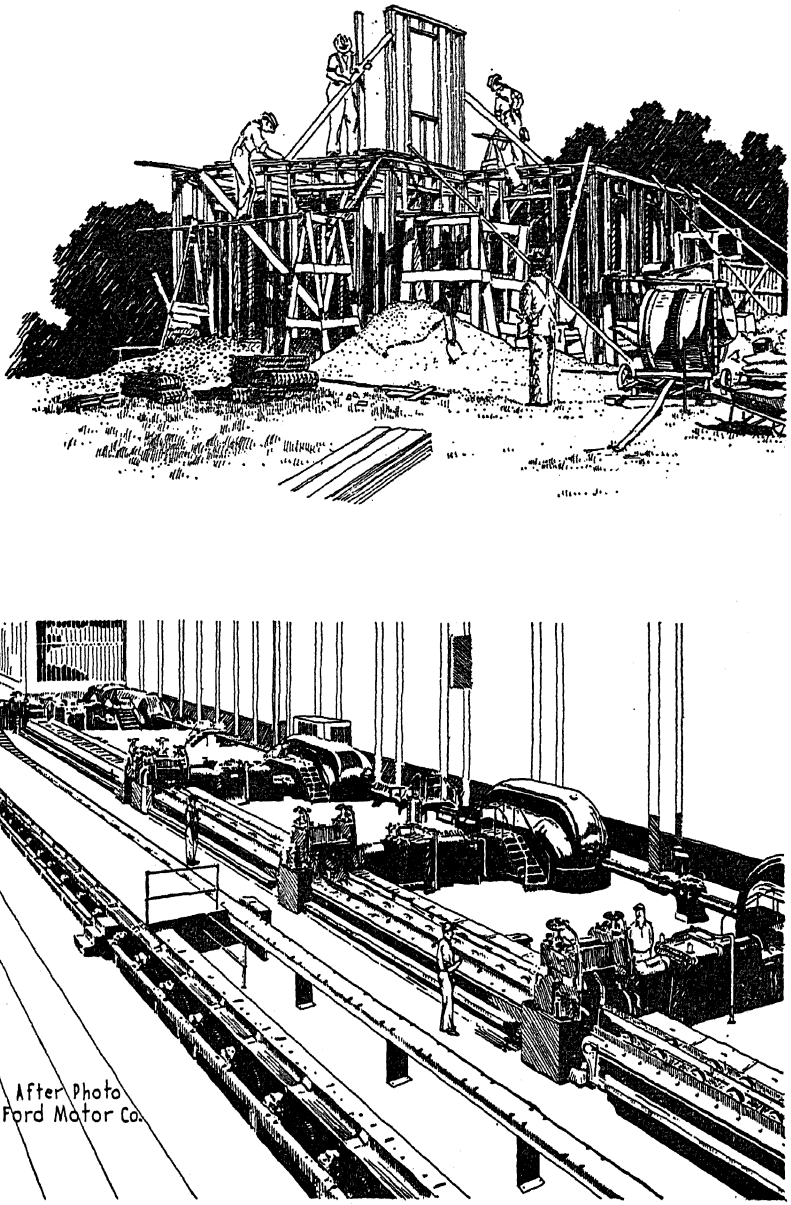

FIG. 5. CONTRAST BETWEEN HOUSE BUILDING AND MOTOR-CAR MAKING

The disorderliness of a typical house assembly and the order of the production line of a motor-car assembly plant

and assembly have been mechanized and coordinated. But the house is a product quite without any recognized relation between the whole and its various parts.

Methods of mass production cannot be applied to the house as a whole until its parts are standardized. The traditional house is a conglomeration of unrelated materials of all sorts, sizes, and shapes, put together on the site to form a composite whole. As just stated, we already have mass-produced raw materials for the house — lumber, cement, steel, bricks. We also have mass-produced doors, window frames, roofing, glass. But before these can be assembled they all have to be further manufactured. This is done at present on the site by hand means. The carpenters bring their saws and miter boxes; the plumbers bring their pipe-threading tools; the metal workers bring all their cutting machinery and their bender brakes. They insist that their work cannot be done in the shop because the dimensions for a particular part cannot be accurately determined except by measurement on the spot.

Efforts already made toward mass production of traditional structure are, to be sure, efforts to transfer work from the field to the shop; but, while small economies have resulted, no progress toward a broad solution of the problem has been made. The forms of masonry units, concrete blocks and tiles, have been changed to facilitate field erection; parts of a wood-frame house have been pre-cut in the shop; story-height panels, supplying both structure and finish, have been designed. In fact, such methods have been used for many years; but they remain ineffective because they do not rightly adapt the structure of the house to manufacture in the shop.

At present the only effective form of mass production for the house is that found in a large office building or a group housing project. In these cases, a locally concentrated mass demand brings about a certain degree of mass production. The economies possible in such instances are those of the repetitive manufacture and erection of great quantities of parts, each of single size and character. Although such economies are substantial as

compared with the separate erection of a single house, the total savings resulting offer no real solution for low-cost housing. The mass demand upon which they depend is seldom to be found or created.

The economic effectiveness of such efforts at mass production is achieved without necessarily involving esthetic values. The esthetic results will be good or bad according to the architectural treatment. The standardization of parts necessary to effect economies need have no vital effect upon attractiveness. To effect economies it is not necessary to build long rows of city houses of uniform plan and design, such as those in Philadelphia, Baltimore, and other cities in this country and Europe as well. These are inevitably monotonous and often ugly in the extreme. In most countries in Europe — notably Germany, Austria, Holland, Sweden — such ill-designed group housing has given place to developments of a most advanced type socially and esthetically, promoted both by government and private means. Developments like that at Becontree in England, of coordinated design, ample clear spaces well landscaped, and a well proportioned, harmonious grouping of the various units, may be very attractive. Comparable examples in this country are Sunnyside, Long Island, Radburn, New Jersey, Chatham Village near Pittsburgh, and Mariemont, Ohio; and many projects recently initiated will perhaps result in equal advance. The economies effected in all such instances are similar. They come from the repetition of units of single design, so that the question of esthetics is not influenced for good or bad by the method.

So far, efforts to effect economies by mass-producing the traditional house have failed, and inevitably. The old house was made by individual means for individual demand. The new house must be made by mass means for mass demand. But the composite house is not adapted as a unit for complete manufacture and assembly in the shop. Even if transportation for the completed product were practical, nothing would be gained by building the house in the shop in this same uncoordinated fashion. Even though a particular shop concentrated on the pro-

duction of but one house design, its product would still be the same illogical house that was assembled on the site by the old cut-and-fit methods. The reorganization that housing needs — and the redesign of structure here presented — is not a change of process. It does not suggest merely transferring to the shop what was previously done in the field. The parts of the house must be given the new forms and features required for versatility of design, economical mass production, and ready field erection.

What, then, do we mean by mass production in the housing industry? Not mass-produced raw materials: we have them now. Not mass-produced houses, fabricated entire in factories, for the house as an entity is not adapted in bulk or weight to manufacture in a shop or to transportation and erection at a distance. Nor does a room unit answer the requirements. A smaller unit, both of design and structure, must be found in some further subdivision of the composite house.

Even in a civilization where the individual more and more demands what others have — and in the same shape, size, and color — mass production in the building industry need not mean houses identical in plan or appearance. In the case of the automobile, similarity of appearance has been the desired as well as the logical result of mass production. But the house continues to be the oasis of individualism, and it is to be hoped that we may never see the day when every man's dearest wish is to pick out from a catalogue a home that looks exactly like his neighbor's. In order that individuality of demand may continue — and be fostered among the lower-income groups — the principles of mass production must be applied not to the completed house but to standardized units for it — to the elements of structure that may be assembled to form *any* house. When standardized parts for the house are uniform and interchangeable, even between different systems, they can be so assembled as to permit variety both in plan and appearance, and they certainly can be mass-produced.

The connection between standardization and mass produc-

tion, between mass production and rationalization, is implied by the words themselves. Although no one has formulated completely the theory of mass production, the various points that mark it are perfectly well understood. System, accuracy, and power are utilized in mass production to the fullest possible extent; waste and guesswork are eliminated; continuity of process and uniformity of product are secured by various means; speed is made possible. As embodied in standardized production, machine production, and quantity production, it usually results in low cost of the commodity and a wide market.

Perhaps no one has expressed the principles of mass production more clearly than Henry Ford.

"The term mass production is used to describe the modern method by which great quantities of a single standardized commodity are manufactured. . . . Mass production is not merely quantity production . . . Nor is it merely machine production. . . . Mass production is the focussing upon a manufacturing project of the principles of power, accuracy, economy, system, continuity and speed. The interpretation of these principles, through studies of operation and machine development and their co-ordination, is the conspicuous task of management. And the normal result is a productive organisation that delivers in quantities a useful commodity of standard material, workmanship and design at a minimum cost. . . ."[4]

Mass production involves the application of time, space, and mass measurements to particular materials, the physical properties of which must be amenable to such measurement, and building materials do not, as is popularly supposed, offer particular obstacles to mass production. They are, to be sure, relatively heavy — that is, as compared with the parts of a watch — and the processes by which watches are mass-produced are not directly applicable to housing production. The processes by which rails and metal parts are made would be more applicable, as the materials and methods of handling them are similar. Building

[4] The Encyclopaedia Britannica, 14th edition, 1929, Vol. 15, p. 38, "Mass Production."

materials are also of many kinds. Some are carved out of native pre-formed substances such as wood and stone; others, which may be called synthetic, are molded, whether on the site, as is concrete, or in the factory. But the problem of making house parts of these materials is broadly that of the manufacture of solids, of adapting them to the specifications of mass production through the analysis of operations and the use of mass-production tools and methods.

For such products the primary requirement, found in most mass-produced articles of a major type, is that materials shall be uniform in cross-section at right angles to their length. This permits the rolling, pressing, or molding of a material or unit in a continuous straight-line flow as a uniform product adaptable to further processing. Such uniformity is implicit in multiple-process machinery, and is already to be found in the cross-section of lumber, structural steel, the flow of synthetic materials from the mixer, or in substances cut down from larger matrices, such as boards run through a planer or a series of saws. Wires and pipes illustrate still other products and methods of manufacture in which this characteristic predominates. It should be noted that "length" does not necessarily imply the longest of the three dimensions. "Length" as here used means the dimension along the line of travel as the member goes through the machine. It may be any one of the three dimensions of a member.

A second requirement in the mass-produced product, shown in comparable commodities, dictates that features that are to cut into the uniformity of cross-section or mark the surface in any way shall be of a repetitive nature according to some particular gauge or in serial multiples of it. In other words, the spaces by which markings are separated along a unit in any of its three dimensions must be identical. This principle, which permits continuous flow of process and assembly, is simply exemplified in the printing of paper or cloth run through a printing machine over rollers with devices that apply a repetitive imprint. The present-day mass-production brick mold cuts off at

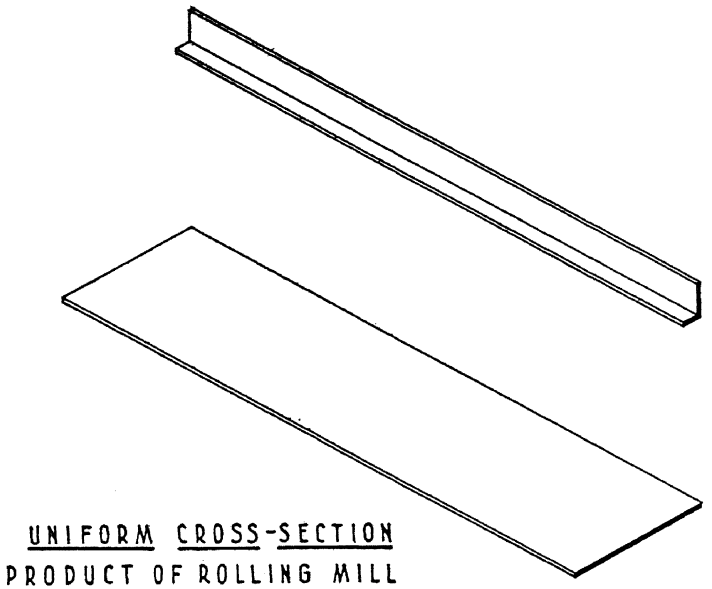

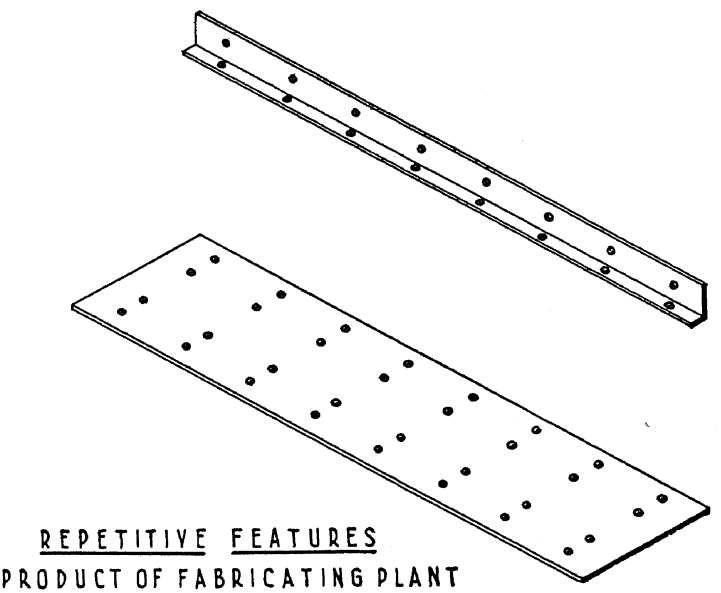

FIG. 6. THE TWO PRIMARY REQUIREMENTS FOR MASS PRODUCTION

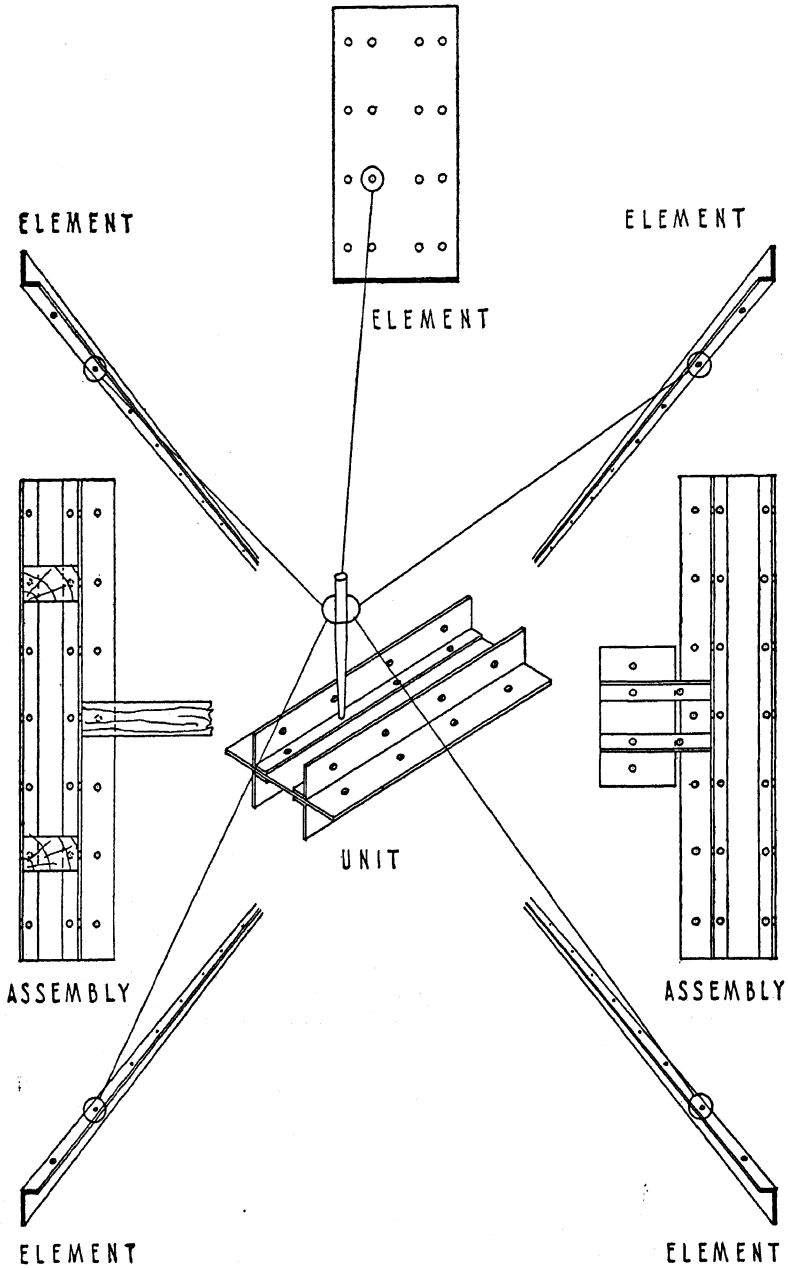

FIG. 7. REPETITIVE FEATURES AN AID TO ASSEMBLY IN MASS PRODUCTION

gauged intervals the thread of brick extruded from the mixing machine. The vibrating shuttle in a loom places a given number of weft yarns in the warp. In twisted yarns, twine, and rope the same characteristic is found: so many twists in a given length.

This second requirement is directly related to the first. In other words, repetitive marking, cutting, and punching require a continuous flow of material of uniform cross-section, and, depending upon the nature of the material and the requirements of the finished product, such features may be introduced more or less coincidentally with the first process or subsequently. Such features may be introduced by the jig method, or by a method of gauged punchings or marking devices and a jig to space one series of punchings in gauged relationship with the next series. The multiple boring of wood or synthetic material or metal sheets is done by the gang-machine method.

This second requisite for mass production is of prime importance to the problem of construction. It defines the means by which the interfitting relationship of all parts is provided, — whether in the assembly of finished parts on the site or of the elements from which those parts are manufactured in the shop. Repetitive means of jointing, for example, introduced along the " lengths " of members give uniform parts that may be assembled at once in any degree of the order of the gauging. And when the practical determination and interchangeability of parts without special hand cutting and fitting is achieved, mass-production methods can be applied in assembly until the product stands complete.

The matter of assembly is of great significance in the rationalization of house construction. Like bridges, houses must be finally assembled on the site, and, if by modern methods, must be fully manufactured in the shop and provided with suitable jointing means. Buildings should not be built up bit by bit, as at present, from raw materials dumped on the site and there cut and fitted by hand. The lack of general success for the pre-cut house is but one proof of the fact that more of the work of further manufacture and assembly must be transferred from the

field to the shop. The mass production of standardized, uniform elements, with secondary and jointing means uniformly applied, will make this transfer possible. In full mass production for the house the combining of elementary parts into composite parts, completely ready for final inclusion in the house, must be done in the shop; and the work must be accomplished by what may be called the rhythm of assembly, insuring a continuous flow of process.

In practice, other methods of mass production may also be made use of for house parts. Stamping or drop-forging is obviously for lesser features — interconnecting means or jointing means or positioning means. Another process adapted to mass production is that involved in the circular or cylindrical form — parts made on a turning wheel, for instance, or extruded, as wire or pipe. The circle is an easy thing to mark out; it is defined by the revolution of a wheel, the compass. Painting, grinding, polishing, and the like are also susceptible of continuous operation.

But such processes need no detailed discussion. That they are required may be taken for granted. Nor need we discuss the important requirement of mass production that the number of individual operations involved in manufacture be reduced to a minimum. The multiplicity of shapes and sizes must be restrained; the stocks of tools, dies, jigs must be limited; the sequence of processes organized. The manufacturer's task will not be a simple one. It must involve the consideration of materials, practical sizes and weights for handling and transportation, and countless other factors. Yet he can deal with the practical task, once the product is defined. At this point it is our sole concern to present a design for structure based on parts standardized to a unit of measure in order to make low-cost housing possible.

And esthetic values are not imperiled by the definiteness of this proposal, for strangely enough the mass production that rejects variety in process provides it in the finished product. Individual units of the same kind, obtainable in sizes varying

from each other by a relatively small dimension, will permit flexibility of design yet offer no obstruction to mass production or assembly. Progressive-minded architects are not gloomy as they face the new era of mass production for the house. They definitely desire a precision of pattern that will harmonize with machine forms. Already they are anticipating mass-produced forms in their use of boldly rectangular outlines. They are looking eagerly for the engineering means of making freely available for the habitations of the people in the new era a wealth of substance, texture, line and mass, of surface, color and effect.

Full mass production of houses is made possible by the two main principles of mass production described. And not only this. They provide also the concrete detail upon which actual mass-production processes and this new conception of structure itself can be based. These two characteristics of mass production — uniformity of cross-section at right angles to length, and repetitive features positioned along the " length " according to a stated gauge — are not two parallel lines of theoretical proposition. They meet in a finite unit. If the uniform cross-section and the gauge are to be applicable to three dimensions, a cube is necessarily defined; the cross-section is a square; and the gauge is one of the sides of the square. One interchangeable unit of measure is found only in a cube. In other words, the parts of a house may be mass-produced and mass-assembled if they are designed on a cube module and therefore may be represented within the complete structure by multiples of this cube.

CHAPTER IV

Standardization for House Parts

ALTHOUGH the principles of mass production just discussed definitely indicate the cube as the module or unit of measure for standardizing the house and its parts, corroboration for such a module must be found in an analysis of the house itself. The new method of design must establish this module, or standard unit of measurement, on existing structural theory. This book therefore presents a redesign of structure that adopts, substantially, existing forms and proportions, and does not necessarily impose the use of any new material.

The standardization of house parts is primarily a matter of dimension. Important as are the physical and chemical properties of materials, form and size are the first considerations for standardization and the interfitting relationship necessarily involved. House parts standardized to meet the requirements of mass-production methods must be so coordinated that through selection and grouping an unlimited variety of houses can be assembled. Standardization must, therefore, be applied to house parts, not to the house itself.

The use of a linear module in building design is as old as architecture, but its application has been architectural, not structural. It defined the dimensions of the completed mass, not the structural elements of which the mass was composed; and the module used for vertical dimensioning had no necessary relation to the horizontal. The module required by present conditions is one for the design of structure in all its correlated parts, and, to conform to the demands of mass-production technique, the

module for structure must be a cube. Also, its initial application must be to familiar building materials and their conventional use, although new forms and new materials may prove better adapted to new purposes. The present problem is to standardize house parts by determining a practical relationship for the elements of building structure.

This relationship must be sought in the actual dimensions of houses as built today. A basis must be found for the redesign of house parts, for their standardization by the reduction of variety in sizes and shapes of parts. Parts must be manufactured repetitively and not individually, and similar parts must be strictly interchangeable. Although their variety will, therefore, be limited, it can still provide complete flexibility in the final product, the assembled house. If a unit of measure can be found, a greatest common divisor of all structural dimensions, every measurement in the house or in each member of it can be expressed in terms of that unit, and in integral relationship to it. To rationalize the traditional house, a means of adjustment is called for, a unit of measure, an actual quantity as simple, self-evident, and elementary as the arithmetic from which the term is borrowed.

An examination of houses as they are built today shows that there is no such unit of measure. Dimensions of houses vary infinitely. It is quite common to find, even in plans, such dimensions in a living room as, say, 16′–3¼″ x 12′–4¾″. Those particular dimensions may not have occurred in this relationship in any other house that was ever built. They are accidental, and further accident may alter the final measurements from those specified in the plans. In the layout of the house there is no unit of measure generally used by architects or builders, either horizontally or vertically, either inside or outside. There is a tendency to plan the outside of a house in dimensions of even feet and half feet, or in multiples of three or four inches, and the same is true of room layouts. These dimensions, however, are purely nominal, and final measurements vary so persistently and widely that in the completed house there are few,

if any, definable relationships between dimensions. The architect may want a certain proportion between openings and wall surfaces in the façade of the house. But the limitations imposed

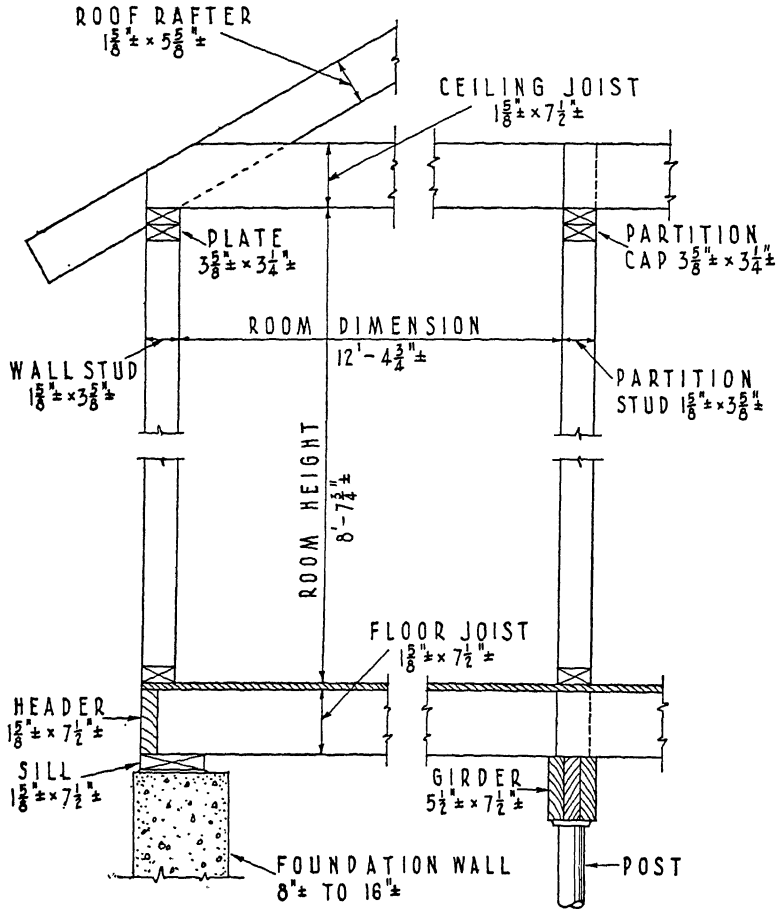

FIG. 8. DIMENSIONS OF TYPICAL WOOD-FRAME HOUSE STRUCTURE
(Platform Type)

by the architectural conception and the materials available to carry it out are unsuited to produce the related dimensions essential to the standardization of parts. The use of a given material such as brick or variations in the thickness of wall studs

may prescribe certain measurements. Some units for the house are now mass-produced in " standard " sizes, but the sizes have no relation one with another, and cannot readily be reconciled in assembly. No concerted effort has been made and no method devised for the coordination of sizes in the plan of a house and its exterior.

Such efforts as have been made in different countries to standardize building materials have been too limited in scope. They have been concerned with specific materials rather than with the finished house. Although the effort of the Department of Commerce to standardize materials and simplify commercial and industrial practice, begun under Herbert Hoover as Secretary, very greatly reduced the number of sizes in building materials, these are still made in far too large variety and with too little correlation with one another. In Japan the use of " mats " provides a standard unit for floor plan. In other countries — particularly where, as in England and Germany, the government has taken a hand in the matter — room layouts, and even whole floor layouts, have been standardized for repetitive use. But no nation has met the problem of standardization of structural design.

Standardization has already gone far in the manufacture of individual building materials, and an approach to rational mass production for house parts is to be found in steel and lumber mills and in sash and door factories. Steel beams are passed through the same rolls into the same sizes day after day and cut into specified lengths; thousands of identical doors and windows are produced in the course of a year. The advance in method and economy thus achieved is outweighed, however, by the fact that the standards of dimension governing different industries are not identical. The particular parts may be standardized within the particular industry, but often they bear no relation to those of other industries.

A few attempts towards the coordination of individual standards should be noted. For years the makers of metal windows and doors and the makers of brick have been trying to get to-

gether on some plan for standard masonry construction that will bring the sizes of metal-frame windows and doors, mass-produced in so-called standard sizes, into harmony. For a brick laid in the wall, centuries of tradition have defined a vertical module largely unrelated to its horizontal dimensions. It is true that bricks as laid in the wall have been made in a 1–2–4 relationship, also in a 1–1–2 relationship; but this is the exception, and present practice — both structural and architectural — shuns it. Brick manufacturers, in cooperation with the Bureau of Standards, have been trying for some time to develop a module based on center-to-center joint dimensions, the only dimensioning feasible with brickwork. One of the earlier proposals called for a two-dimensional or plane module measuring 2¾″ vertically and 4¼″ horizontally. The most recent recommendation from the Bureau of Standards corresponds very closely to the recommendation of Frederick Heath, Jr., made in 1932 and again in 1934, of 8″ x 4″ x 2⅔″. In practice this means a superficial wall module 8″ horizontally by 8″ vertically. This is obviously too large a unit, and it imposes too great a limitation upon practical house design and the use of other materials. An adequate solution for predominant materials need not be fully adapted to all the characteristics of each, but it should satisfy most of them — and in all three rectangular dimensions. If one module could be defined for all types of construction it would obviously reduce the excessive number of variations in dimension, and provide a permanent basis of adjustment and cooperation.

There is nothing in the form of the traditional house to prevent the standardization of its parts. It is sufficiently definite and uniform in shape and structure to be subject to perhaps as high a degree of standardization as the automobile. Hand methods are partly to blame for the present situation. The process of house construction is so difficult and costly partly because of the hopelessly disorganized method of field manufacture and erection. Hand methods are used to prepare materials; waste is taken for granted in cutting and fitting them for assembly;

and to install services and accessories, elements already assembled are damaged to an extent as absurd as it is unprofitable.

It is hard to believe that any other industry would accept such wastes as a matter of course. It is difficult to see how a situation of so little advantage to anyone can exist in this day of rational adjustment. The original motor car was, to be sure, an engine hitched to a buggy, but the present assembler of motor cars would hardly accept from the manufacturer parts made according to the latter's whim as to size and shape, quality and tolerance. Yet this anomaly is unquestioned in the housing industry. The architect plans for tradition and appearance; the manufacturer works on independent specifications; and to coordinate plan, labor, and materials the house builder must cut, fit, and patch on the job with inevitable yet unjustifiable waste.

But the situation may be more justly blamed upon the recalcitrant nature of existing building materials. The difficulties inherent in the nature of wood, stone, cement, tiles, and metals have made traditional structure the complex, irrational thing it is. These materials present, in their miscellany, a very great obstacle to standardization and mass-production methods. Scientific mass production must begin its work with the substance of materials; each has qualities and limitations, advantages and drawbacks, that must be considered in adapting it to standardization. In the traditional house, materials have been used in a patchwork that laboriously incorporated substances of all sorts, whatever their discrepancies and deficiencies. Practical difficulties in construction are directly due to the widely varying properties of materials physically incompatible. If all desirable building materials were constant in dimensions, regardless of temperature or moisture, structural design and standardization would be simple. Fixity of dimension alone would make economical and rational the use of all the materials now available, for each would function in its own best way.

The problem is how to combine heterogeneous substances into a unified building. Modern methods must take into account the very changeable dimensions of wood across the grain; the differ-

ent coefficients of expansion of various metals; the fact that some substances change with heat, some with moisture, some with both heat and moisture; the fact that wood will not bond permanently with cement, nor with steel, plaster, paper, or tile; the fact that contact between different metals may involve deterioration through hydrolysis. While an intimate knowledge of these properties is necessary to the appropriate use and nice standardization of materials, the immediate problem is to determine the interfitting relationship that is essential to standardization.

The first steps in determining a practical unit of adjustment upon which standardization may be based are analysis of structure of the traditional house and classification of its parts as to form and function. In an elementary sense the house is made up of walls, floors, and roofs. In actual construction, however, these intersect; and they must be aligned, positioned, and joined before they can form a stable and complete construction. They must, therefore, be classified in two divisions: parts that form the ultimate walls, floors, and roofs, and members that, at their intersection, provide alignment, positioning, and support for them. The latter constitute the main framing of the house, and include posts, girts, sills, and plates; the former include the wall, floor, and roof constructions that supply filling, in which studs, joists, and rafters are supplementary structural elements.

Such classification provides a basis and general analysis of structure, though ignoring, perhaps, the demands of masonry construction. In the pure masonry types, with exterior supporting walls of stone, brick, or concrete blocks, framing members are largely integral with the masonry. In such constructions aligning, positioning, and joining are effected, course by course, through the chalk line, plumb bob, and hand rule — a method at variance with mass production. But pure masonry types are no longer an important factor in American housing. Though brick, concrete blocks, and even stone, are still extensively used for outside walls, they are aligned about the in-

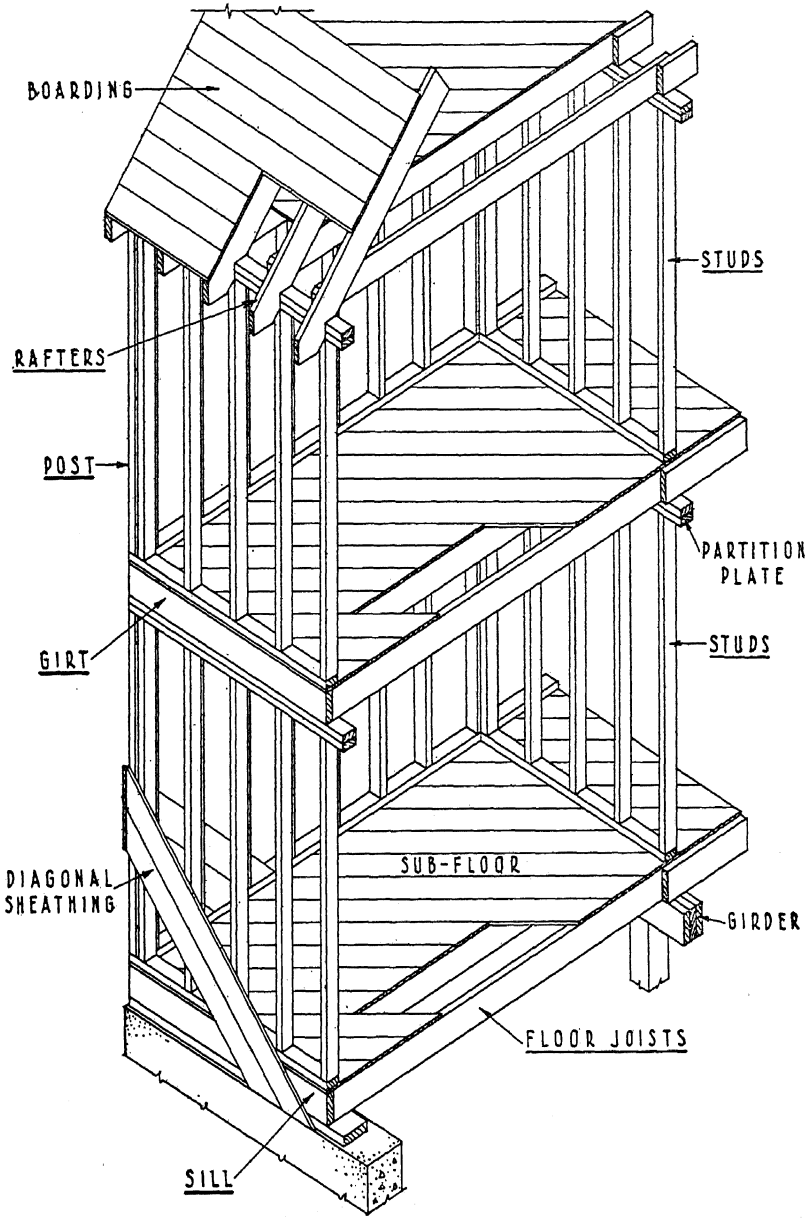

FIG. 9. PRINCIPAL PARTS OF TYPICAL WOOD-FRAME HOUSE STRUCTURE
(Platform Type)

terior framing of the house, whether that be of the usual wooden type or of steel or composite type. Our search for a unit of design upon which all structural types can be standardized may ignore the demands of the pure masonry type, knowing that a solution for the predominating frame type would, at the same time, virtually solve the problem for the masonry type.

In the traditional frame house, joists and studs, while parts of filling members, perform the additional function of load-bearing and of aligning purely filling elements. In the more recent types of panel construction, joists and studs incorporated into composite floor and wall units are eliminated as separate members. Attempts have also been made to eliminate posts, girts, sills, and plates as well, by systems of self-aligning panels. But the classification given will still apply to these if it is considered that those portions of the panels, common to the different planes of the structure and located at their intersections, must function and may be analyzed as aligning, positioning, and supporting members.

Each structural part must thus belong to one of the two general classes, depending upon its particular function of framing or filling. In addition to these particular functions, there is a general function or provision to be performed by each and every part. As its first function, a wall member must define a part of a wall; a framing member, such as a post, must provide support or alignment between two or more walls. And in addition, every such part must provide for jointing, since the function of jointing must be common between it and any adjoining part, whether of the same order, as in the case of two wall members coming together, or of a different order, as a wall and a girt.

The second step in finding a unit of adjustment for housing structure is to examine the dimensional relationship between the parts just classified. The greatest common divisor of their dimensions as they are found in the traditional house is very small. If the calculation be made on nominal dimensions, the common unit of measure would be perhaps ¼″; for actual

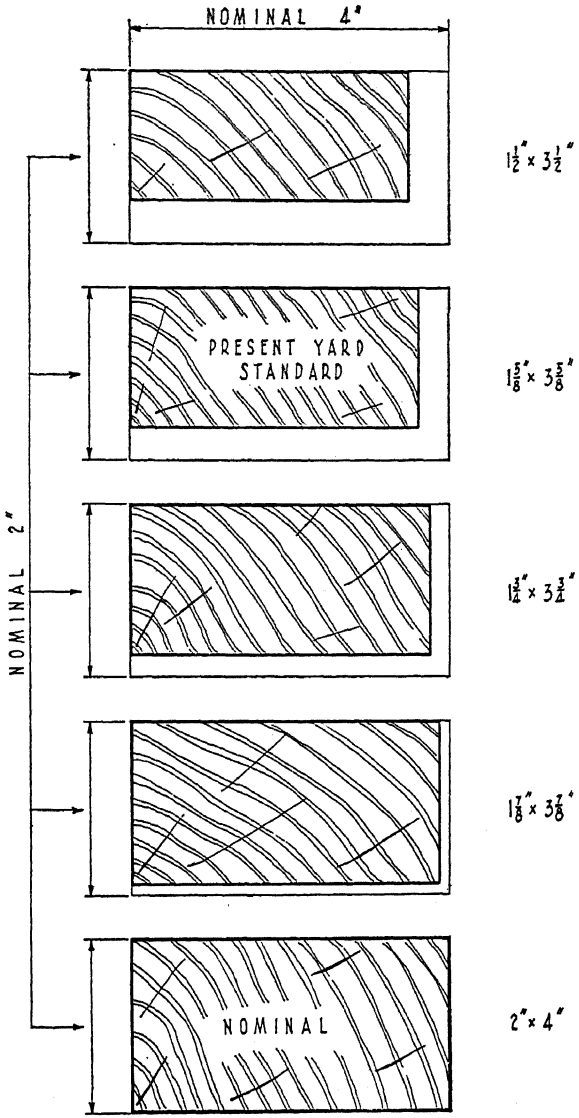

FIG. 10. COMMERCIAL VARIATIONS IN SIZE OF NOMINAL 2" x 4" WOOD STUD

This drawing shows cross-sections of nominal two-by-four's obtainable in various yards prior to adoption of the Recommendation of Division of Simplified Practice, United States Bureau of Standards. All studs are now supposed to conform to the present yard standard (1⅝" x 3⅝"). Actually, there is nearly as much variation as before and even when the recommendations are faithfully followed the studs vary materially according to their degree of moisture content and the condition of the producing plant

measurements the unit would be even smaller. Studs, although nominally 2″ x 4″, vary in almost infinite degree with the condition of the producing plant and with the moisture content of the wood at the time it was cut to size in the saw mill, and on this basis the unit would be infinitesimal. In any case, it would be too small to serve the purpose of reducing the present variations in sizes to a suitable number for practical production. Some definite relationship must be found whereby the dimension of the desired module may be established and the number of sizes of structural elements brought within control.

But before these elements can be standardized and related, it is necessary to find a linear dimension which when integrally multiplied will satisfy the essential dimensions of the modern American house — its layout of rooms, door and window openings, and the proportions of its walls, floors, roofs, and frame members. Vertical as well as horizontal cross-sections will present the problem graphically, and to narrow the search, the focus is upon the major type only — the American wood-frame house.

Although wood-frame construction appears to have no common unit of measure, the cross-sectional dimensions that satisfy the mechanics of structure, beam strength, post strength, and the other requirements of different materials, suggest a simple relationship of a modular character. Cross-sections show that the smallest linear dimension of house structure is the horizontal thickness of the structural wall. The thickness of the floor and flat roof is double or more that of the wall, that of the pitched roof not quite double. In length and width, walls, floors, and roofs are obviously so much greater than the wall thickness — twenty, fifty, or a hundred times — that in practice an integral multiple might be used without in any way altering their general appearance or affecting the fulfillment of their particular functions. As the dimensions of the main framing members normally define those of filling elements, the same simple ratios apply to them also. Even the thickness of the foundation wall is customarily two or three times that of the superstructure.

In the typical American wood-frame house it happens that the nominal thickness of the structural wall is 4″, as defined by the 2″ x 4″ cross-section of its wall stud. The thickness or depth of its average floor is nominally 8″, although dimensions of 6″ to 7″ are common in small rural cottages, and 9″ to 10″ in city houses. Flat roofs are, in this respect, practically the same as floors; they average approximately 8″, or twice the thickness of the wall. Inclined roofs are nearer 6″, or one and a half times the wall thickness. Although foundation walls are of totally different material and construction than the wood-frame house they support, their thickness will be found to fall between two and three times that of the wood-stud wall. If of average concrete mix and strength, 8″ foundation walls should normally fulfill all requirements, although, as set forth in Volume II, city ordinances generally specify 10″ or 12″.

If structure were redesigned to make these approximate ratios exact, so that all dimensions in the construction would be integral multiples of the wall thickness, no appreciable change in the completed house would result. Each component part would still be properly proportioned to fulfill its function. By this redesign, the structural-wall thickness would become the linear module for the house, its greatest common divisor, the basis on which might be standardized not only the method of layout, but the design and manufacture of all its elements. In frame construction in which load-bearing is a major function of the frame, the " structural-wall thickness " is the thickness of the framing. In other types, the " structural-wall thickness " is the thickness of the construction solely depended upon for strength, whether or not it includes or serves supplementary functions.

From a practical viewpoint, therefore, the nominal structural-wall thickness of the American wood-frame house has the required integral relation with the measurements of all structural elements. Since its dimension, 4″, or an integral multiple thereof, can define the measurements of structural wall, floor, roof thickness, and the main framing members, it may be con-

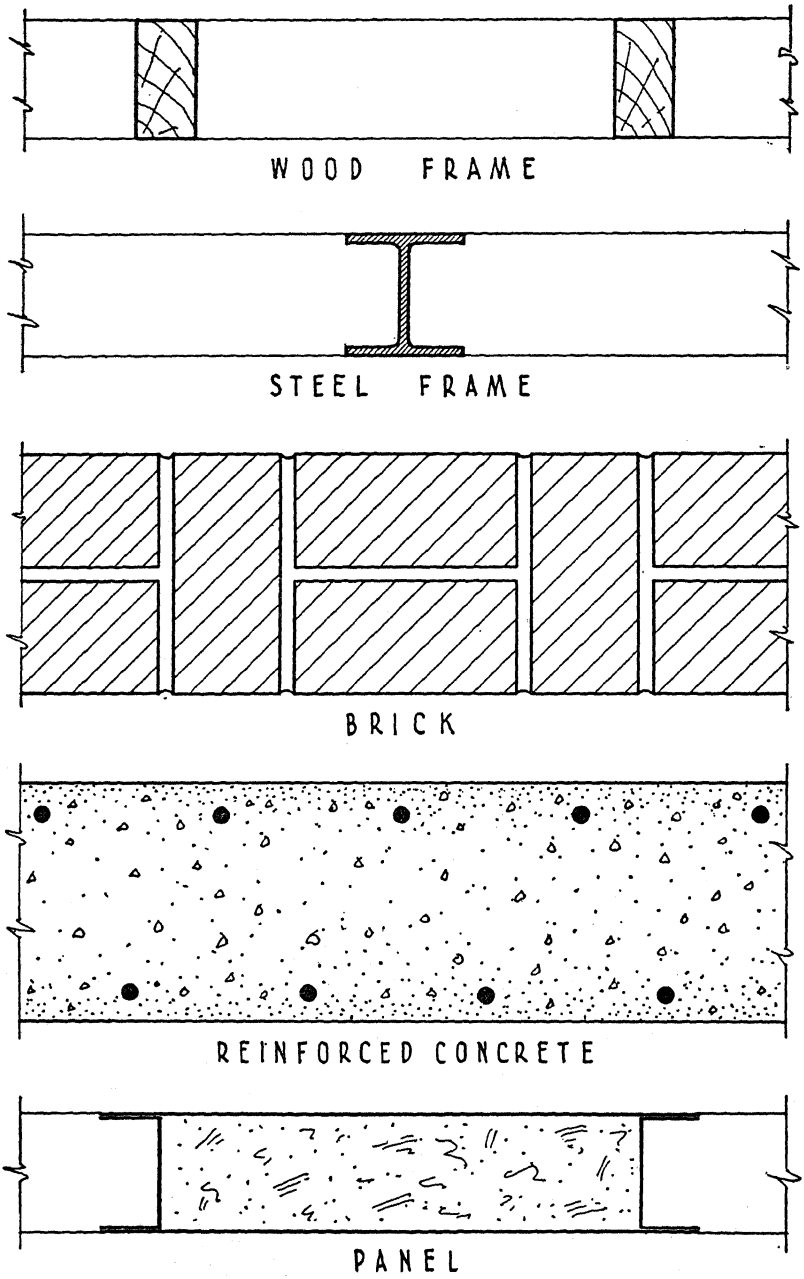

FIG. 11. "STRUCTURAL-WALL THICKNESS" FOR VARIOUS STRUCTURAL TYPES

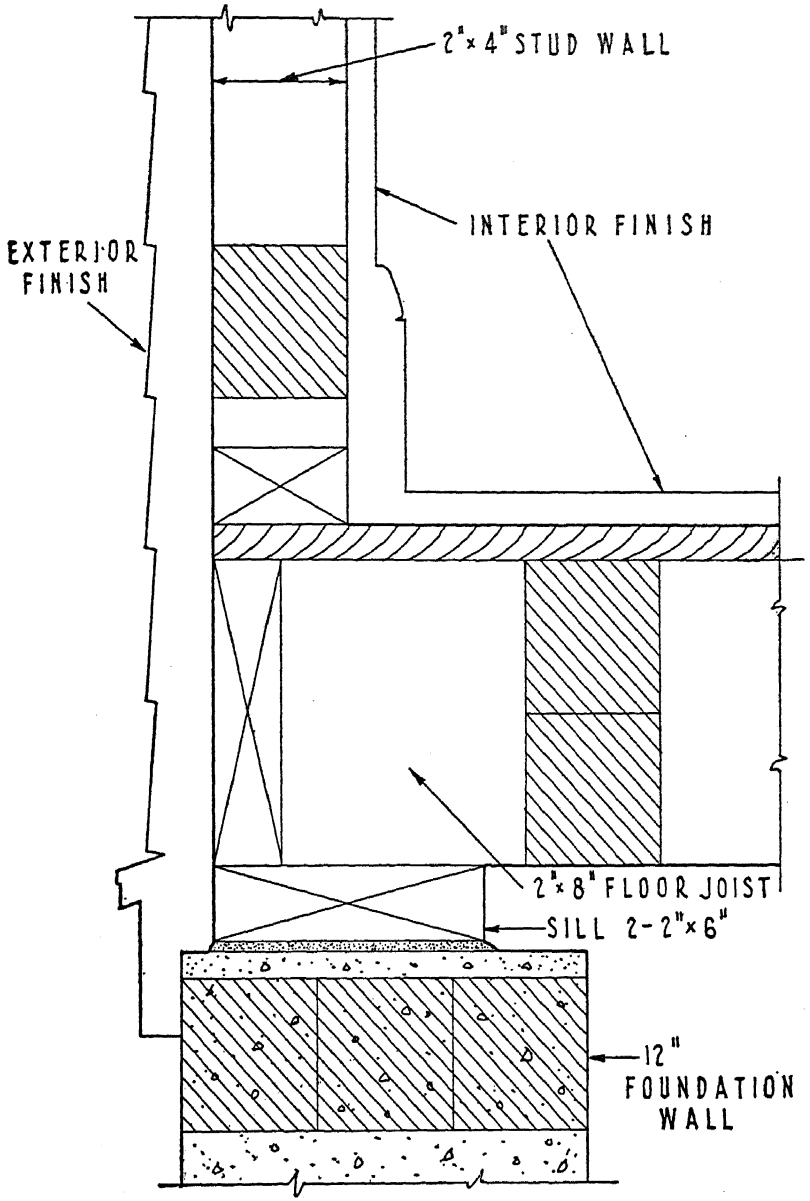

FIG. 12. CROSS-SECTION OF TYPICAL WOOD FRAME (Platform Type)
The thickness of the structural wall may be considered the reasonable module for the wood-frame house

sidered the reasonable module for the wood-frame house. It is true that floors are sometimes 6″ or 10″ in thickness, or 1½ to 2½ times the structural-wall thickness, involving a fractional multiple of the module. If it seems impractical or uneconomical to change these floor dimensions to 8″ or 12″, and if fractional multiples, involving one-half a module, seem undesirable, a unit of 2″ may be adopted as the minimum linear dimension; technically there would be no difference in results. But the smaller the cube module, the greater will be the number of units of different dimensions required to meet all conditions. The more practical conception, therefore, is that of the structural-wall thickness as the minimum dimension of house structure and as the actual dimension of the cubical module upon which its structure may be designed. That is the dimension we shall adopt as the linear module. It will be designated as M, inasmuch as we are not concerned with the actual number of inches it may represent, but with the relationship it establishes.

In the direction of any one of the rectangular planes as imposed by rectangular structure, M may be taken as a standard unit of dimension for defining the thickness of walls, floors, and roofs; and it will obviously be M in the other two directions. Thus in the plane of any floor or wall there is a unit of area, M^2, which can conveniently become a cross-sectional or plane unit for standardizing the method of layout for the house in its three planes. It may then be considered that the house and its entire cubic contents is cut in these three directions by planes, spaced M apart and dividing the entire volume into a finite number of cubes, each of which becomes a unit of volume equal to M^3.

The roof structure, though inclined to two of the rectangular planes of the house, is always perpendicular to the third plane of the house. Planes parallel to this third plane divide the roof into strips, multiple M wide. In the other two linear dimensions the modular relation to the rest of the structure is defined by the angle of incline. To simplify the development of our solution, however, we defer until later the application of this rela-

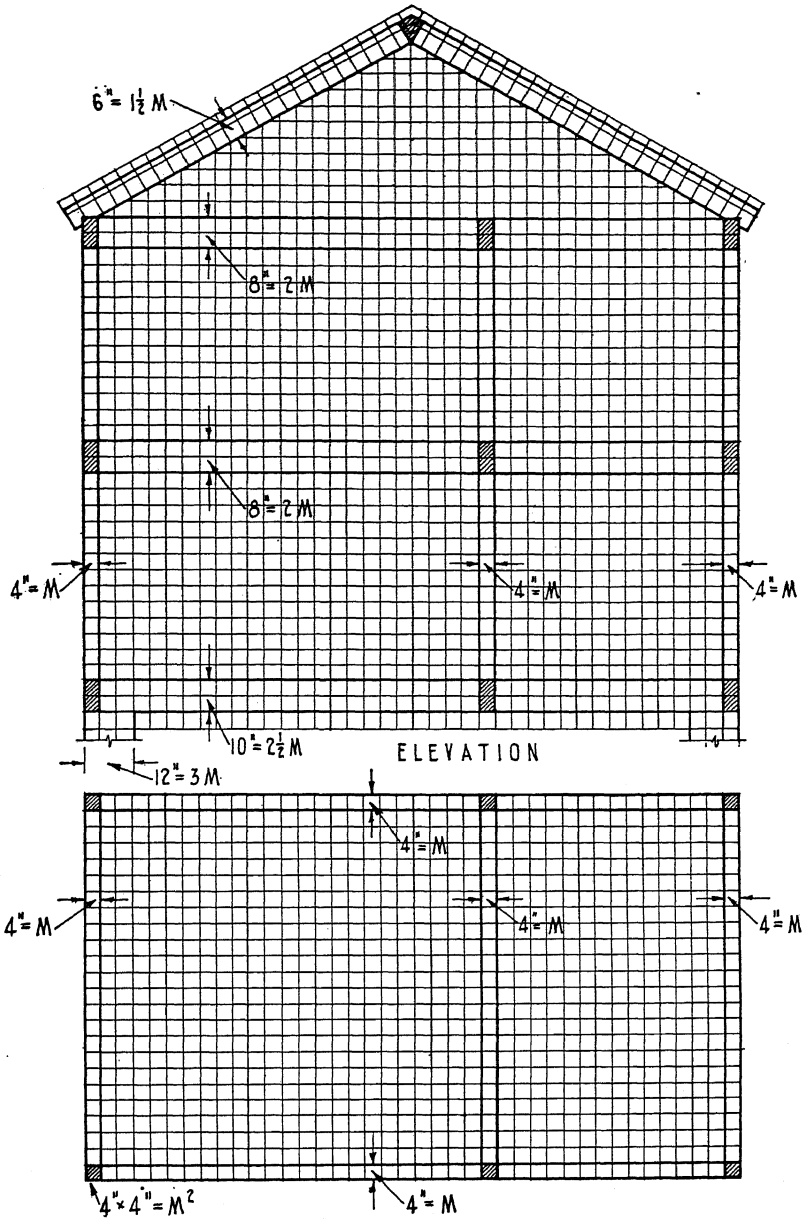

FIG. 18. PLAN AND SECTION OF TYPICAL WOOD-FRAME STRUCTURE
(Platform Type)

tion to the structure of inclined roofs and similar elements, and confine our attention to the overwhelming percentage of the total volume of the house that is strictly rectangular.

The structure of the rectangular portion of the house, therefore, may be laid out in linear M's in all three directions. Since the structure is thus definable in all three rectangular dimensions, so also are its exterior plane surfaces as well as the cubical spaces enclosed therein, and its door, window, and stairway openings. Thus, the unlimited variations of dimension in existing traditional structure in all its planes become in this new conception a tangible, relatively small, definitely limited variation of the practical order of 4″ for the wood-frame house.

In other words, the cubical module indicated by the analysis of mass-production principles is found again, and quite independently. Analysis of the house, the possibility of standardization for its parts, and their actual relation and dimensions again corroborate this module. Although its use and actual specifications for its dimensions seem unmistakably indicated by these important requirements for the rationalization of the house, the restrictions that may be imposed through its use should be considered.

From the point of view of the prospective occupant, a latitude of 4″ in defining the size of a room or an opening will allow for individual tastes and needs. In the design of a room under present methods, the desired dimensions might be an unrelated combination of measurements, say 16′-1″ x 12′-3″. But let us assume that mass-produced parts are to be used in building that house and that these parts come in multiples of 4″. Although the designer must consequently correct his room to 16′-0″ x 12′-4″, the most ardent purist could hardly maintain that this correction destroyed any subtlety of proportion. As to the size of openings, if a door 2′-6″ x 6′-6″ had to be changed to 2′-8″ x 6′-8″ in order to conform to a 4″ module, would its appearance or usefulness be impaired? A house need not be stereotyped or distorted in plan and size because its parts are assembled according to a selected variety of definite dimensions rather than

an accidental variety of irrelevant dimensions. As a matter of fact, through reduction of cost in building operations the individual would have within the range of his pocketbook a far wider choice in plan and appearance. It is the purpose of the conception here presented, not to restrict the house in essential form or type, but to simplify its construction and to make possible its economical manufacture and assembly.

If the unlimited variation of dimension in the traditional house were reduced to a definite, a reasonable variation, the number of sizes for its structural elements would be correspondingly reduced. Studs, joists, wallboard, windows, doors, and downspouts of an indefinite number of lengths, cross-sections, and forms could by the adoption of a module be reduced to standardized elements. From these could be provided all the various houses, different in size, equipment, and appearance, for which an unlimited number of parts cut, shaped, and made on the site is now required. But the adoption of such a module would do much more than make possible the higher standardization of traditional house parts; it would provide the basis for a redesign of structure suited to real mass production.

Although the above analysis is based upon the wood-frame house, similar analyses of other common types will lead to the same conclusion. Where steel framing is used, a similar relation between the thicknesses of the wall, floor, and roof is found. In the traditional masonry type, with supporting walls of brick, stone, concrete block, or tile there is also a similar relationship, although in a different distribution. In these types, exterior walls approximate 8″ to 12″ in thickness. Such houses in this country generally have interior partitions of the wood-stud type; but where fireproof construction is required, partitions are usually of 4″ block or tile; and in foreign countries, where cellars are not much used and where the masonry type still prevails, a single thickness of brick is used for inside partitions. For floors, wooden joist construction approximating 8″ thick is the common practice in most houses of the true masonry type, whether in America or in foreign countries.

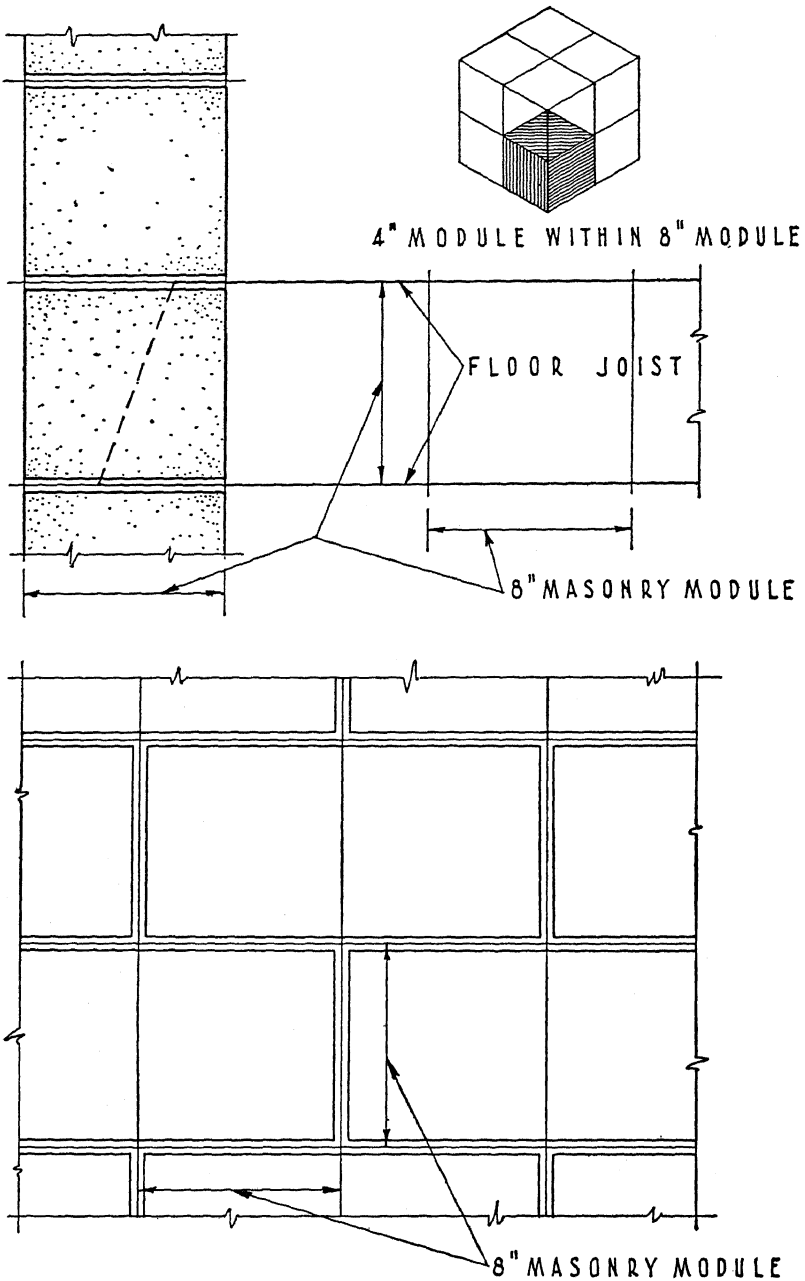

FIG. 14. MASONRY MODULE OF 8", LAID-IN-THE-WALL

Although these dimensions are all of the order of the 4″ modular cube indicated by wood-frame construction and based on the thickness of the structural wall, a module of such a size would be too small for brick dimensions and impractical for most masonry materials. For masonry construction, the nature of the materials employed indicates a module of 8″, the dimension of both the structural wall and the floor. For bricks laid in the wall, an 8″ cubical module seems reasonable, for in vertical dimension brick sizes and jointing are such that a cubical module — and the rational module must be cubical — accommodating them would have to be 8″ — that is, double that of the wood-stud frame. This means that bricks and brickwork would be standardized on the basis of an 8″, laid-in-the-wall cube, and that the ground plan and cross-section of the house would have to be laid out on an 8″ cubical module.[1]

Other masonry materials could readily conform to such a module, and, moreover, an integral relation between the logical module of 4″ for the prevalent wood-frame type and that of 8″ for the traditional masonry type would be established. Although the linear dimension of such a module would be approximately twice that of the frame house, and its volume eight times the cubical module of the frame house, materials for these different types of construction could all be standardized on the basis of a cubical module defined by the thickness of structural wall or floor.

In traditional masonry types the masonry walls dimension the rest of the structure; but since the thickness of the mortar joint between stones, blocks, bricks, or tiles is a variable quantity, the superficial wall dimensions between individual members and courses are likewise variable. Such dimensions, as well as those of the wall itself, are dependent upon the eye and the hand — a method which, as previously stated, is at variance with mass production.

Mass production for the house means not only mass produc-

[1] Cf. "Modular Masonry and the Small House," by Willard H. Bennett, in Architecture, October, 1934, p. 215.

tion of materials but their combination into "pre-fabricated" parts, so that field assembly will be automatic because the accurate dimensions of completed structure have been determined in the shop. The framing of the house thus provides the focus for standardization, and serves to position all other parts, whether "pre-fabricated" or made on the site. Traditional constructions, therefore, can be standardized by the same module as prefabricated parts.

The old brick and stone type of house is no longer important in this country. Where brick or stone, concrete blocks or tiles are used for exterior walls, these usually form only a veneer tied on or into an interior frame structure. Therefore, to adopt the interior frame structure of the house as the focus for standardization, by no means excludes masonry from the field of standardization and rational future use.

The principles involved may be clarified by considering the brick-veneer construction. Horizontally the thickness of the brick veneer approximates 4″; and, therefore, with the wood frame to which it is tied, the total thickness of the exterior wall is approximately double that of the wood-stud wall. But vertically the brick sizes and jointing are such that the module would have to be double that of the wood-stud frame, namely, 8″. The interior frame for a house so designed would obviously be appropriate to materials and parts standardized on a 4″ cube. The standardized design and manufacture of building materials, therefore, on a cubical modular relationship appropriate to the above could hardly encounter any real obstacle.

There are other types of construction to which the foregoing conclusions would apply. In reinforced concrete structures, standardization would be directed to the forms. To effect the highest degree of standardization, such forms should be designed on the cubical modular basis of the foregoing analysis. Certain types of structure, such as the adobe houses of the Southwest and the log cabins of the timber regions, are essentially individual in character. The labor used, the nature and cost of the materials are not well adapted to standardization, al-

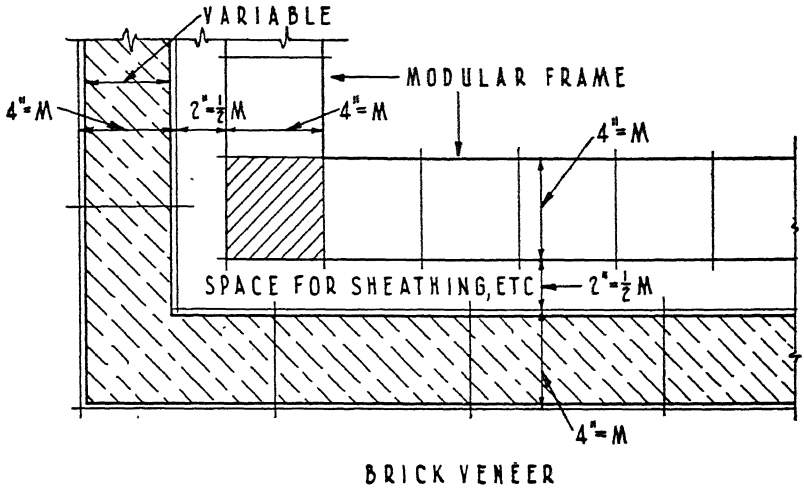

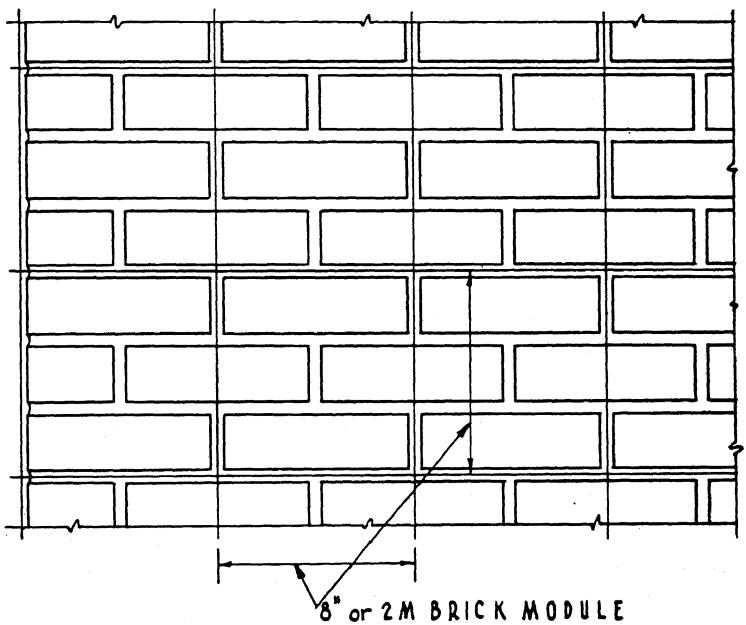

FIG. 15. THE MODULE AND BRICK-VENEER CONSTRUCTION

Bricks and brickwork would be standardized on the basis of an 8", laid-in-the-wall module

though individual parts, such as the adobe brick and forms for puddling walls and roofs, could be designed on the modular basis defined. But, since the standardization of such construction lacks economic incentive, it may be ignored in this discussion.

Cubical modular design in itself simply requires that all parts of the house, including particularly the means of interconnection, be proportioned to the same module in all three dimensions. The size of that module is determined by practical considerations of materials, structure, type, and planning. A larger module would restrict flexibility in design; a smaller module would require a greater number of units of different dimensions to meet all conditions. There is nothing magical about a dimension of 4″ for the module. It might measure 3″, or 3¾″, or 4½″, or perhaps 10 centimeters in countries using the metric system. For this exposition, a dimension of 4″ is selected, because it is the nominal greatest common divisor of the wood-frame house, which represents the bulk of American housing and is the predominant type to which other forms of construction are related. Standardization of any kind is necessarily based upon a fixed unit of measure. To satisfy major requirements of building construction, house parts must be standardized in all three directions, and for this purpose a cube of minimum structural-wall thickness is the logical unit of measure. But whether by this particular unit or by any other, the standardization of rectangular construction presupposes a fixed measure of length, in each of its three axial planes. Partial standardization may be effected through different vertical and horizontal modules. But complete standardization requires a cube module — the same unit of measure in all three planes.

The actual process of standardization, by which the abstract unit of measure is transferred to the tangible part, implies identical dimensioning of other parts so that all may ultimately be fitted together. Whatever the materials or the type of structure, its component parts, if standardized, must be definitely related to a base of a substantially fixed dimension in all three

directions. In this country that base would normally be a frame. But whatever base be provided, its dimensions must maintain substantially constant relations to each other. Its material, therefore, should be homogeneous and without undue expansion or contraction under changes of heat and moisture.

Standardization depends not only upon a fixed unit of measure but a fixed unit of substance — fixed in dimension. Until a synthetic material is provided appropriate to the other functional requirements, including cost, full measure of standardization of parts cannot be effected. At present, both traditional and mass-produced construction must meet the problem of building a composite house out of a miscellany of materials differing often widely in their dimensional quality. A frame or other structural base of reasonably constant dimension is the tangible focus for standardizing all other parts, but it must be designed on an accepted unit of measure.

Once more, the highest degree of standardization for housing structure and all its parts demands a single unit of measurement in all three directions. This defines the cube of structural-wall thickness as the suitable module of design.

CHAPTER V

The Cube as a Module

ALTHOUGH a cubical module of a definable size is indicated as the rational unit upon which to standardize house parts adapted to mass production, the method of design based on such a module must be demonstrated. Houses will not be built of modules, but the module must be a practical unit for the specific design of structural parts. This chapter presents an abstract discussion of the properties of the cube that adapt it to such design. Chapter VI, still somewhat abstract, develops general methods of design within groups of cubes to satisfy the complex functional requirements of structure. Chapter VII demonstrates the cubical modular design of various types of actual structure.

In using the cube as the module for design, and thus arriving at standard specifications for house parts, an analysis of house design should proceed, not to build up modular structure from preconceived sets of members, but to determine the design of such members from the house itself and the functions of its parts. Such parts will fit together to form the house demanded today, but will be so redesigned that they meet the needs of rationalization.

The theoretical considerations that led to the adoption of the cube as a module included the need for both standardized manufacture of parts and standardized assembly. If the house can be designed on the basis of a cubical module, with its identical linear dimension in all three cross-sections, an identical variation of all members in all three dimensions will be possible and,

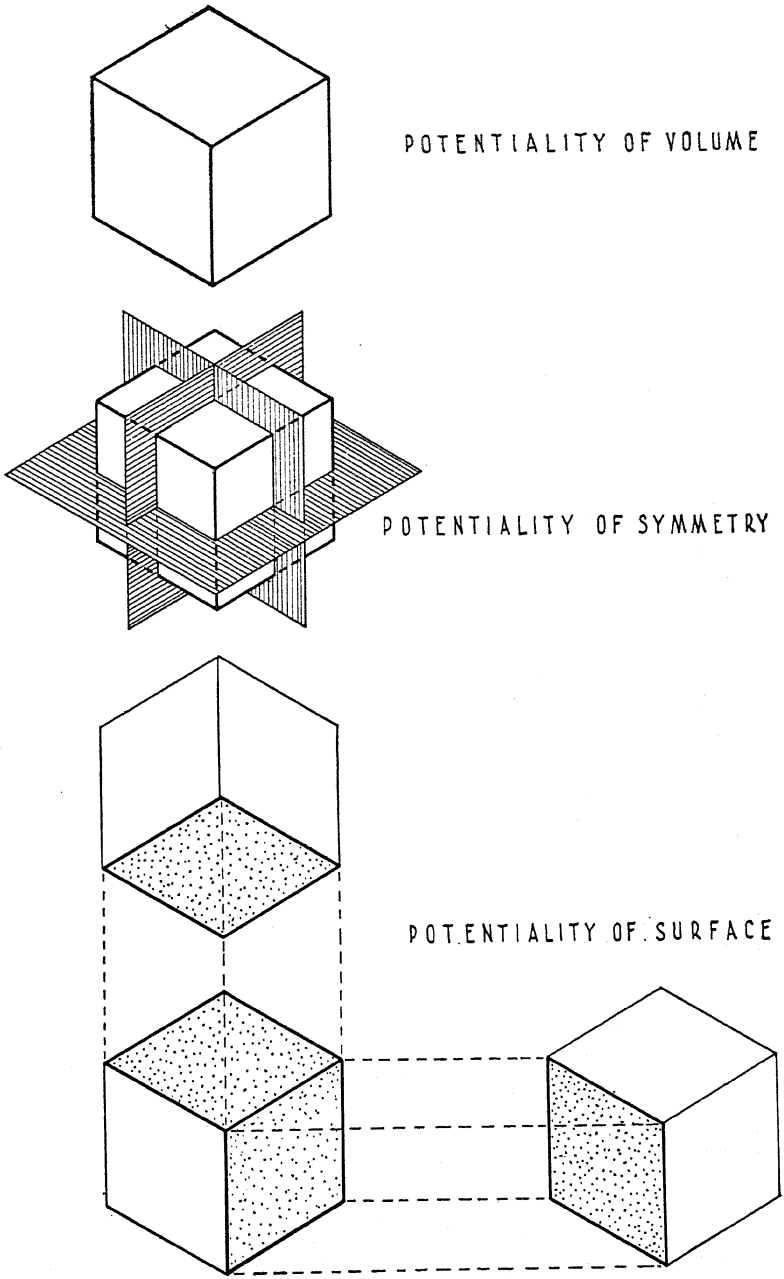

FIG. 16. ASPECTS OF CUBE POTENTIALITY

consequently, the absolute interchange of similar parts and their standardized assembly in all three planes.

This chapter demonstrates that the cube has an abstract potentiality, which if properly applied should meet all the requirements of practical design. This potentiality has different aspects that correspond to the various physical properties of the cube. When considered as a unit of space measurement, the cube defines volume. In this respect it can control plan and elevation, the layout of the house. Secondly, the cube is symmetrical with respect to each of its three axial planes, this symmetry being especially significant in the design of jointing. Thirdly, its six surfaces can control the location and dimensions of composite parts within the module or adjoining it. These three aspects of the potentiality of the cube are indicated in Fig. 16.

Potentiality of Volume

The volume of the present-day house can readily be expressed in terms of the cube as a module. Except for the inclined portions, which may be ignored for the present, the traditional house is rectangular, and its greatest common divisor is a cube. The house may therefore be designed within a total matrix of cubes, a rectangular outline of space, large enough to include all the physical parts of the house (Fig. 17). The cubes of this matrix are, as repeatedly stated, of the order of the structural-wall thickness. Within such a total matrix the outline of the house structure can be delineated.

The distinction between the outline of the finished house and that of its structure must be made clear. The preceding chapter demonstrated that the module was derived from the structural wall, and it defined structural-wall thickness variously, depending upon the type of construction. In one type, the structural wall includes all parts essential to the house; that is, all parts are wholly within the structural cubes. In the other type, there are parts of the house, including finish and additional elements, that are applied outside the structural cubes. Initially, a con-

struction of the integral type is here demonstrated; later the application of the modular principle to the differentiated type of construction is explained. Constructions which combine these types are, of course, possible. The outline that is here defined, through the potentiality of the cube as volume, is that of the house structure alone. It may or may not be that of the finished house, according to the type of construction.

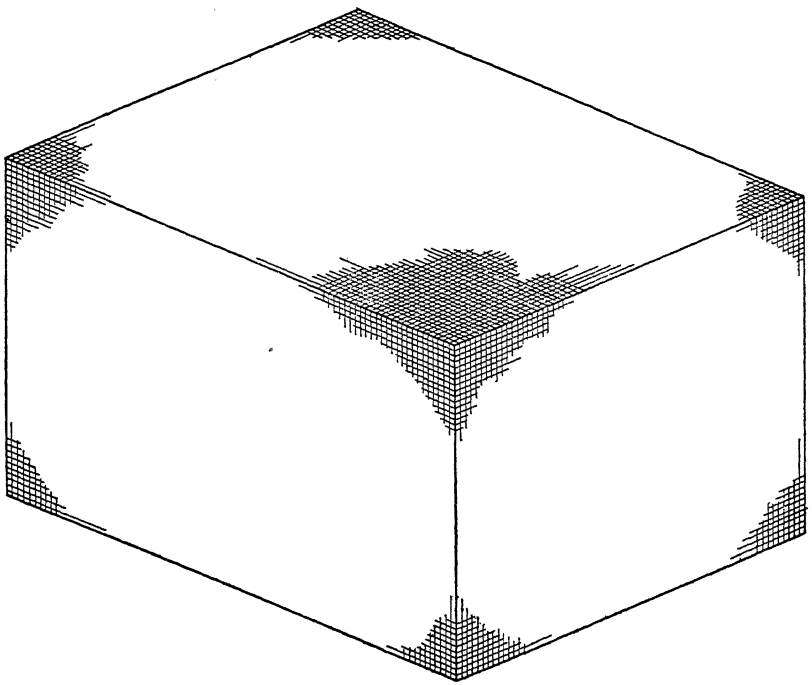

FIG. 17. THE TOTAL MATRIX OF THE HOUSE

The delineation of the structure within the total matrix may be visualized by first removing from within the matrix all the space cubes not comprised in the house volume. The entire exterior surface thus defined coincides with cube surfaces but not necessarily with the surfaces of the grand matrix (Fig. 18). The voids that constitute rooms, doors, and windows can then be defined by the elimination within the house volume of the

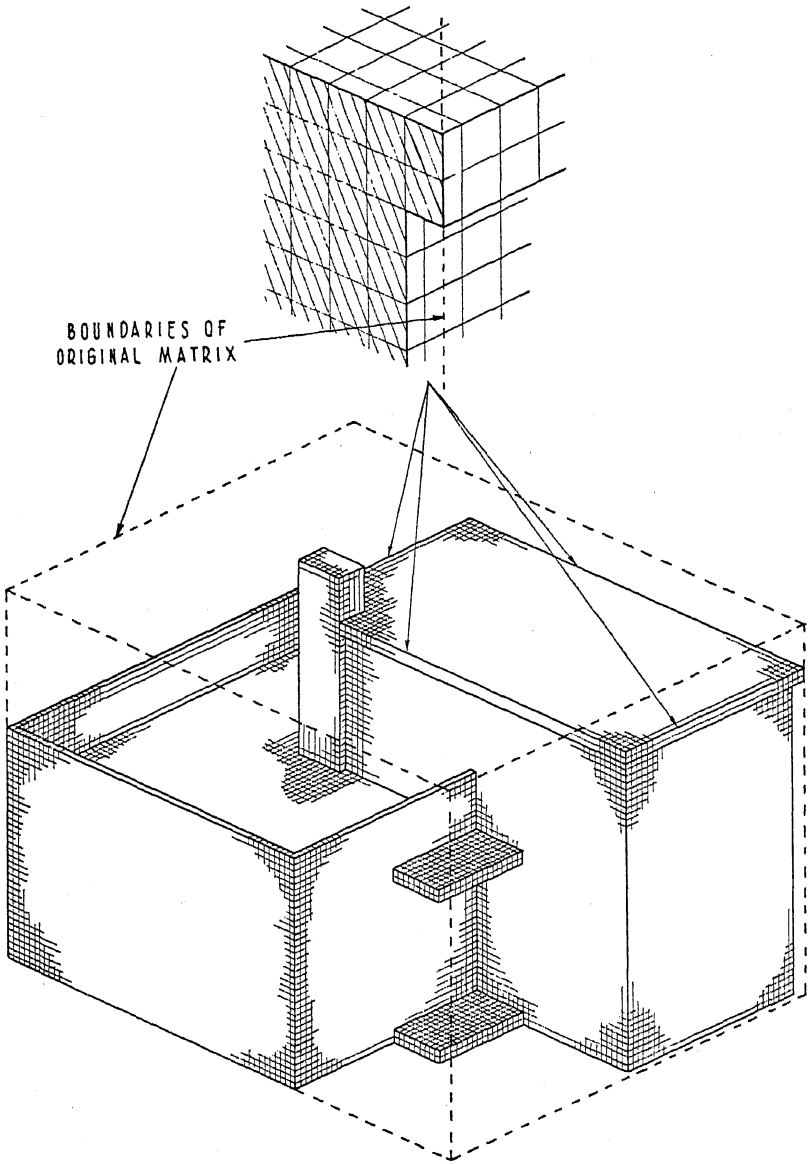

FIG. 18. THE STRUCTURAL MASS DEFINED WITHIN THE MATRIX

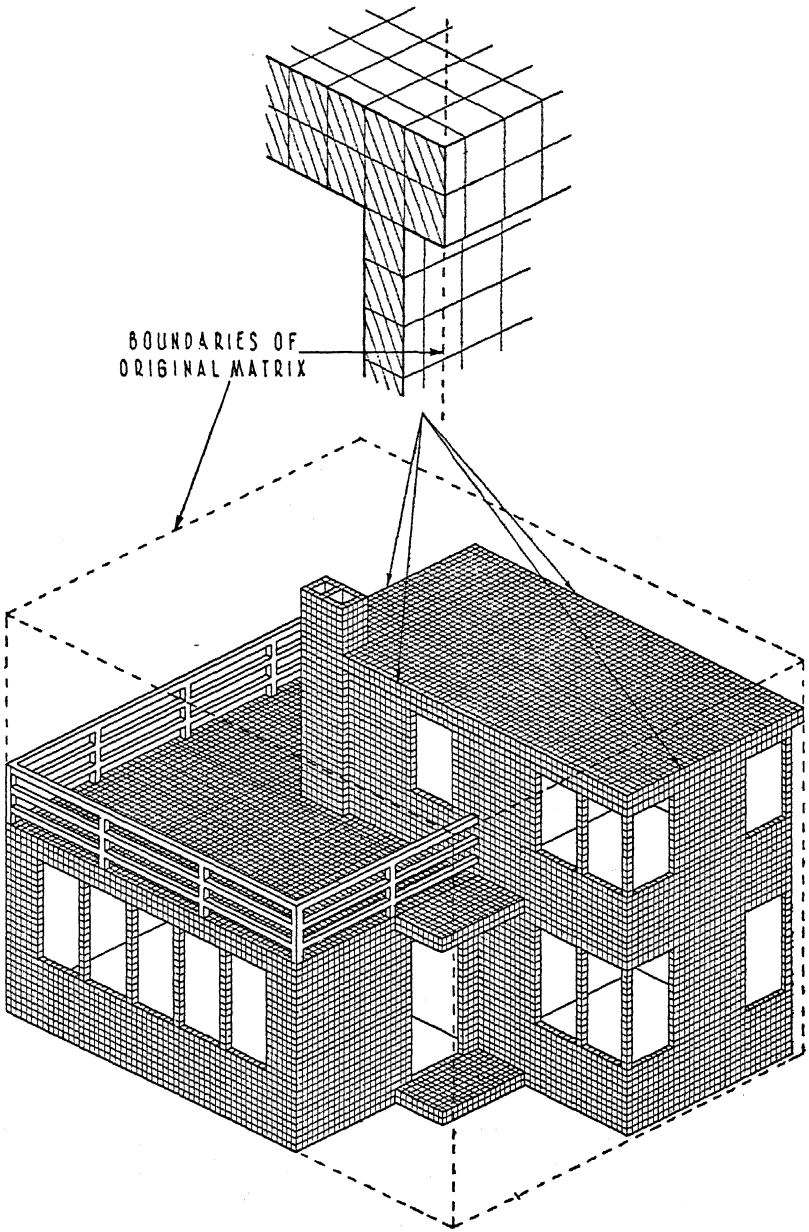

FIG. 19. THE HOUSE STRUCTURE DEFINED WITHIN THE MATRIX

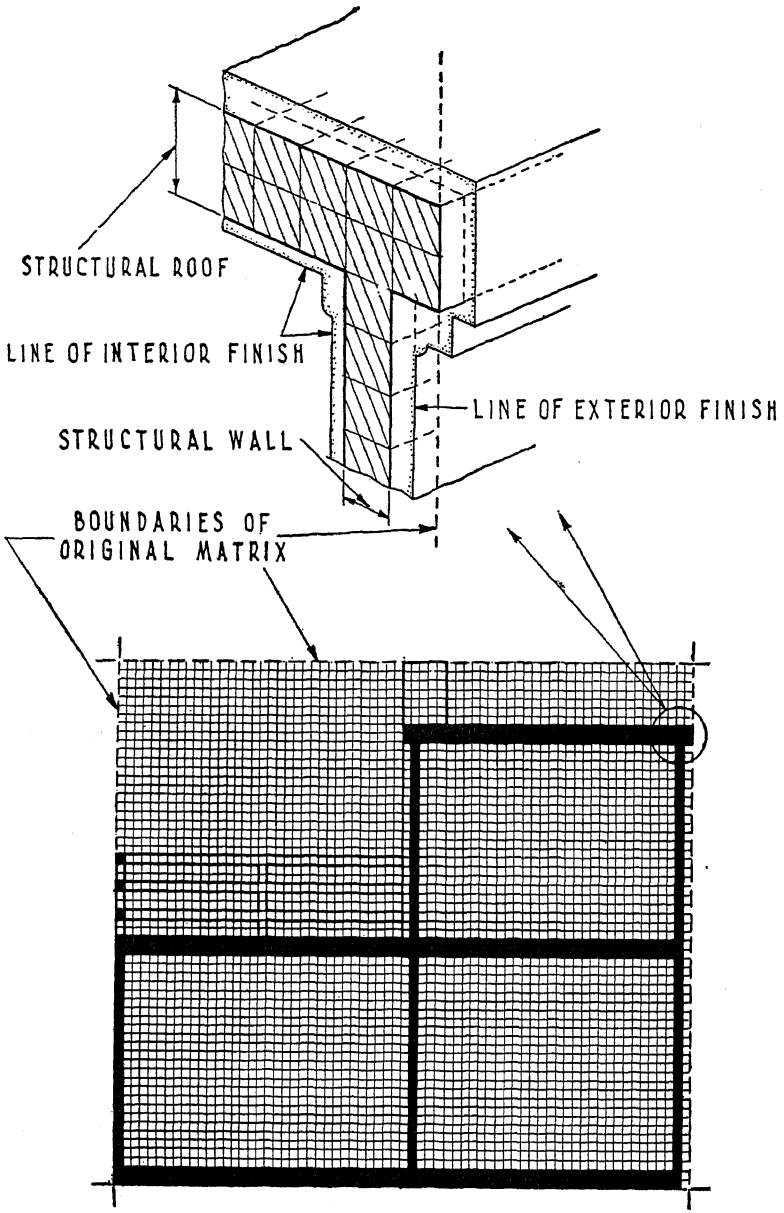

FIG. 20. FLEXIBILITY OF MODULAR LAYOUT

This section of the complete house indicates that a different layout could have been obtained by retaining other ranges of cubes. Upper figure indicates that supplementary features may be applied outside the structural matrix

cubes filling these spaces. The complete and exact form of the structure is now defined (Fig. 19). It is divided into units of volume, cubes of the same size, and all measurements may be expressed as multiples of this module.

The opportunity to introduce openings at any modular division is apparent, and the designer has complete freedom as to

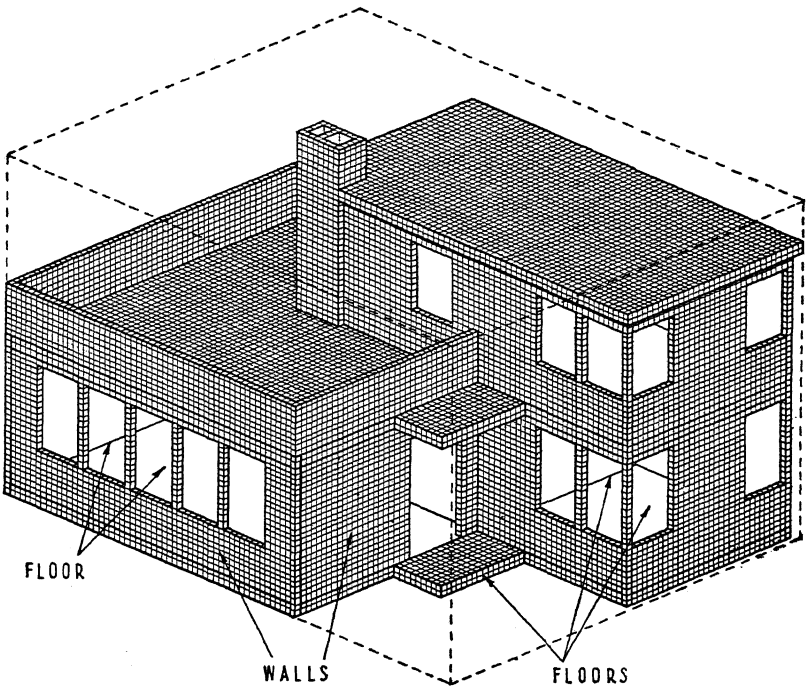

FIG. 21. MAJOR CUBE GROUPS OF THE STRUCTURE

layout. To form a different set of room sizes, he has only to retain different sets of cubes. Walls and floors may be moved one or more cubes up, down, or sidewise, and the necessary specifications for jointing or for any required function will be found within any cube at any modular division. It will be shown later that means are also provided for placing any supplementary features that may be required outside of and contiguous to the structure (Fig 20).

It is evident that in the structure as now outlined certain sections must perform certain broad functions. The horizontal sections obviously must serve as floors, and the vertical portions as walls. This differentiation applies to the cubes themselves. They have now assumed particular functions in the structure: some of them are parts of a wall, and some of a floor (Fig. 21). Each of these divisions of structure consists of cubes ranged in a certain order and fulfilling similar functions; the cubes form a group having a definite entity, both structurally and functionally.

At corners where perpendicular wall sections meet there are vertical columns of cubes common to the projection of either wall. These cubes constitute separate groups, identified by distinct functions of framing and aligning; they represent posts in the structure. Likewise at the intersection of floors and walls there are horizontal lines of cubes common to each; these cubes may be considered as separate groups representing girts (Fig. 22). Thus a type of cube group is formed that represents the main framing and aligning members. The cubes at the intersection of such framing members may be considered as belonging to either posts or girts. These groups will be discussed in the next chapter.

It is the potentiality of the cube as to volume that thus controls the layout of the house within the total matrix of cubes and defines the main parts of the structure (Fig. 23).

Potentiality of Symmetry

In the abstract the symmetry of the cube is such that its three axes are alike and no one of them can be identified except by reference to the position of the cube in the structure. Once the axial planes are thus identified, the position of any point, line, or plane within the cube may be definitely expressed with reference to these planes. This relation to the module may be repeated in any other cube occupying a similar position and assigned to the same general function in the structure. This repetition of the same modular relations is here called *modularity*.

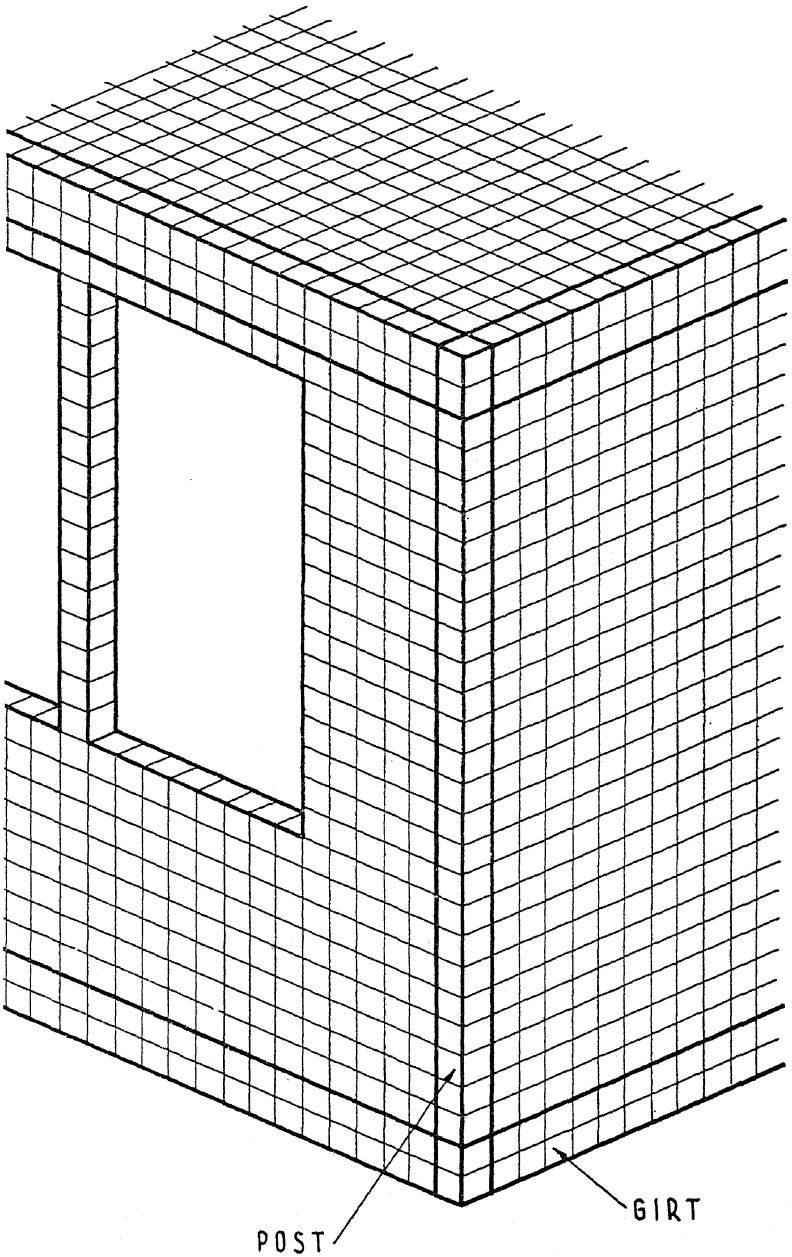

FIG. 22. MAJOR CUBE GROUPS OF THE FRAME

Standardization of the design of house parts is the fundamental purpose of the cubical modular method, an objective that must be kept constantly in mind. Absolute standardization of house parts would require standard units, satisfactory for

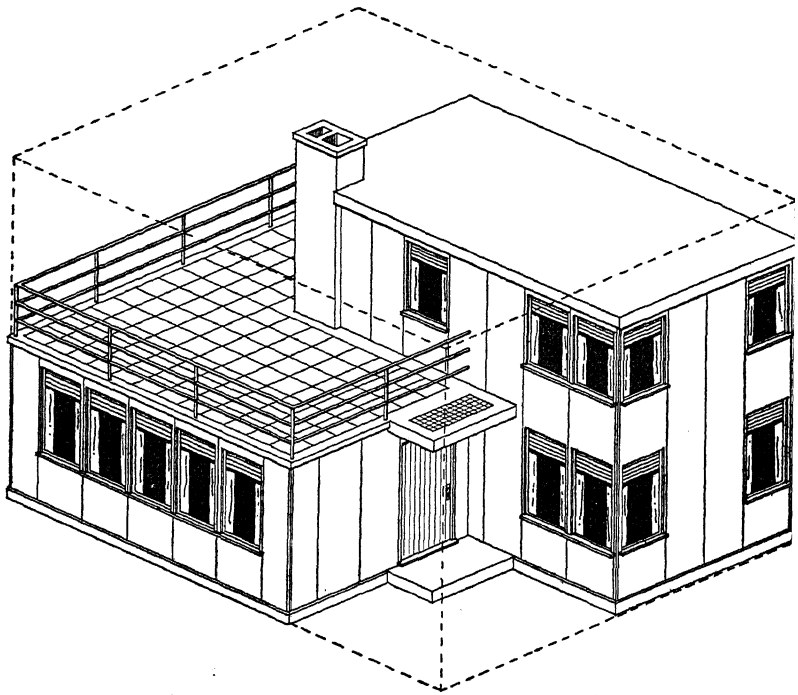

FIG. 23. THE FINISHED HOUSE WITHIN THE MATRIX

either floors or walls and fitted together with exactly similar joints for all connections in all directions. Obviously such construction would be impractical for existing building materials, but it will serve as the ideal conception to which the abstract principles of modular design will be referred. A structure so designed would have a single and uniform modularity throughout, in each and every member.

The elements that perform interconnection and the portions of the structural members that interfit with such elements are the means by which a particular modularity can be transferred

from one part of the structure to another. The marginal portions of each structural member in a wall must be symmetrical about its central planes perpendicular to that wall in order that the joints, and hence the means of interconnection, on either side of the member may be the same. In turn this requires that each joint, including the interconnecting means employed, must be symmetrical about its central plane. Thus, once the marginal portion of any one wall member is designed with reference to its matrix, that particular relationship to the module, its modularity, must be repeated on the opposite side of the member. By the joint with its interconnection means this same modularity is transferred to the next adjacent member and so on through the structure. This transference of modularity may occur in all three dimensions (Fig. 24).

Since jointing must transfer modularity throughout the structure, the design of interconnecting means is of fundamental importance in the cubical modular method. Each joint is designed within a matrix of supplementary cubes. As a consequence of the essential joint symmetry, this jointing cube group must be centered on the central plane of the joint. It obviously must extend the full length of the joint, and its thickness will be that of the structure at the joint. In width, transverse to the joint, the basic cube group of any joint cannot exceed one module (Fig. 25).

The necessity for limiting the jointing cube groups to one module in width is apparent, if complete flexibility in the width of the structural parts interconnected is to be provided. For a structural member the minimum width would be one module, and in such a member the means of interconnection could not intrude beyond its center line without overlapping the opposite means of interconnection. This limits the jointing cube group to half a module on either side of the joint axis.

There is, however, another aspect to the width limitation of jointing which leads to important conclusions about the normal location of the repetitive features employed for interconnection.

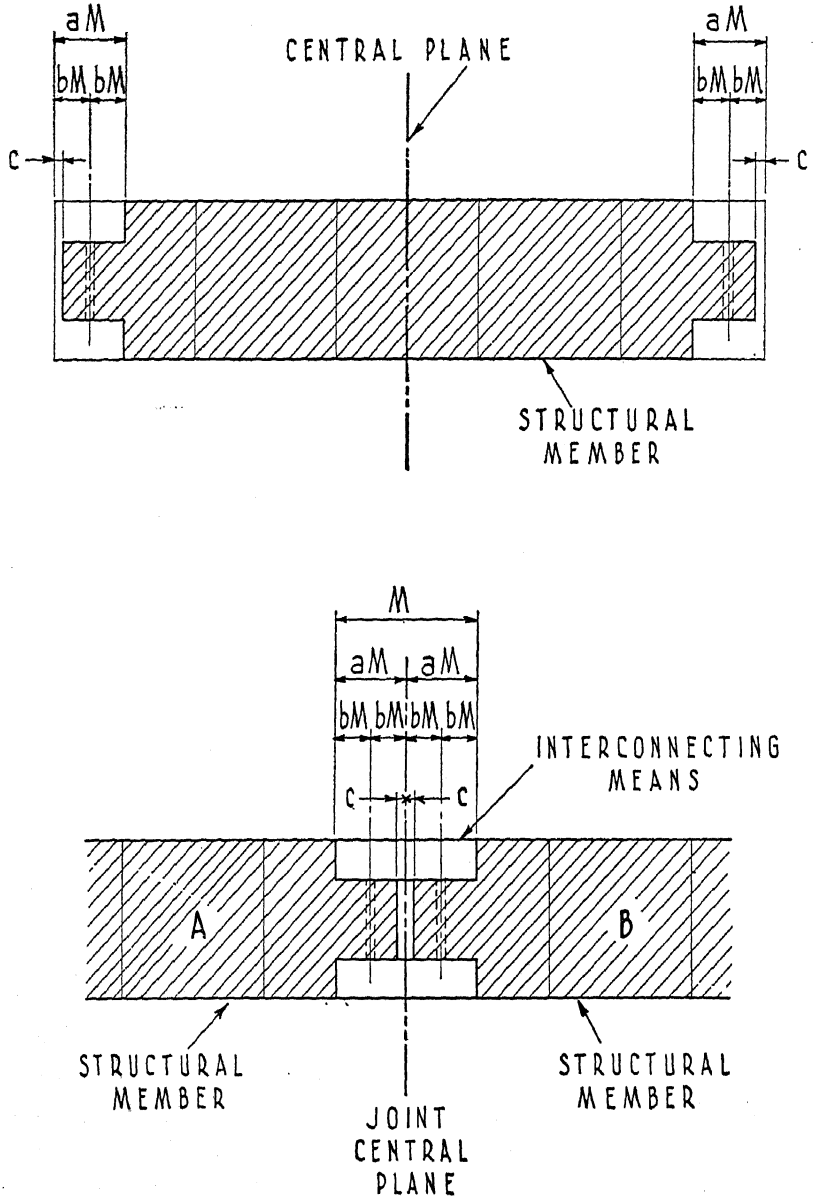

FIG. 24. TRANSFER OF MODULARITY BY JOINTING

The interconnecting means (lower figure) serves to transmit modularity (i.e., repetitive features aM, bM, c, etc., of upper figure) from member A to member B

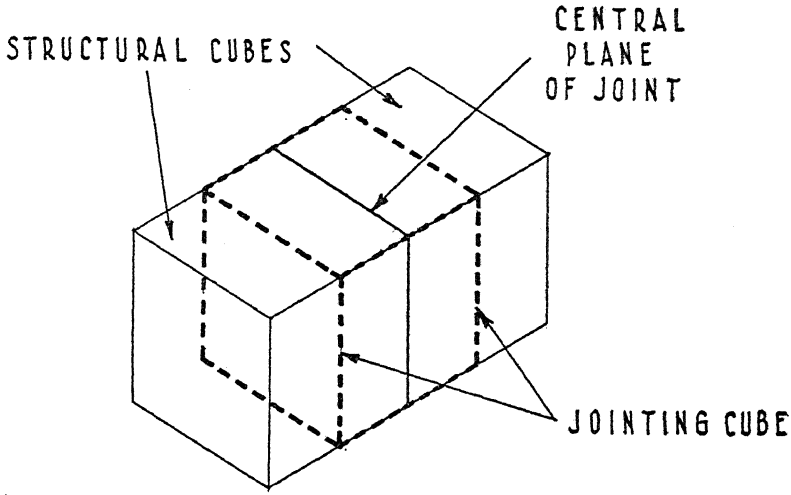

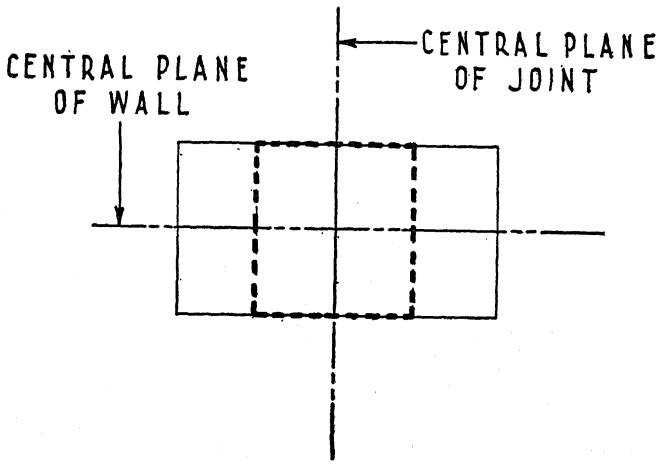

FIG. 25. THE CUBE AS A MATRIX FOR JOINTING

The two structural cubes are located on adjoining structural members. The matrix for design of the joint is a cube centered on the plane of the joint and extending a half module into either structural cube

Two adjacent structural members which are to be joined in the structure cannot be assumed to be limited to members of the same length. It frequently happens that two or more members must be jointed to one edge of a long member, so that within one side of the long joint matrix, the marginal portions of two or more distinct structural cube groups are found. For example, in Fig. 26 the portion of the jointing matrix J includes within it the margins of the two structural cube groups A and B, and group A represents a long member extending beyond B, jointed successively to members B and C. For strictly modular design, a point located within one jointing cube must be repeated in each similarly located cube in that group. In other words, repetitive features are thus limited to a maximum gauge of one module along the joint. The points P are each common to the matrices of two joints and P′ are the points opposite them on the through joint. Bearing in mind the essential joint symmetry and the limit of repetitive gauge to one module, it is apparent that the square PPP′P′ cannot exceed one module for its side dimension. The points are shown on the surface of a wall, but they could have been placed on any plane within the structure, parallel to that surface.

Jointing conditions in a single plane have just been considered, but similar conclusions would be reached if the three structural members were in different planes. The points P would be found to lie at the centers of structural cubes. Thus being subdivisible by its three axial planes, the cube further acts to locate points, lines, and planes that are the foci defining interconnection and interfitting. Fig. 27 illustrates this division of a primary cube into eight secondary cubes and Fig. 28 the repetition on the secondary cubes of central points, which are, of course, the points of intersection of their axial planes. This division can be repeated, if such procedure is desirable, but since each subdivision must multiply the number of repetitive features by two, a practical limit is very quickly reached. These axial planes of the module define the focal point of interconnec-

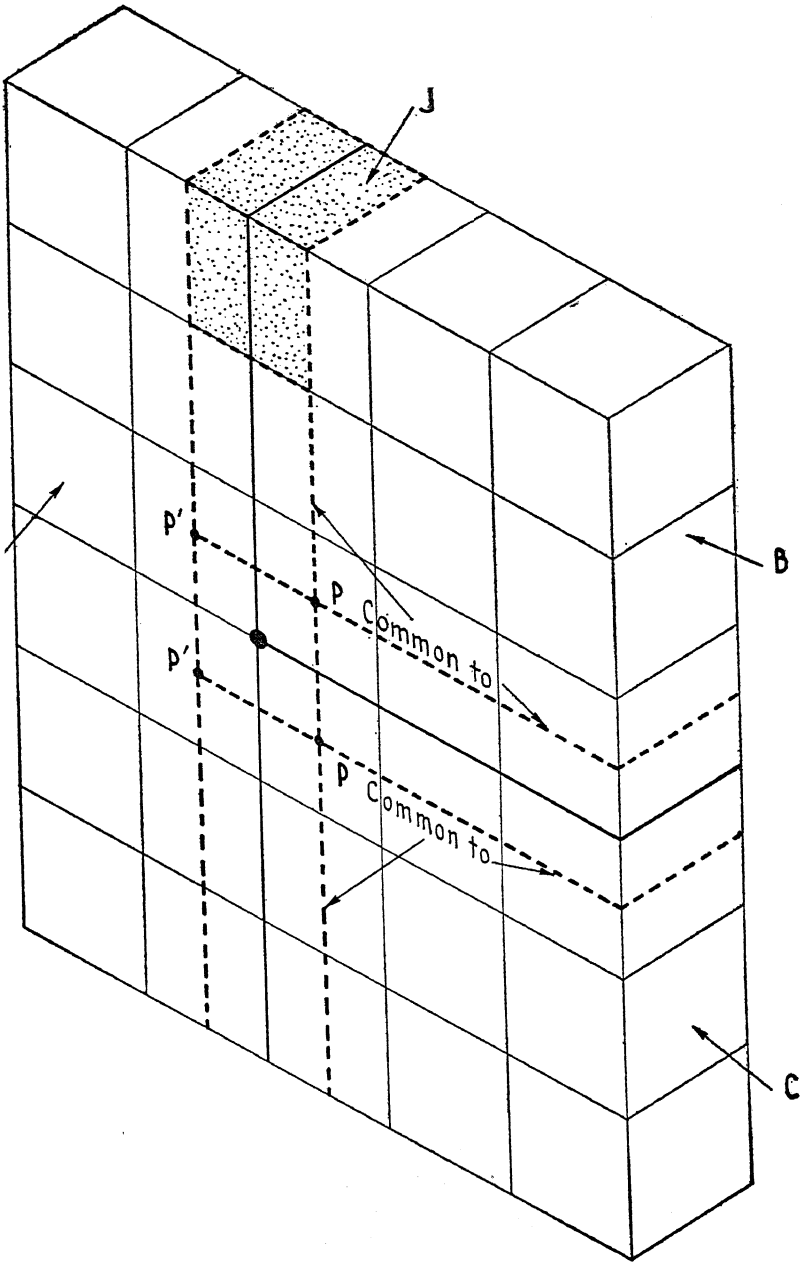

FIG. 26. LIMITATION IN WIDTH OF JOINTING MATRIX

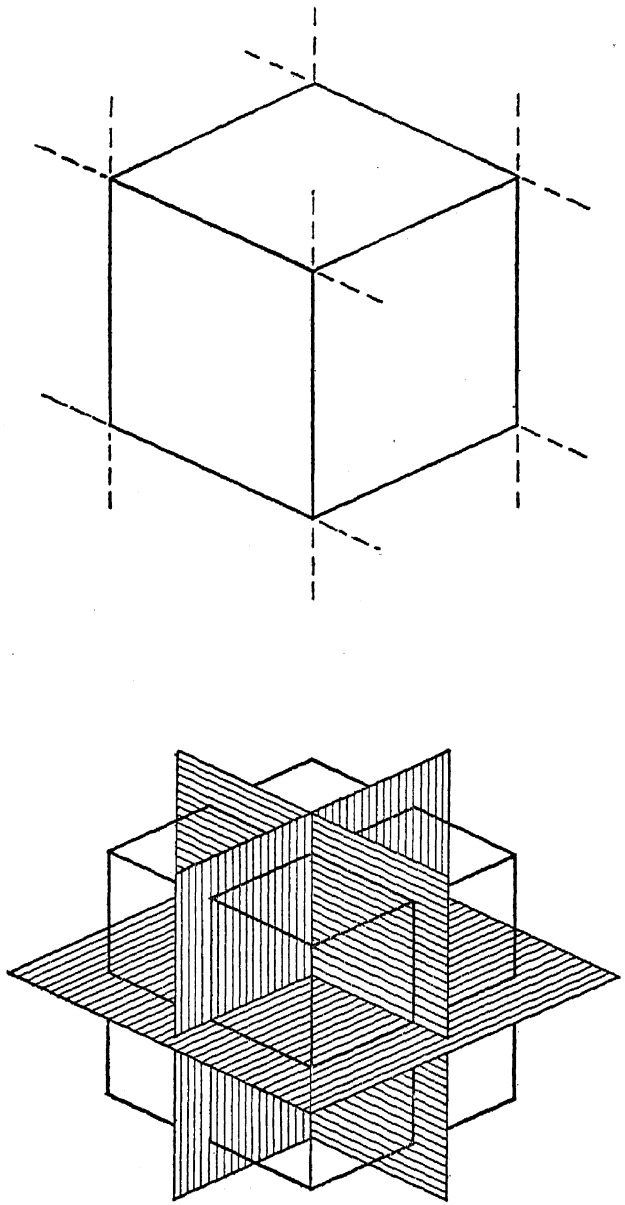

FIG. 27. DIVISION OF THE MODULAR CUBE BY ITS AXIAL PLANES

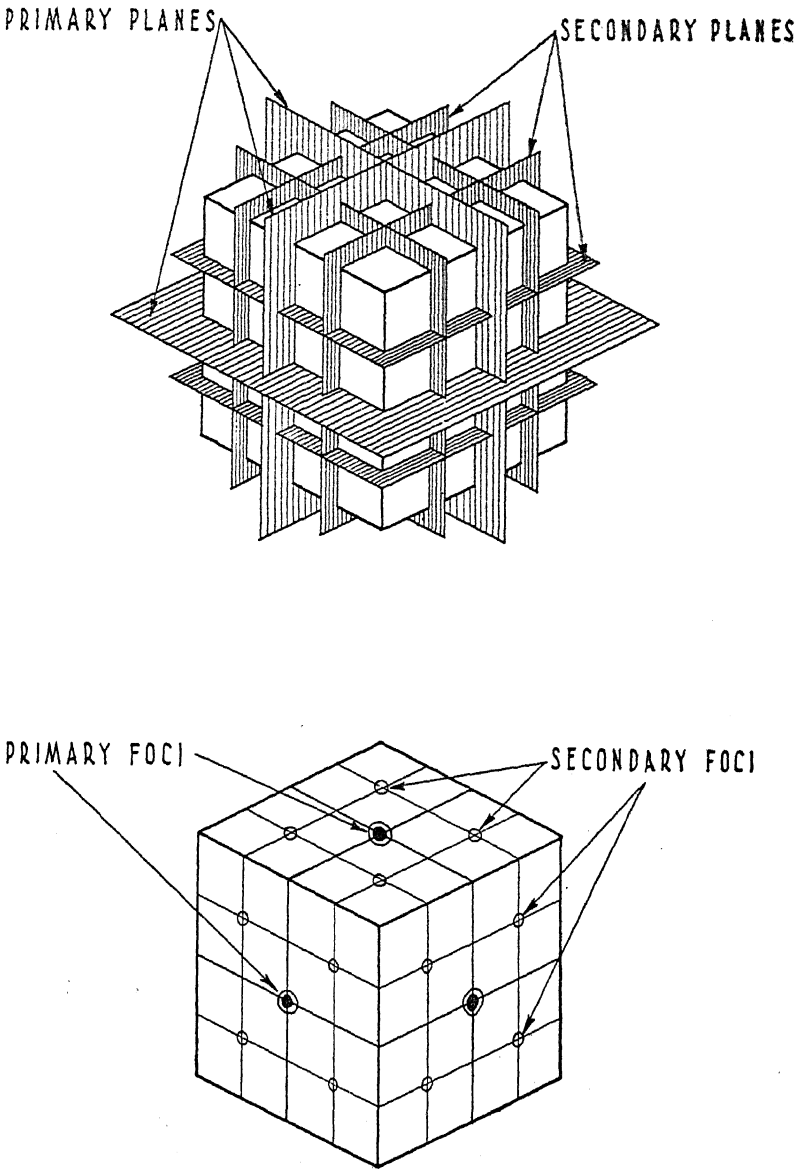

FIG. 28. AXIAL PLANES OF SECONDARY CUBES

Primary foci are determined by the intersection of primary planes; secondary foci are determined by the intersection of secondary planes

tion at its center, and so the focal points of interconnection between the main parts of the structure. The eight smaller cubes represent eight functional possibilities with lines and points for the design of interconnection and interfitting in three directions.

At this point it would be reasonable to ask why the module was not divided by two at the outset, and the wall thickness thus taken as two modules. To meet this question, it is pointed out and emphasized that although the division of the cube can be used wherever required, it relates particularly to jointing and is required chiefly at the marginal portions of members. The structural cube of full modular size controls the sizes of structural parts and the number of standards required; the division controls the details of jointing design and the attachment of parts placed outside the structure proper. It has been emphasized that the adoption of a smaller cube as a module for structure would increase the variety of sizes required and would, to the same extent, reduce the degree of standardization that could be realized.

The axial planes determine the condition of complete symmetry, or lack of it, within the cube. A feature defined inside the cube for the function of interconnection (Fig. 29) may be asymmetrical about one of the axial planes and symmetrical about the other two. Jointing may be completely symmetrical in the jointing cubes, but in the marginal structural cubes the symmetry will exist about two axes only. Thus the potentiality exerted by the cube through its axial planes includes the differentiation of function, or rather the inclusion of dissimilar function, within one cube or any cube. Dissimilar functions are found in floor members providing flooring and ceiling, or in a wall the exterior surface of which is treated differently from the interior. The cube possesses the highest and most flexible order of theoretical symmetry and also the means of combining within it complex features which perform functions essentially asymmetrical in character.

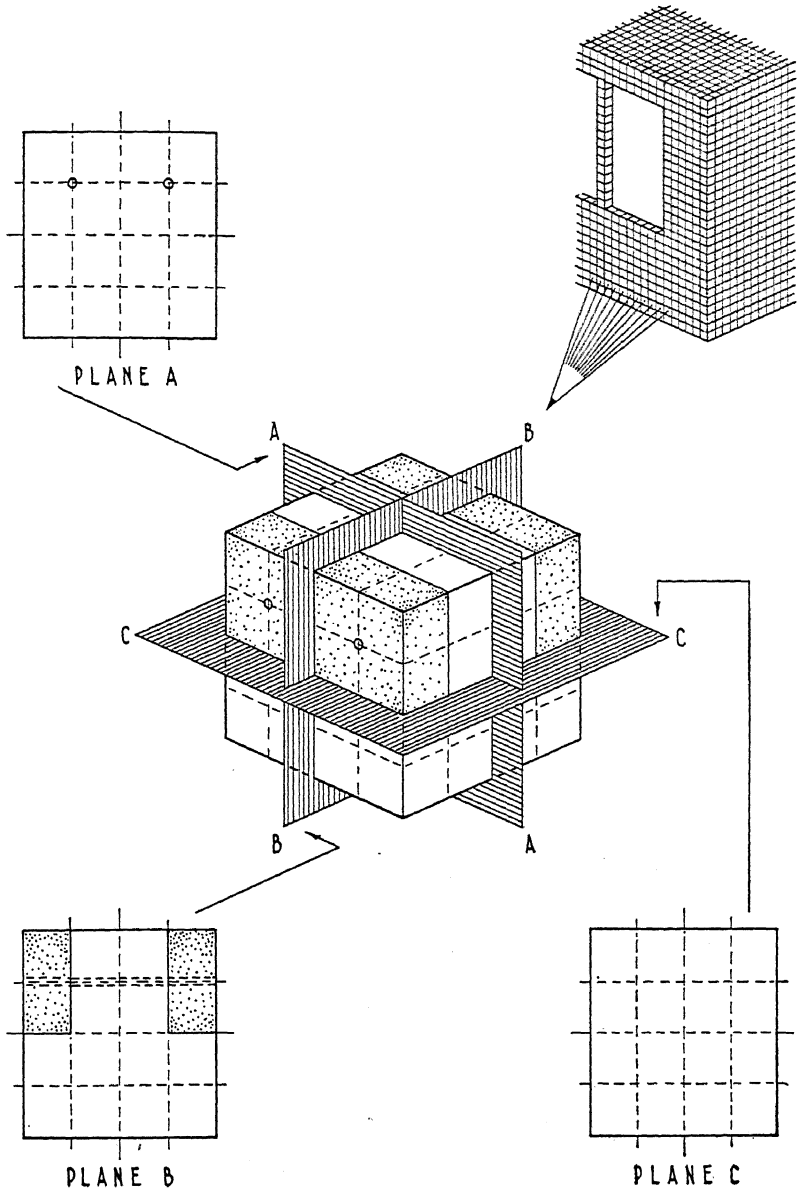

FIG. 29. AXIAL PLANES—DIFFERENTIATION OF FUNCTION

A marginal cube of a structural member is shown subdivided into its 64 tertiary cubes. The specific function of interconnection is assigned to the small shaded cubes. The member thus designed is symmetrical about modular axial planes A and B, but asymmetrical about C

For the all-important practical task of designing interconnection parts and abutting portions of members connected, the cube must be symmetrically subdivided, and that it can be divided and subdivided is the potentiality conferred by its axial planes. These provide the required versatility and yet define the interfitting relationship between elements of the modular structure, with standardized distribution throughout. A feature such as the groove for a spline, located by points, lines, and planes in one cube, can be reproduced throughout a cube group as a standardized feature for all similar members; and complementary features can be similarly designed in other members.

Potentiality of Surface

The potentiality of the cube as to its surfaces is most particularly concerned with the differentiated type of construction, as it has to do with the features applied outside the normal structure. It is through its six sides of identical dimension that the modular cube controls other constructions related or juxtaposed. The traces of the axial planes upon the surfaces of the cube and the extension of these planes outside of the structure enable the module to dimension and locate juxtaposed elements, whether contained within the structural member or applied to it. Only those surfaces of the cube which provide the outer faces of the structural cube groups are thus used as plane modules of design.

This aspect of the potentiality of the cube is essential to both types of construction mentioned previously — the integral type, and the supplementary type with parts placed upon but lying outside of the structure. These latter are controlled by the modular cube, for the exposed surfaces of the cube provide plane modules for the application of accessory detail, including finish. These plane modules, or modular squares, define the dimensions and the location of any parts to be juxtaposed (Fig. 30). The axial planes divide each side into four secondary plane surfaces, allowing, as in the case of volume potentiality, both symmetry in the design of the part to be attached and dissimilar

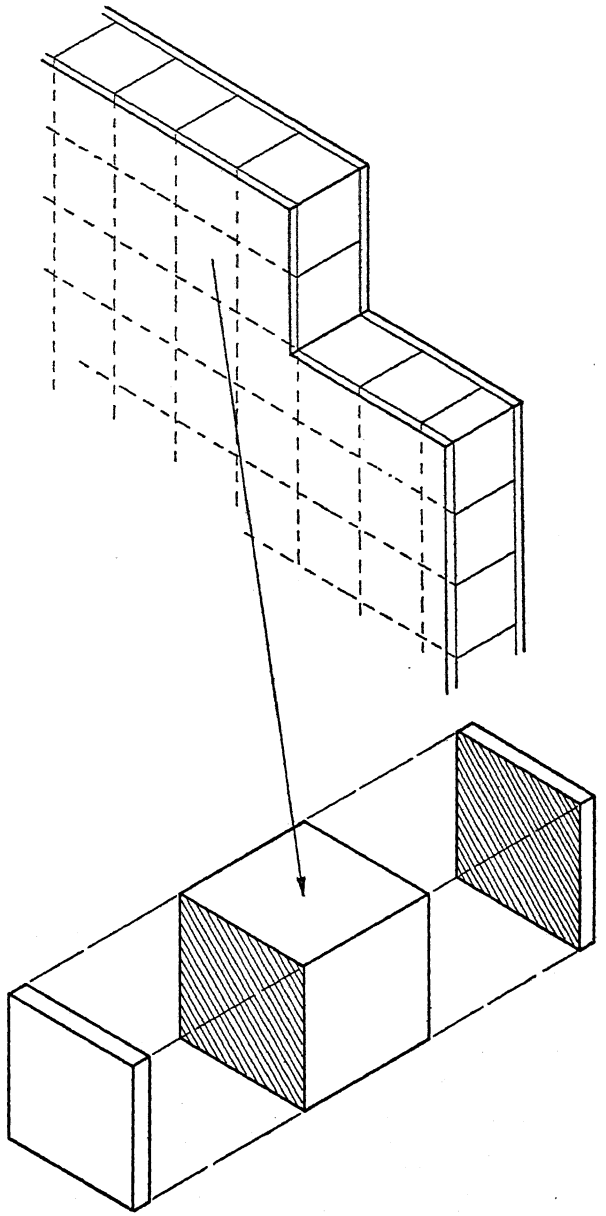

FIG. 30. SURFACES OF THE CUBE AS PLANE MODULES

A structural cube is shown with parts outside the structure on either side. These supplementary features are pulled away from the cube surfaces in the drawing to expose the areas controlled by the plane module

function. Central lines, and particularly central points, provide foci for connection with parts outside the structural wall. In other words, construction to be superimposed or added will be dimensioned, located, and attached by means of the surfaces of the cube module and the projection of its axial planes. Thus the cube potentiality of surface permits the modular design of all the parts not included within the matrix of the structure.

The surfaces of jointing cubes have particular significance in the design of parts or members lying outside the structural wall or superimposed upon it. The extensions of their surface planes define the dimensions and locations of the interconnecting means used for the attachment of the parts outside the structure. The extensions of the axial planes of the secondary jointing cubes define the lines and focal points of connection along the joint (Fig. 31).

Each of these three aspects of cube potentiality includes the power to repeat the features of a particular cube in any other cube whose general function is the same. This constitutes the chief potentiality of the cube as a module. Each cube in the total matrix of cubes, while retaining its essential conformity with other cubes, has the power to define and repeat any special function. Any cube can fix the points that specify the function, position, and dimensions of any element. Also, for any point, line, or plane within any cube a corresponding point, line, or plane can be automatically located within any other cube. It is therefore possible to locate and repeat wherever desired any particular feature required, whether it be that of structure or joint, or be merely accessory (Fig. 32). And lastly any cube can define the means of interconnection between one part and the next, and make possible the transference of modularity throughout the structure.

According to the cubical modular method, therefore, every house member can be designed within a cube matrix. The cube, as a basis of design, provides more than a mere geometric six-sided figure. Within it may be specifically located all the special

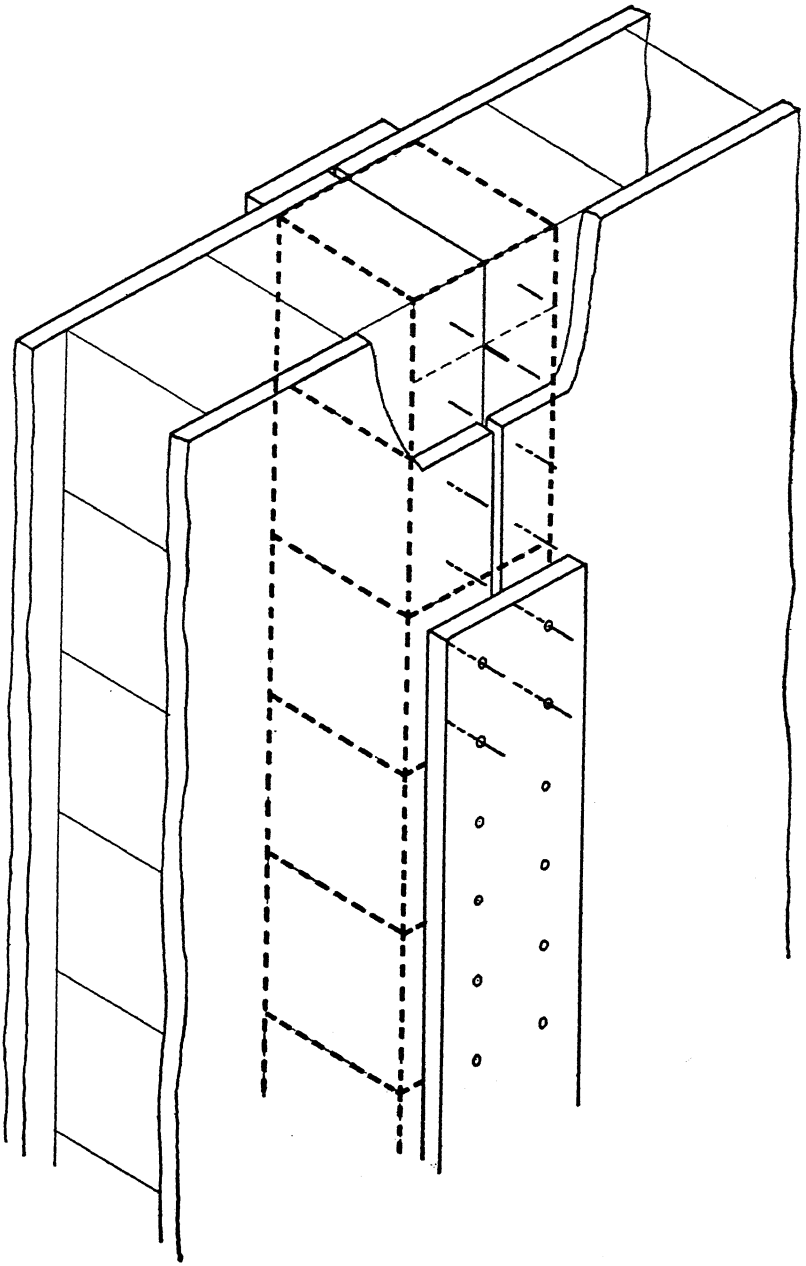

FIG. 81. FOCAL POINTS OF INTERCONNECTION FOR PARTS OUTSIDE THE STRUCTURE

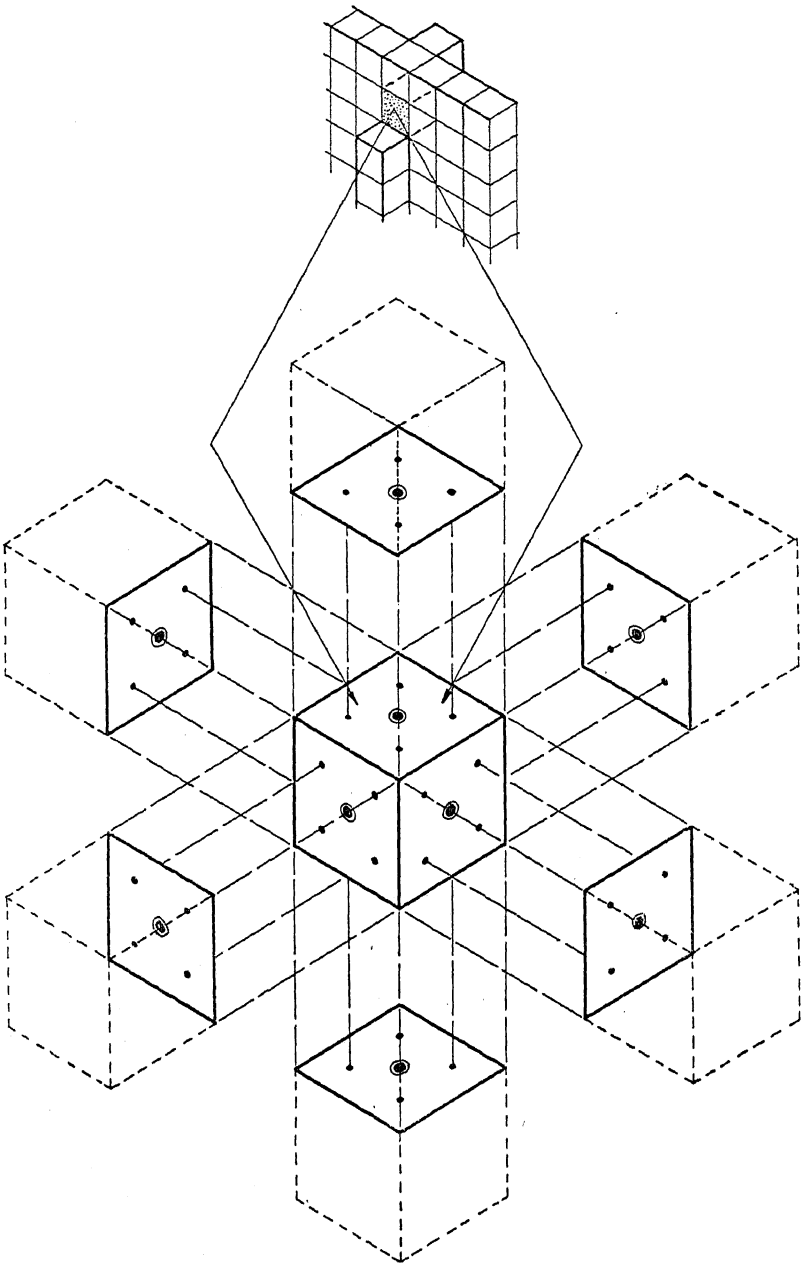

FIG. 32. POTENTIALITY OF THE CUBE TO REPEAT ANY FEATURE

and particular requirements of structure: dimensions, design, interconnection in any one of the three directions. Through its potentialities as herein reviewed, the cube assures qualities of unity, variety, and symmetry for structures designed in accordance with cubical modular principles.

CHAPTER VI

The Theory of Cubical Modular Design

THE basis of the cubical modular method is the simple and obvious geometry of the cube; its goal is the standardized design of structure in the three-dimensional space relations of its component parts. The method itself consists of the application of a body of abstract principles to practical design, principles that are abstract because they are stated in terms of cube geometry, and because they are the necessary and sufficient conditions for ideally complete standardization of design. The development of these principles is set forth in this chapter; the following chapter discusses some of the problems that are met in their practical application.

Principles and theory are developed in a series of propositions or Cases, with text and graphic demonstrations. Before embarking on this development several prefatory statements must be emphasized. A difficult, because abstract, and fundamental conception is to be developed as nearly simultaneously as possible from three points of view; (1) the integrity of the cube as a module of design, (2) the adequate performance of function, and (3) the actuality of structure and jointing. In other words, structural parts are to be designed at once as members defined by cube groups, as functioning members, and as physical house parts. To prove the validity of the theory it must be shown that each member of the structure can be designed within a cube group as a matrix, as a functional unit and as an actual portion of a house that can be jointed to the rest of the structure by practical means. The Cases must demon-

strate that all this is possible. Necessarily they proceed by demonstrating one point within restrictions, then another.

While the principles that will be developed in these Cases are essentially abstract truths, it is not always possible to limit the discussion to abstractions. Practical aspects have always to be considered, and the problem of jointing is of primary importance. The design of modular house parts cannot be considered apart from the basic problems of jointing. The highly differentiated functions of the elements of actual structure must be borne in mind — strength, alignment, resistance to moisture and heat, insulation, protective and decorative finish — yet for purposes of theoretical demonstration these complexities must be simplified into successive propositions in order that these Cases may present a clear statement of the principles of the method. Step by step they advance from the hypothetical simplicity of the monolithic into the complexity of composite, functionalized structure. And in the examples, woods, metals, cast materials are assumed as generally representative of specific materials, without all the allowance for varying properties that will be defined in the succeeding chapter. The drawings and the text are purely illustrative, although in some instances relationships are demonstrated by specific parts and shapes. While the abstract truths presented are both necessary and sufficient for a system of three-dimensional standardized design, within the scope of this book it is impossible to meet every possibility of variation in design or every question of practical manufacture. No attempt is made in this chapter to illustrate all types of construction, either conventional or experimental; no one type of construction is demonstrated completely. However, the following Cases cover the major problems of house design and indicate a general method of attack for other problems and other types of construction.

Cube Groups as Matrices for Practical Design

The structure of a house as delineated within the total matrix of cubes is divided primarily into separate sections that repre-

sent walls and floors and the intersections of these that represent the main framing members. These large groups of cubes could be used as matrices for the design of these various sections of the structure. Each whole wall and the floor for each room could be designed separately as independent units of the structure, and then aligned and interconnected with the main framing members as formed within their cube groups. But in actual erection such units would be too large to be handled economically. Furthermore, a method of design limited to this one type of construction would be much too restricted to have broad application to the housing problem. The cubical modular method provides for the design of members according to a wide variety of constructions, including both the conventional types and the more recent and experimental constructions intended to increase the opportunity for shop fabrication.

By dividing the main groups of cubes into smaller groups that exactly correspond to the individual members of any particular construction, a flexibility of design is achieved sufficient to meet any type or variation of construction. These smaller groups of cubes then become practical matrices for the design of each member of the structure. The original location of each cube in the total matrix, according to the demonstration of the preceding chapter, remains unaltered. Adjacent matrices are contiguous, that is, their edges are defined by a common plane, the central plane of the joint between the two members.

There are certain general functions that house construction must perform adequately. For example, it must have sufficient strength and rigidity; it must have reasonable durability under conditions of exposure and wear; its surfaces must provide suitable finish for either outside or inside walls, floors, or ceilings; and finally, the house should afford sufficient resistance to the flow of heat to make it economical to heat in cold weather and reasonably comfortable in warm weather. These may be termed the broad functions of the house, and the parts needed to perform these functions are its essential components.

It has already been stated that, according to the type of con-

struction, the parts essential to the finished house may or may not be contained entirely within the structural matrix. These parts as they are constituted at the time of erection on the site are called " members." This usage of terms implies a distinction between erection and such pre-manufacture and assembly as may be done in the shop previous to erection, and this distinction is the basis for classifying construction into two general types: the integrated and the differentiated. In integrated construction each member possesses within it the physical properties needed to fulfill the particular functions of house construction appropriate to the space occupied by the member. On the other hand, completely differentiated construction employs separate and distinct members or parts to perform each of the several functions. The degree of differentiation may vary according to the design and the properties of the specific materials employed. Thus a construction of pre-fabricated and pre-finished wall and floor units typifies the integrated construction, while the conventional wood frame and steel frame are well-known examples of the differentiated type.

The various arrangements of cube groups that are possible for integrated constructions will be discussed first. For these constructions a cube group always corresponds to and represents in size and location a pre-fabricated and pre-finished member of the structure. It does not indicate or define the smaller elements that are formed and assembled into the composite member in the factory.

Most types of construction, whether integrated or differentiated, use main framing members such as posts and girts. The cube groups representing posts are formed by the vertical lines of cubes common to two adjacent walls at their intersection. In length they extend approximately story height. In width and thickness, they are normally equal to the thickness of the adjacent walls. Girt groups are similarly formed at the intersections of walls and floors and are horizontal lines of cubes, of the same depth as the floor and the same thickness as the wall. The cubes that lie at the intersections of posts and girts may be

treated variously according to the requirements of the construction. Three arrangements are indicated in Fig. 33. They

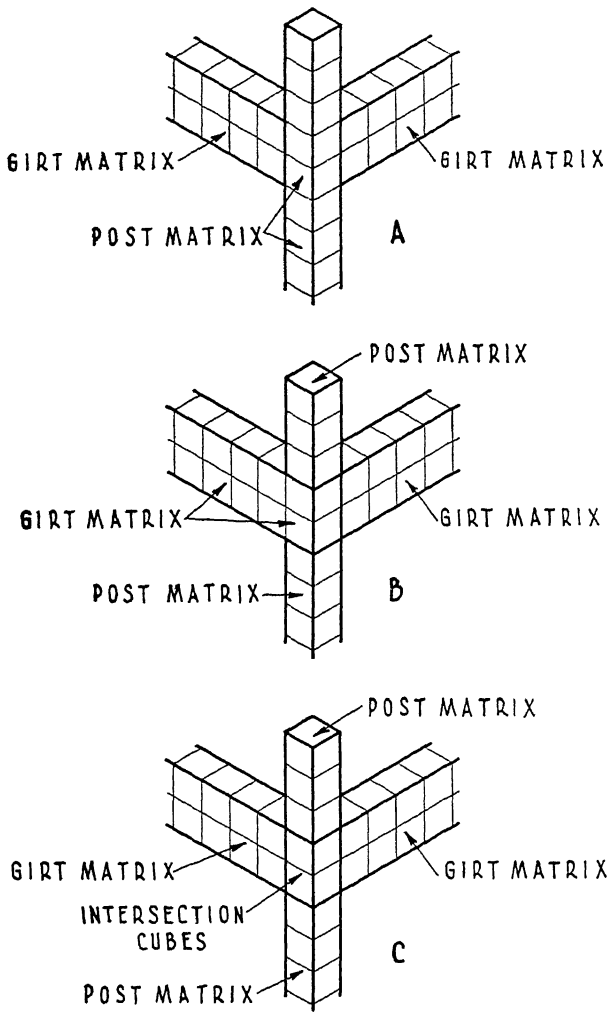

FIG 33. CUBES OF GIRT AND POST INTERSECTIONS

may be considered as belonging to the post cube group, and the girts will then end at post surfaces as in Drawing A. Or it may be preferable to consider these cubes as belonging to one of the

girts; the girt at right angles will then be butted to its side and the posts above and below will be cut off at the girt surfaces. Drawing B shows this arrangement. The standardization of parts may require a separate member at these framing corners, as in Drawing C, and the intersection cubes will then be treated as a separate group. It would also be possible to bring the girts together symmetrically with miters at their ends, but special end cuts and mitered joints are not recommended for modular design.

The main cube groups representing sections of walls and floors may be divided into smaller groups of size and arrangement to suit any integrated construction. As in Fig. 34, the walls may consist of vertical members, of long horizontal panels, or of smaller rectangular units. The floor units will correspond to the span in length, but their width may be any number of modules. The thickness of walls and floors will be modular, but otherwise controlled by technical considerations of strength requirements. Both wall and floor members stop normally at girt surfaces, and walls extend to post surfaces.

An important variation of this arrangement occurs in platform construction, where the floor cube groups extend through the walls, include the lines of cubes that would normally represent girts, and cut through the posts. The main framing members usually serve both as load-bearing and as aligning and interconnecting means. When the function of load-bearing is performed by other parts of the structure and the framing members are aligning and interconnecting means only, their structural cube groups may be omitted and the interconnecting means may be designed within appropriate jointing matrices. Thus the girt cube groups may be entirely omitted, as is shown in Fig. 35 by Drawing A, or else small groups may be taken above and below the floor to represent members that will serve as positioning and aligning means for the walls, as in Drawing B.

In another arrangement of girt cube groups the walls pass by the floors and are continuous from one story to the next

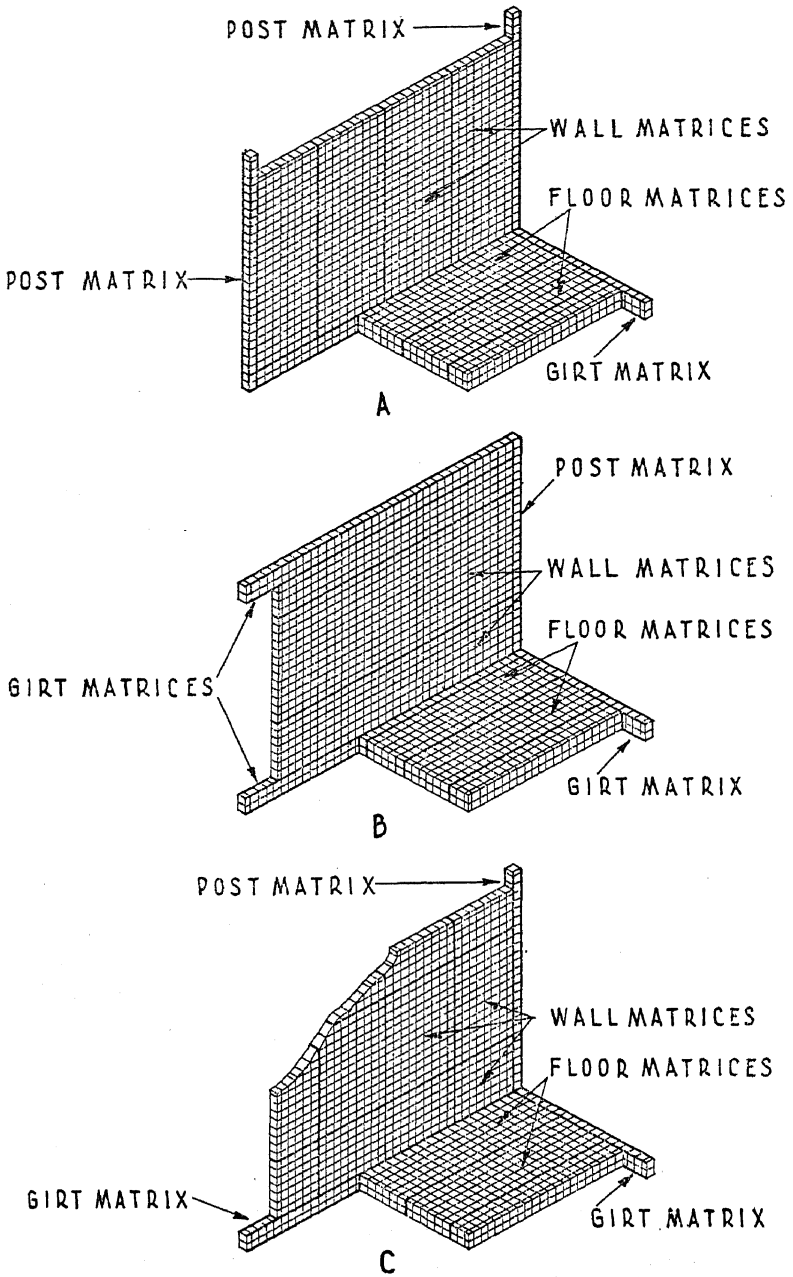

FIG. 34. CUBE GROUPS OF WALL AND FLOOR

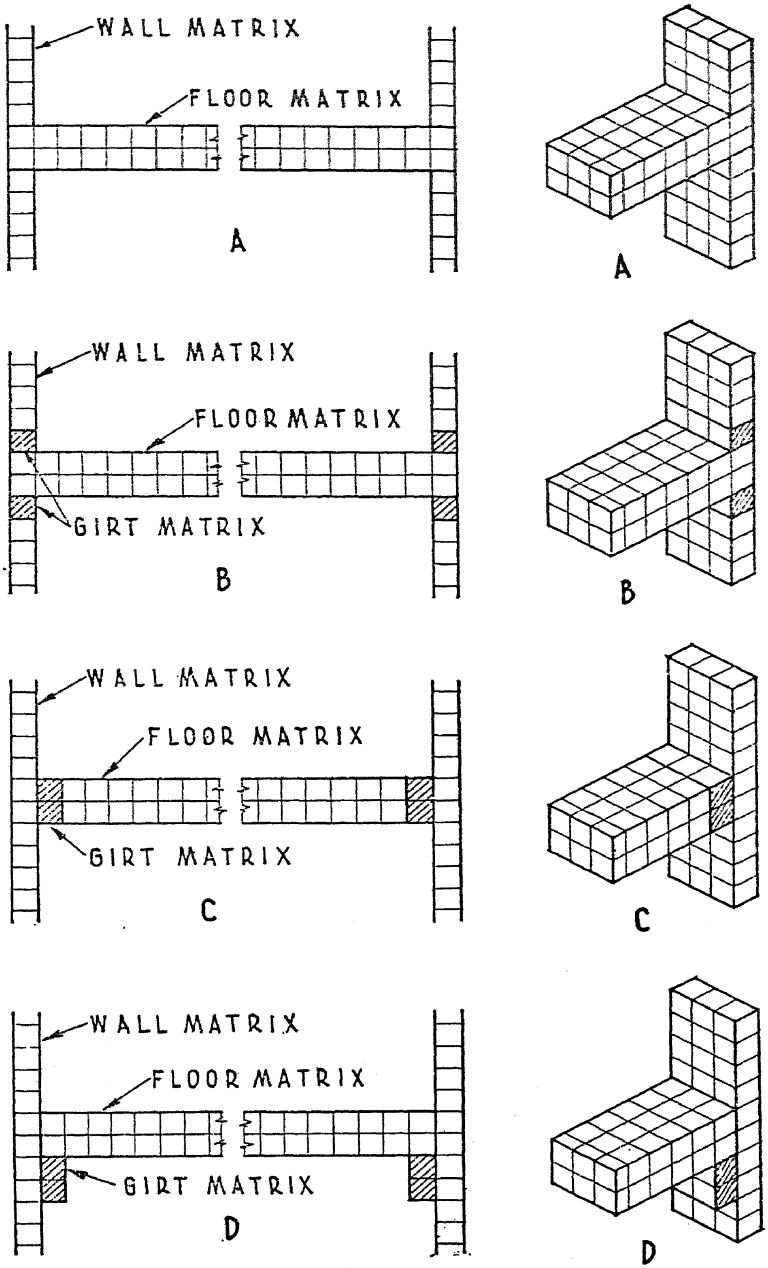

FIG. 35. ALTERNATIVE ARRANGEMENTS OF GIRT CUBE GROUPS

above. The girts are then placed against the walls and the floors may either be attached horizontally to the girts, as illustrated by Drawing C, or else above and bearing on them, as in D. Combinations other than those shown are entirely permissible.

It has already been shown that the design of the jointing between the various parts of the structure is fundamentally important to the theory of modular design, and that joints are restricted by matrices placed symmetrically with respect to their center planes. These matrices are cube groups, one module wide, overlapping and extending a half module into the margins of the two contiguous structural cube groups. They are necessarily of the same thickness as the structure, and for integrated construction they extend the full length of each straight line joint, as is illustrated in Fig. 36. At the right of the illustration a joint matrix is shown separated from the structure in order to demonstrate more clearly the locations of the principal planes of the jointing cubes.

The drawing at the left of Fig. 36 shows portions of five cube groups that might represent members in a wall section. The groups are lettered A, B, C, D, and E, respectively. The various joints can be designated by the letters of the groups that they connect; for example, BE is the joint between groups B and E. It is seen that joints BC and EC lie in a vertical straight line and that their matrices can be considered as a single jointing cube group. Stated a little differently, C represents a long member with both B and E jointed to it along one of its edges. Joint BE is perpendicular to joint (BC, EC) and at their intersections the two matrices overlap as is indicated by the shaded areas. A similar overlapping of jointing cube groups occurs at the intersection of joints (AD, BE) and (AB, DE). It is evident that the secondary jointing cubes located at any corner of a structural cube group define a space that is common to the matrices of the two joints that intersect at the corner. This overlapping is pointed out here, because in the design of parts within these spaces the means of connection for one wall member cannot overlap that of the other.

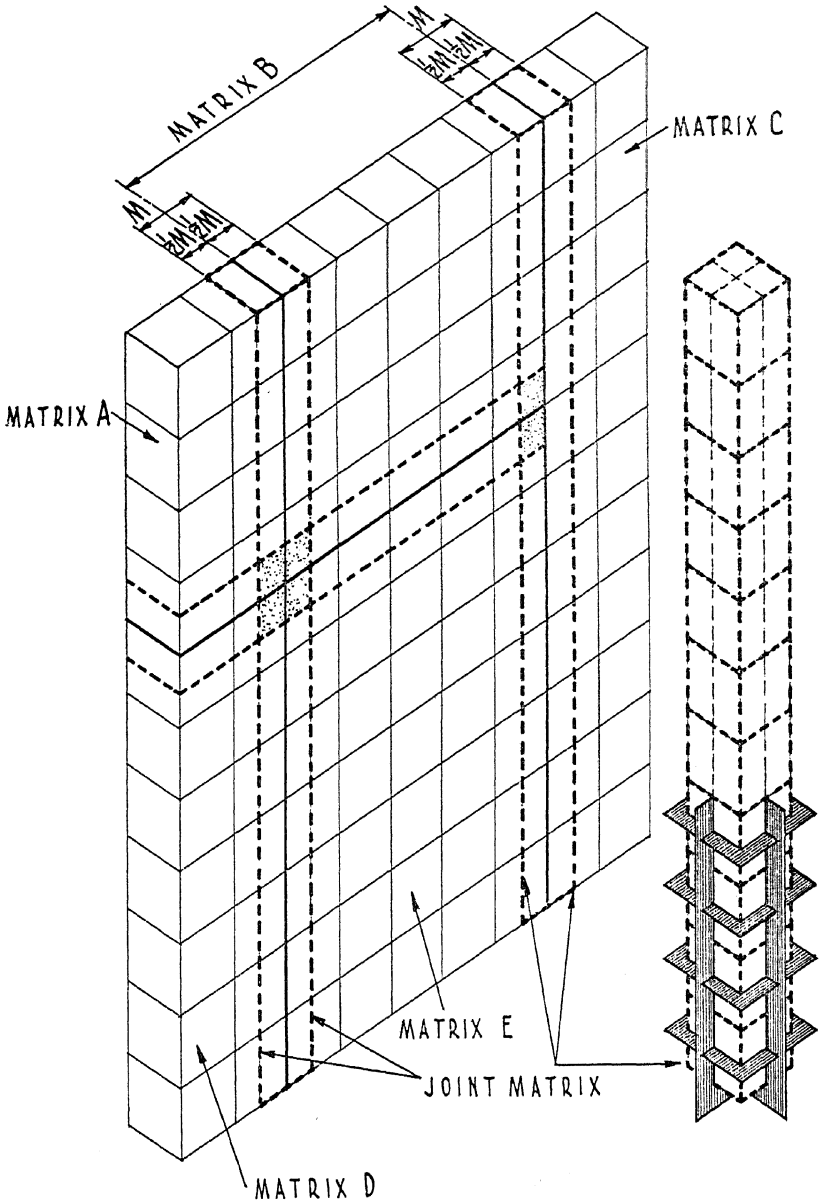

FIG. 36. JOINTING CUBES IN A SINGLE PLANE

Illustration at the right shows joint cube group pulled out from structure to illustrate the locations of the principal planes of the jointing cubes

The jointing matrices shown in Fig. 36 connect members that lie in a single plane of the structure and might be part of one wall section. In connecting perpendicular walls through a post or a wall and a floor through a girt there is an overlapping of jointing cube groups within the main framing members. Fig. 37 demonstrates the possible combinations of intersection between walls, and between wall and floor. The portions of the jointing cube groups that overlap are shown at the sections through posts and girts. In the two-way wall intersection at B the overlapping occurs in the vertical line of secondary cubes of the post matrix, placed opposite the inner corner, and includes a quarter of the normal post space. In the three-way intersection at C the overlapping includes two columns of secondary post cubes, or one-half the total post space. In the four-way intersection at D the overlapping includes the entire matrix of the post. The overlapping at K is the usual condition that occurs at the corners of structural members as was shown in Fig. 36. At the room corners such as H and J both conditions of overlapping occur, that at the corners of two wall cube groups and one floor cube group and at the same time that within the post and both girt matrices.

Two degrees of overlapping occur within the girt matrices. In the girt matrix in an outside wall the floor is attached to one side only, as shown at F, and two lines of secondary cubes are common to both wall and floor joints. At G the girt matrix is between two floors and the overlapping includes four lines of secondary cubes. It is evident that, to prevent interference, the individual joints must be located within limited portions of their matrices and that their design will be severely restricted by the small space available. Furthermore, after the jointing features have been provided for, very little space remains within the matrices for posts and girts of adequate cross-section.

This overlapping within posts and girts so restricts the design of jointing that it may be desirable to modify the arrange-

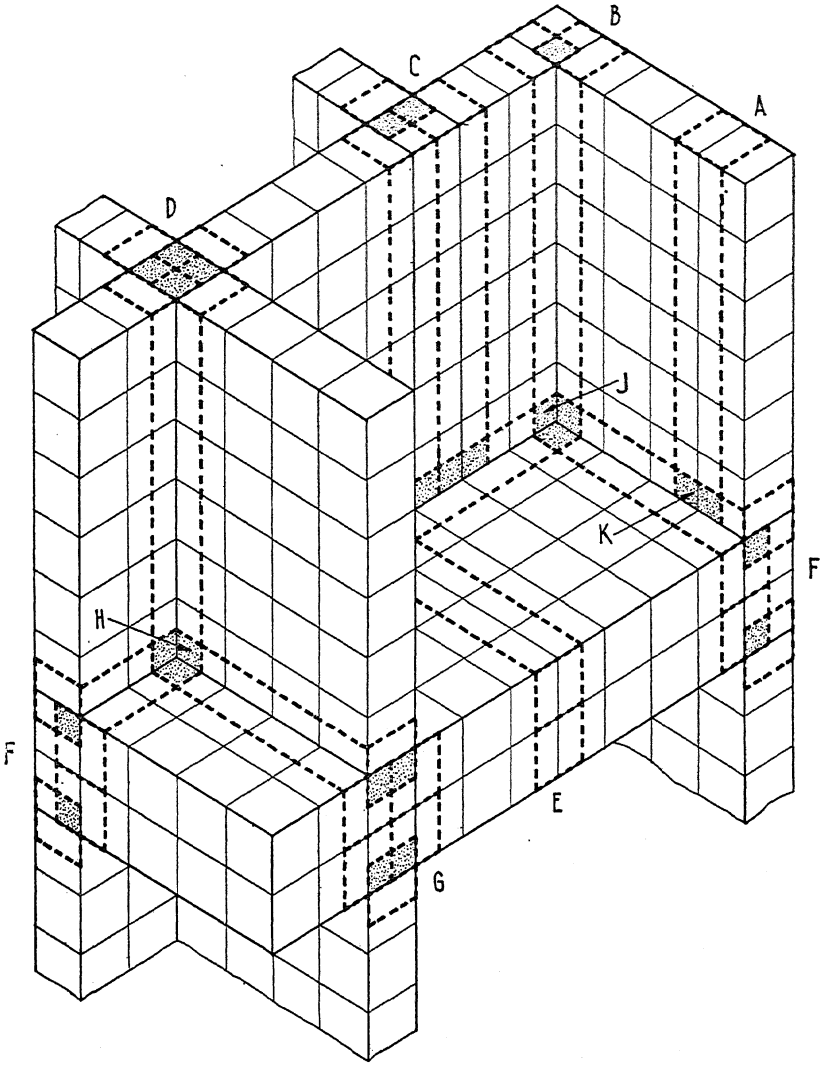

FIG. 37. JOINTING CUBE GROUPS IN THREE PLANES

A—Jointing cube group of wall
B—Intersection of wall jointing cube groups at 2-way wall intersection
C—Intersection of wall jointing cube groups at 3-way wall intersection
D—Intersection of wall jointing cube groups at 4-way wall intersection
E—Jointing cube groups of floor
F—Intersection of floor jointing cube groups with wall
G—Intersection of jointing cube groups of two floors with wall
H—Intersection of jointing cube groups of two walls and two floors
J—Intersection of jointing cube groups of two walls and one floor
K—Intersection of jointing cube groups of one wall and one floor

ment of cube groups so as to provide more space for the joints and for the framing members. One possible rearrangement involves taking different sets of cubes to represent the posts and girts. By transferring the vertical lines of structural wall cubes that are adjacent to the normal post group from the wall groups to the post group, the post is extended one module in the direction of each contiguous wall and each wall group is narrowed correspondingly. This results in posts, the cross-sections of which are not squares, but rectangular assemblies of squares. Drawing A of Fig. 38 is a horizontal section of a post matrix at a two-way wall intersection, and shows the L-shaped outline of the post matrix. For a three-way wall intersection the post matrix would be extended one module in the direction of each of the three walls, and its section would appear in the form of a " T." Similarly, at a four-way wall intersection the outline of the post matrix would complete a symmetrical cross. Drawing A demonstrates that the jointing cube groups cannot overlap within posts that are thus extended. This rearrangement of structural cube groups sacrifices the highest degree of standardization of post cross-sections, as it requires at least three distinct types.

The overlapping of jointing cube groups that occurs in the normal girt matrix is avoided, when the girt matrix is extended upward and downward one module, by transferring horizontal lines of structural cubes from the walls to the girt. Drawing B of Fig. 38 shows the vertical section through a girt matrix that is extended to four modules in depth. The matrices of the contiguous wall and floor members are cross-hatched. The outlines of the jointing cube groups are indicated by heavy dotted lines, and their location demonstrates that overlapping within the girt no longer occurs. In the illustration, a single floor member is jointed to one side of the girt. If another floor member were jointed to the opposite side of the girt, the matrices for the joints between the girt and the two floors would meet at the center of the girt. Consequently, jointing elements could not extend the full depth of their matrices without cutting entirely

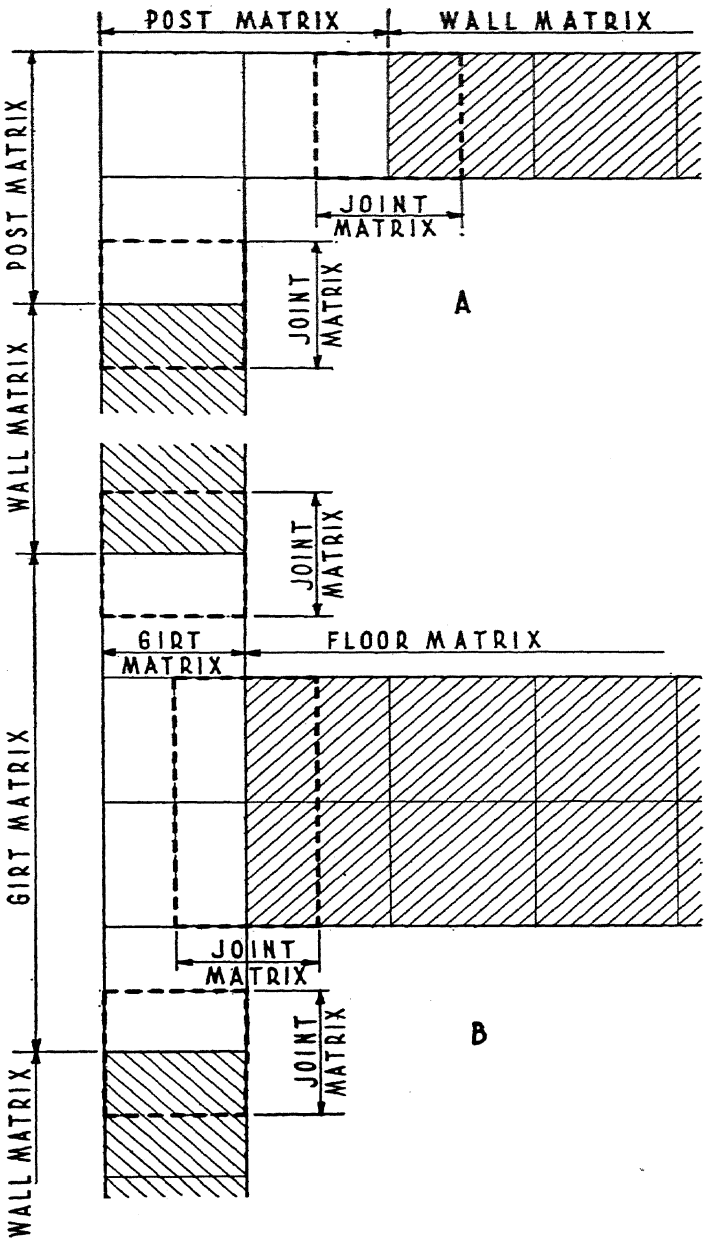

FIG. 88. POST AND GIRT CUBE GROUPS EXTENDED INTO THE WALL

A—Horizontal section

B—Vertical section

across the girt. The design of jointing would thus be restricted by the primary requirements of girt cross-section.

Greater flexibility in the design of girt jointing may be provided by extending the girt matrix one module in the direction of each floor. Fig. 39 illustrates in vertical section the shapes of girt matrix that result. Drawing A shows the girt extended on one side only to suit the conditions at outside walls. The form of the girt with floors attached on either side is shown in Drawing B. In both of these views the floor depth is two modules, and for other depths of floor the horizontal projections of the girt would always be that of the floor. These arrangements of structural cubes require at least two distinct shapes of girts, and the highest degree of standardization is sacrificed to that extent. The outlines of the joint matrices are shown in heavy dotted lines, and their location is such that their overlapping within the girt matrix is avoided. Also the space remaining for the design of the girt is ample.

A third arrangement of cubes for the girt matrix is possible. By extending the girt horizontally in the direction of the floors and not vertically into the walls, there is defined a cross-section of the same depth as the floors and either two or three modules thick for the attaching of floors on either one or two sides. This arrangement also effectively avoids the overlapping of jointing matrices and provides ample space for the design of the girt itself.

It will be noted from the foregoing demonstration that overlapping of jointing means would be avoided equally well if the matrices of the principal framing members extended into the matrices of wall or floor to the extent of only half a module. In order to obtain a grouping of cubes that represents this arrangement of framing members it is necessary to transpose the functions of the structural and jointing cubes. Lines of original matrix cubes are then retained at wall and floor intersections and at the joints in the walls and floors. The wall and floor members are represented by groups of jointing cubes. This grouping is illustrated in Fig. 40. The post matrix con-

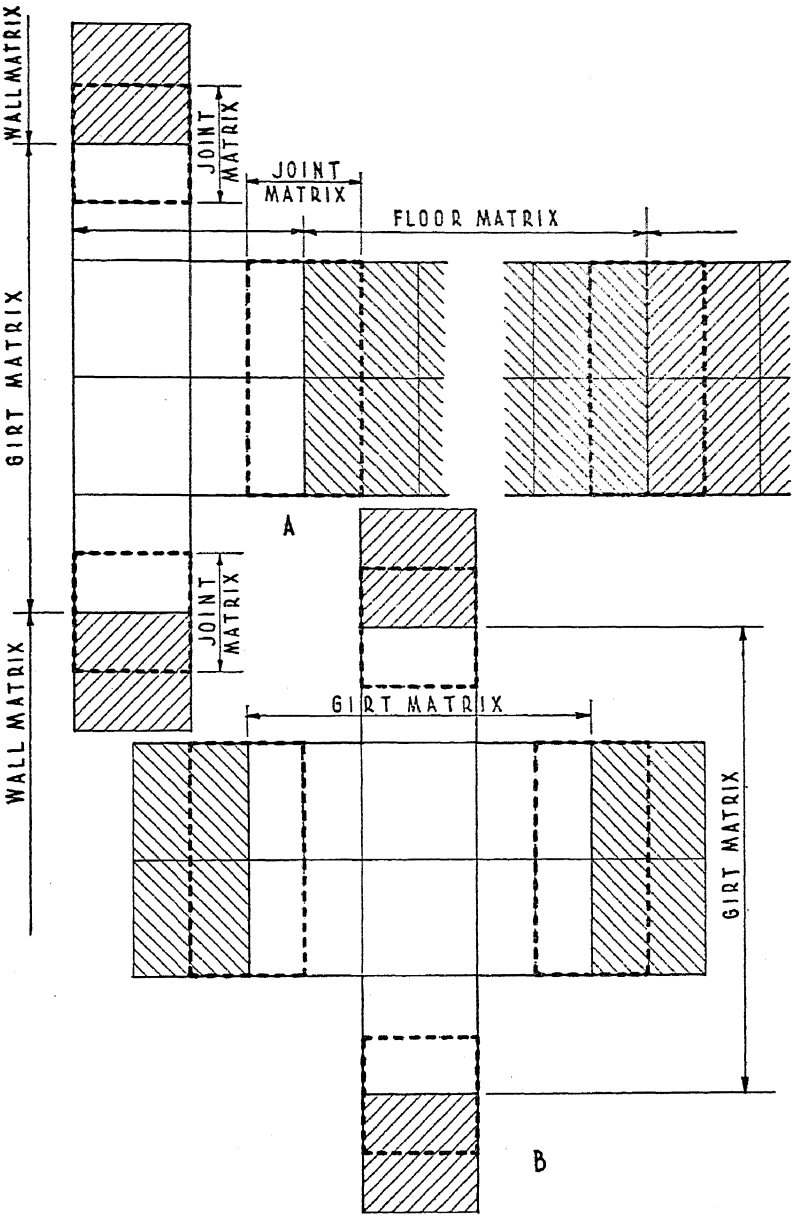

FIG. 39. GIRT CUBE GROUPS EXTENDED INTO WALLS AND FLOORS

A—Vertical section at outside wall

B—Vertical section at inside wall

sists of the normal intersection cubes and a line of cubes for each joint of the post to adjacent wall members. The girt matrix likewise consists of intersection cubes and a line of cubes for each girt joint. This grouping is consistent with the function of posts and girts as interconnecting means for the entire structure. In some actual constructions this method of design may prove desirable, but in this chapter it is preferable to avoid the confusion of introducing alternative methods and to adhere to the original matrix grouping by confining the exposition solely to the basic conception.

So far, this demonstration has been concerned exclusively with integrated structure. The distinguishing feature of most types of differentiated constructions is the assignment of the functions of strength and aligning to secondary framing members, such as studs and joists. The parts that supply the continuous surfaces of walls and floors and perform the function of finish are separately applied and attached to the framing. The usual location of these surfacing and finishing features is outside the framing. However, there is no theoretical objection to placing them between the frame members within the structural matrix. If this arrangement leaves surfaces of the framing members exposed as portions of the finished walls and floors, they must then have properties suitable for this purpose. Cube groups can readily be found that correspond to this construction. Vertical lines of cubes in the walls provide matrices for the studs and the cubes in between them constitute a matrix for the filler panels. The usual jointing cube groups are placed between studs and panels so that the entire construction is designed within structural matrices.

Even with the surface and finish parts placed outside the framing it is still possible to design all the members within the structural cube groups. The size and arrangement of the surface members or panels then determine the grouping of the structural cubes, so that the joints between adjacent panels coincide with the boundaries of the cube groups. As the edges of the panels are usually supported by and attached to a fram-

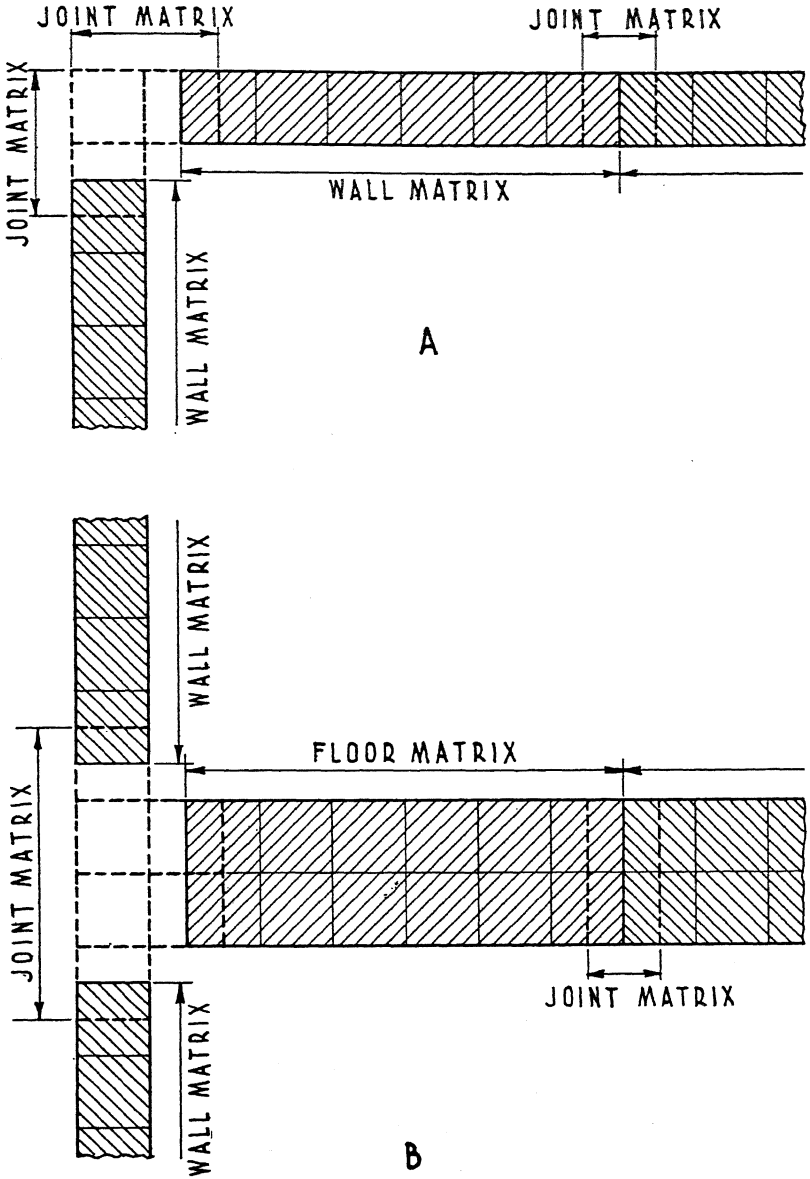

FIG. 40. POST AND GIRT CUBE GROUPS EXTENDED A HALF MODULE INTO WALLS AND FLOORS

Original structural cubes are retained at intersections of walls and floors and at each joint. Groups of jointing cubes are the matrices for structural members

ing member, the normal location of studs and joists is with their centers on a modular line between two cubes. In other words, they are designed within a joint matrix. In order that all parts may be located within the structural matrix the framing thickness must be less than that of the matrix, leaving sufficient space within the matrix for the surface members.

While this method of design is possible, it is more convenient to make the thickness of the wall framing itself the size of the module. The surface parts, if placed on the framing, must then lie entirely outside the structural matrix. This is the normal method of designing the conventional framed constructions. The surfaces of the structural cube groups provide plane modules that serve as matrices to control the size and location of the parts placed outside the structure. It is again necessary to design the studs and joists within jointing cube groups in order to place them under the edges of the superimposed parts. In Fig. 41, Drawing A is a horizontal section through the matrices of the structure at a two-way wall intersection with the stud matrices cross-hatched and enclosed in dotted lines to indicate jointing cubes. Studs are thus centered on the planes between adjacent structural cubes, and they may be placed on any of these planes as required. Drawing B is a vertical section showing the joist matrices cross-hatched. The joists are also designed in jointing cube groups, centered on modular planes. This arrangement of cube groups for framing assumes that the groups of structural cubes for walls and floors correspond to the surfacing features placed outside the structure. The jointing cube group between each of these structural groups is used as a matrix for a stud or a joist. If a closer-spaced framing is required for strength and rigidity, intermediate studs and joists may be placed on modular planes as required. This analysis of studs and joists conforms to their function as jointing and interconnection means for the various parts of the construction.

It has been assumed, even for framed construction, that ma-

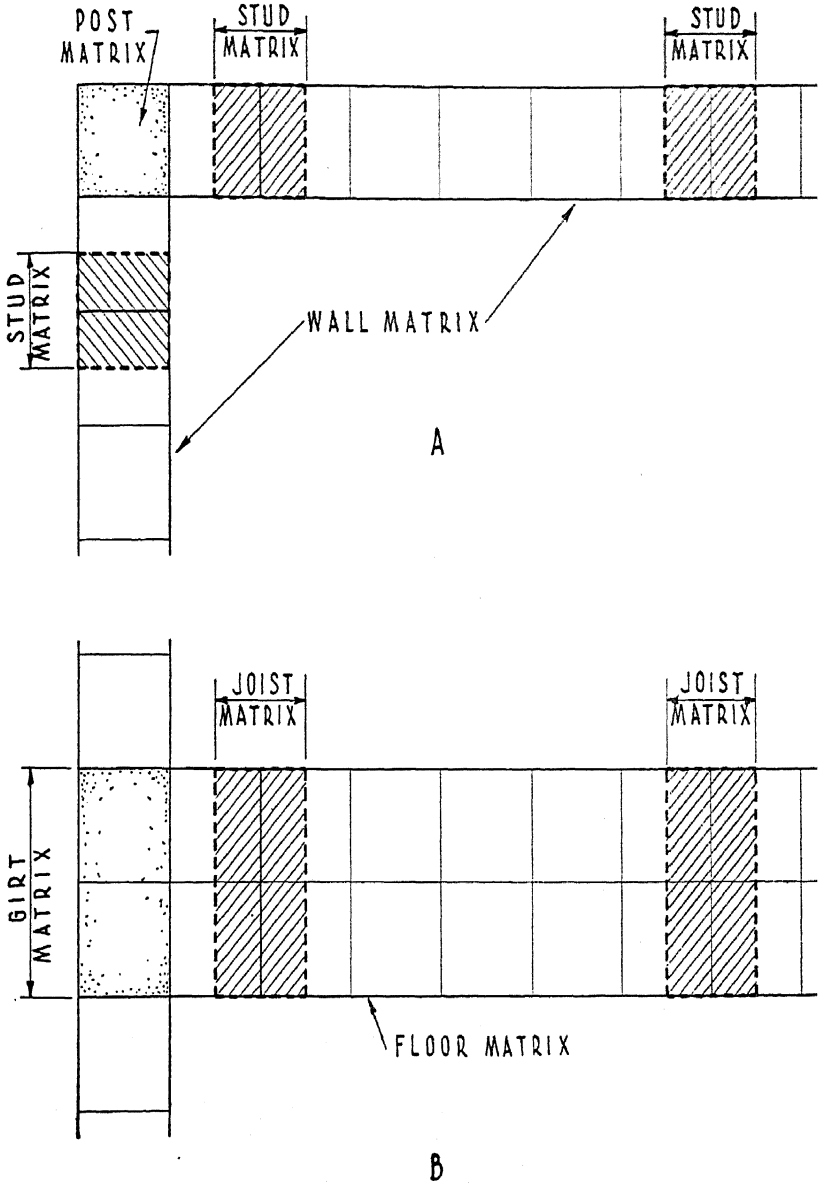

FIG. 41. CUBE GROUPS FOR FRAMING

A—Horizontal section through wall

B—Vertical section through wall and floor

terials are so used as to make possible some degree of prefabrication. The parts placed on the framing are capable of being pre-cut to exact modular sizes, so that they can be designated as "panels." This assumption precludes such conventional finishes as shingle siding, lath and plaster for walls and ceilings, and strips of wood laid in the usual manner for finished floors. Where these conventional finishes are employed, there is no object in requiring studs and joists to be designed in jointing cube groups. The convenient procedure would be to design such subsidiary framing within lines of structural cubes.

Matrices for the joints between framing members are indicated by the dotted lines of Fig. 42. The members usually intersect at right angles with the end of one butted against the surface of another. The jointing cube A in the illustration constitutes the matrix for the joint between a stud and a girt. Although the stud matrix is itself a jointing cube group, it is here outlined with solid lines to show more clearly its relation to the rest of the framing. The matrix for the joint between a stud and a girt fills half of the end cube of the stud, and within the girt it lies equally in the space of two adjacent structural cubes. The matrix B for the joint between a joist and a girt consists of two jointing cubes, since the depth of the joist is two modules. The joist matrix is also a jointing cube group, and hence the joint matrix is also centered on the plane between two adjacent structural cubes of the girt matrix. The figures shown in dotted outline at C are the matrices for the joints of two girts to a post each containing two jointing cubes. As all these members are represented by structural cube groups, the jointing cubes occupy a normal position, each filling halves of two structural cubes. The overlapping of the two joint matrices within the post matrix is the same as that of the joint matrices for connecting wall members to the post, shown in Fig. 37. If a stud and a joist are located at the same position along a girt, a similar overlapping of joint matrices will occur within the girt matrix. This overlapping of jointing matrices for

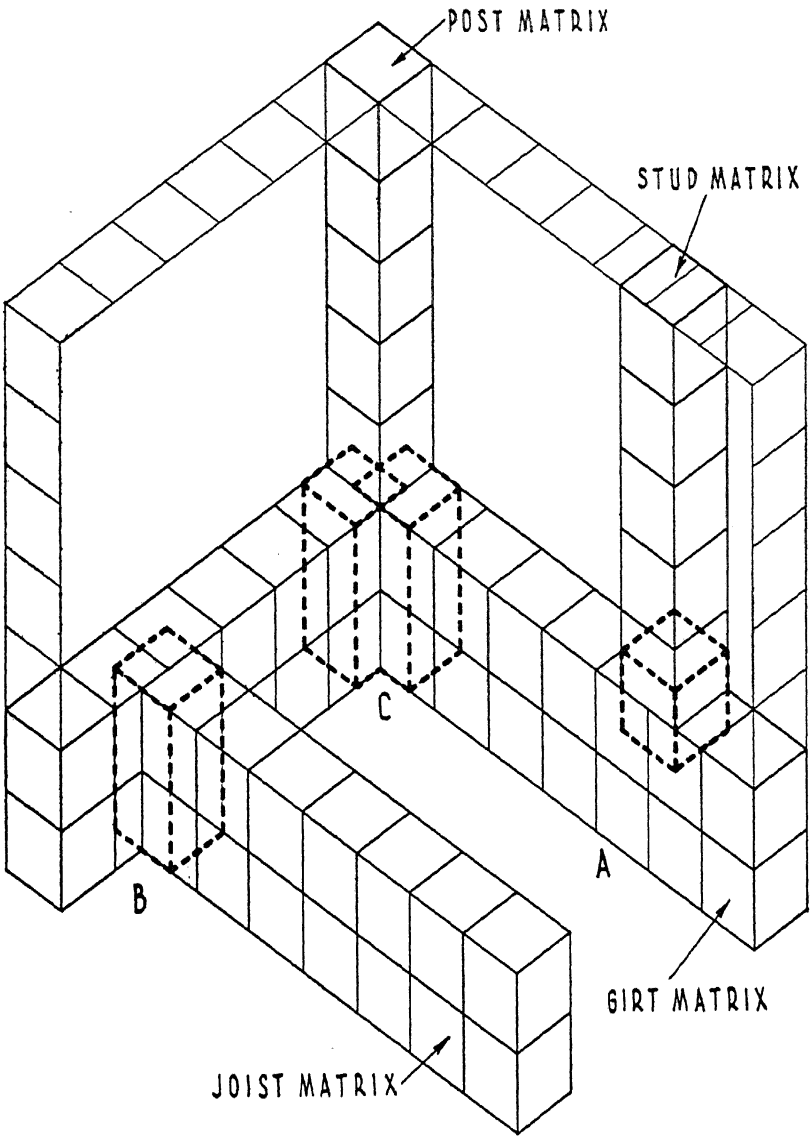

FIG. 42. MATRICES FOR THE INTERSECTION OF FRAMING

A—Jointing cube for connection of stud to girt
B—Jointing cubes for connection of joist to girt
C—Jointing cubes for connection of two girts to post

framing does not usually justify altering the normal post and girt cube groups.

The arrangements of cube grouping that have been discussed and illustrated provide convenient matrices for the design of structural parts for both the integrated and framed types of construction. The few alternative methods of grouping that have been mentioned indicate the degree of flexibility that is available to make the method adequate for any combination of these two types, or for any new construction that may be devised. The following six Cases will develop a set of abstract principles for the design of structural parts and their jointing within the matrices of cube groups.

Case I

The first Case is purely theoretical, a transition from the modular cubes as divisions of space to cubes of substance structurally related. This Case supposes an ideal substance as a building material, one that possesses all the physical properties required for house construction: adequate strength, durability, satisfactory surfaces for both outside and inside finish, and sufficient insulation value to reduce the flow of heat. Further, this supposititious material is assumed to be easily formed and transported. Cubes made of it can also be readily welded together by some new process that requires no separate bonding material. It provides, in fact, the means for the ideal house construction, fully pre-fabricated and integrated.

With this Utopian material an integrated structure could be built up of members that replace precisely the cube groups already provided. Small cubes of such material, and of the size of the module, are first fashioned in the factory. Then these cubes are welded together by the assumed perfect process into members that correspond to structural cube groups of suitable size and arrangement, the grouping having been pre-determined in accordance with the principles established for integrated constructions. These members are shipped to the house site, where the erection proceeds with the further aid of the magic

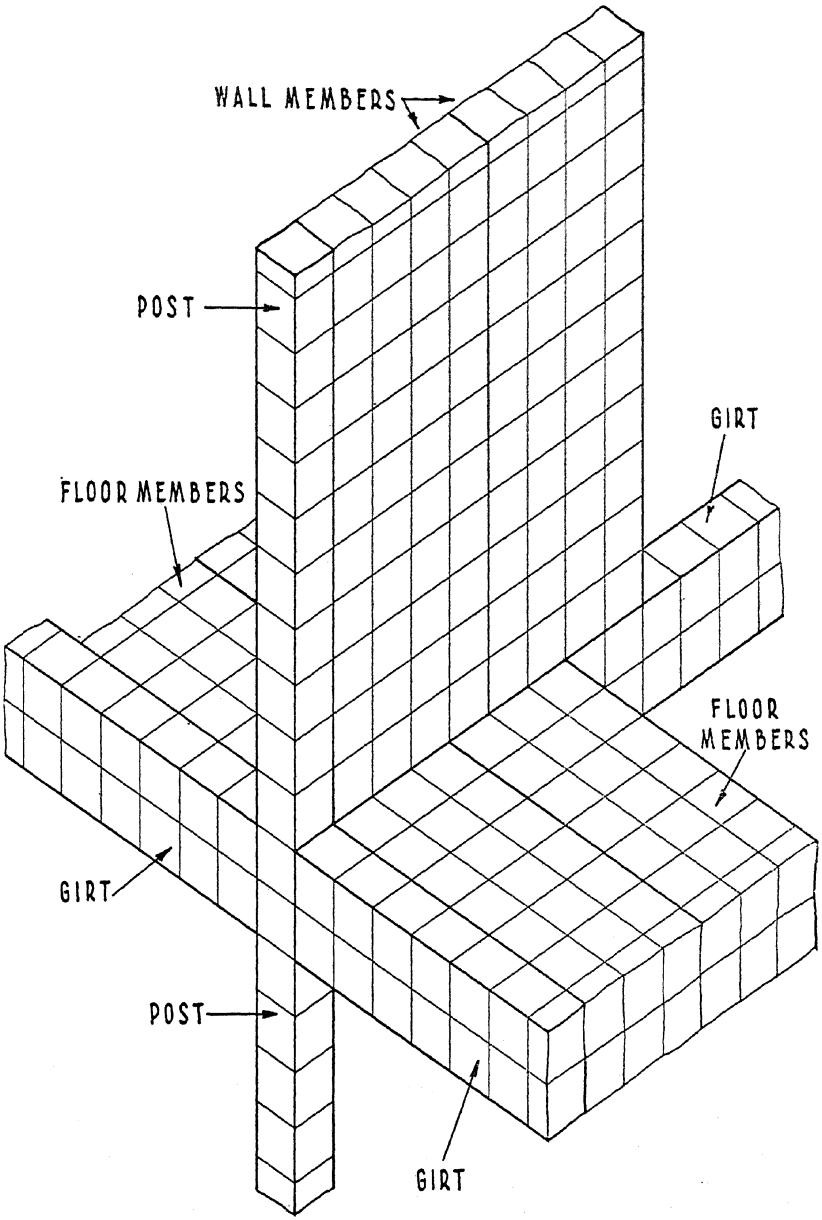

FIG. 43. ASSEMBLY OF IDEAL, FULLY INTEGRATED STRUCTURE

Wavy lines indicate broken sections

welder. First the main framing is welded together to serve as aligning and positioning means for the members of the walls and floors. Pre-finished doors and windows are included within individual wall members, so that by welding into place the wall, floor, and roof members, the erection is completed. Fig. 43 depicts a portion of the structure as it would then stand. The boundaries of the various members are indicated by heavy lines. Where the members are welded together no joint matrices are required, because no space is needed for bonding material and joints are completed without special features of design.

It is assumed that this house is devoid of non-rectangular features, such as a pitched roof, so that the entire structure is modular. Each face of each member coincides with a face of its matrix. From this it follows that every structural dimension is a multiple of M.[1] The parts are all symmetrical about each of their three principal axes, the ideal condition for the highest degree of standardization.

Although in practical design, using available building materials, this degree of perfection cannot be attained, one relationship, here found, is always essential for cubical modular design. Variety in the sizes of similar parts of the structure must always be limited to differences that are multiples of M. This limitation in the number of size standards makes mass-production methods practicable in the manufacture of house parts.

Case II

The preceding Case demonstrated the design of completely modular integrated structure, built of a building material ideal but obviously non-existent, and welded together by an imaginary process as yet undiscovered by modern science. The present Case assumes a similar building material but replaces the unknown welding by dimensioned jointing. It will not tax the imagination too severely to suppose that the ideal material can be cut and fashioned into the shapes required for the various types of joints. The marginal portions of structural mem-

[1] See Chapter IV, p. 56.

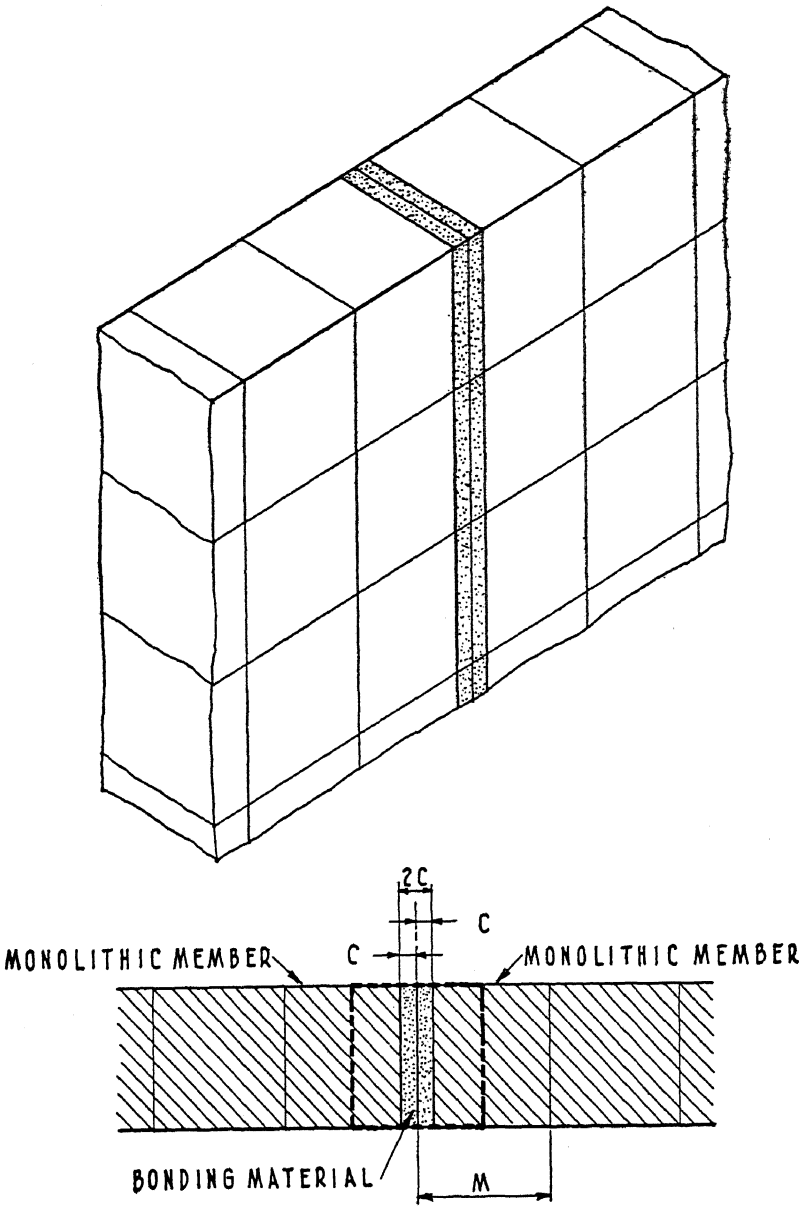

FIG. 44. MASONRY OR BONDED JOINT

Dotted lines indicate joint matrix; c indicates clearance of monolithic member from the face of its matrix

bers will be shown cut into various shapes, and it is assumed both that the material can be so shaped and that it possesses sufficient strength to perform the function of jointing.

The following abstract discussion of jointing pertains only to integrated structure. The joints occur between and connect pre-fabricated and pre-finished members of solid and uniform consistency. The composition of the separate elements employed in the joint is not specified, but it is assumed that an existing material can be selected for each.

Matrices for the design of jointing have already been discussed in the analysis of cube grouping. Jointing cube groups, one module wide, are placed symmetrically with respect to the planes separating and common to adjacent members. Thus, in the marginal portions of each member is included a space assigned to the function of jointing.

The simplest method of jointing, but one that has a very limited application, is that of bonding with some suitable material such as glue, mortar, or solder. A joint of this type is shown in Fig. 44. The edges of the members are set back from the faces of their matrices by a clearance, c, to provide a space for the bonding material. The dimension of this clearance relative to the width of the joint matrix is usually small. The joint is designed entirely within this matrix, but the jointing cubes do not control its dimensions, as they will in other and more significant types of joints.

Types of joints having broad application to modular design generally employ separate parts or elements that function as the interconnecting means between structural members. But these elements must be designed with definite dimensions and locations within the structure. Consequently, the structure itself must include features of design that provide both the spaces for these elements and the means of locating them correctly. To distinguish between these two aspects of jointing, the separate elements are termed " interconnecting elements " and the reciprocal features of design in the structural members, required for accurate interfitting and fastening, are " connect-

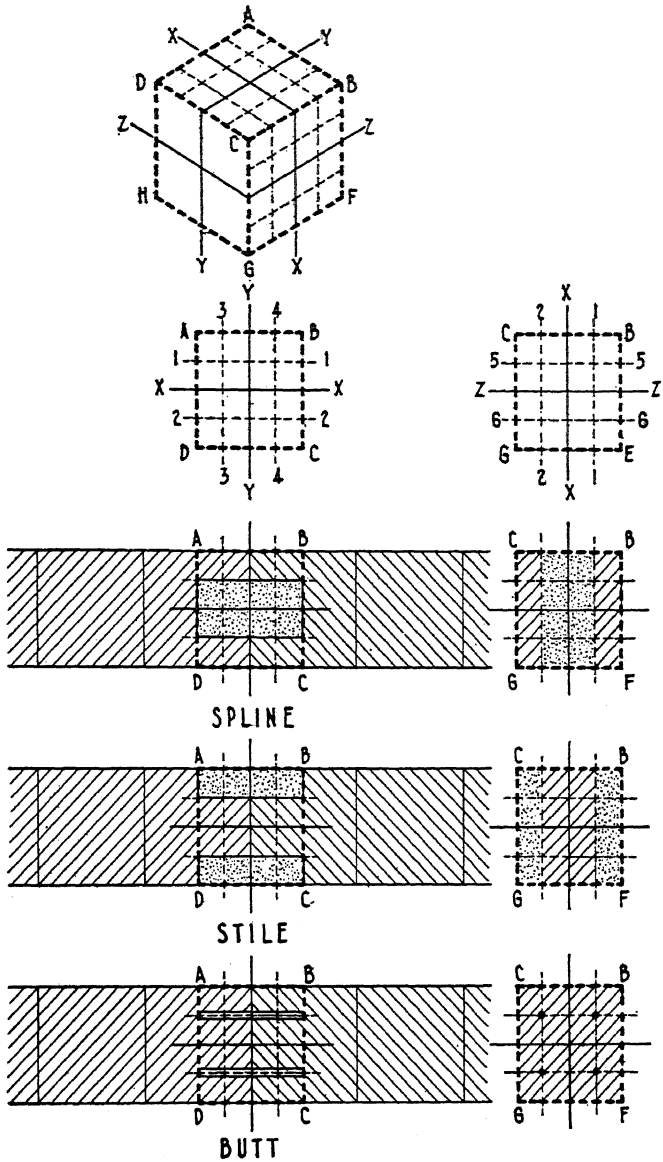

FIG. 45. THREE BASIC ARRANGEMENTS OF CONNECTION AND INTERCONNECTION

Above is an isometric view of a single jointing cube divided by the three principal axial planes XX, YY, and ZZ. Below are sectional views of the joint between two monolithic members, illustrating the three types of joints

ing means." In other words, the general function of jointing is divided into two subsidiary functions, those of connection and interconnection.

For the purpose of modular design it is useful to classify the types of joints according to the relative position in the structure of the connecting means and the interconnecting elements, and according to the direction along which, to assure definite location, the fastening is made. Where the interconnecting elements are placed inside the structure with the connecting means overlapping them on both sides, the joint is of the spline type. When the overlapping is reversed, with the connecting means inside and the interconnecting elements on the outer surfaces, the jointing is of the stile type. In both these types, the definite positioning and fastening of the interconnection elements occur in a direction parallel to the central plane of the joint. Where the structural members are attached or tied together face to face by some repetitive means such as dowels or bolts, the direction of fastening is at right angles to the central plane of the joint, and the jointing is of the butt type. It will be shown later that any two of these types, or even all three of them, may be included within a single joint.

At the top of Fig. 45 is shown a single jointing cube, with the traces of its axial planes on two faces of the cube indicated by solid lines. These planes divide the jointing cube into eight secondary cubes. The traces of the secondary axial planes are indicated on the same cube faces by dotted lines, and these are the boundaries of the tertiary cubes. The face ABCD is repeated in each of the joint cross-sections below, and the face CBFG is similarly repeated for the vertical sections that are shown at the right.

The different types of joints may be shown in abstract form by assigning the function of either connection or interconnection to the various tertiary cubes of the joint matrix and by designating the intersection of particular axial planes as the foci of fastening for positioning. For the spline, the small cubes included between the planes 1–1 and 2–2 are assigned to inter-

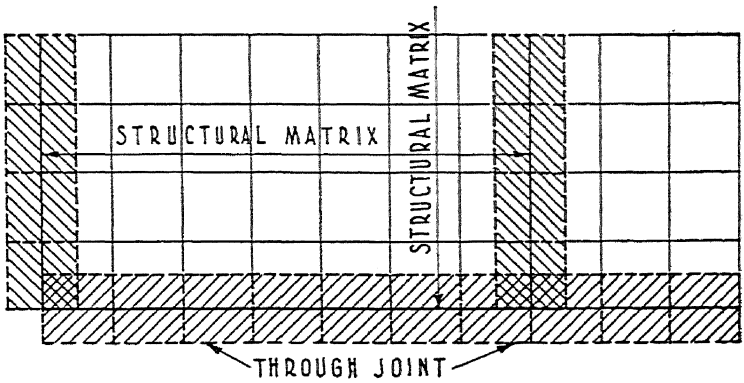

A B

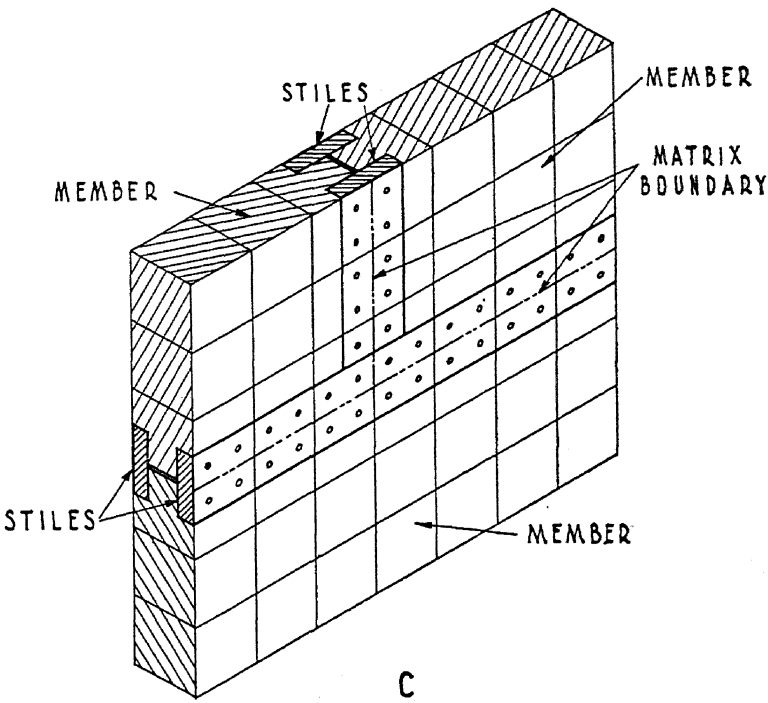

C

FIG. 46. JOINT INTERSECTIONS IN A SINGLE PLANE

A—Jointing cubes at the corner of a structural cube group
B—Jointing cubes at the intersection of two joints
C—Isometric view of joint intersection connecting three monolithic members

connection, and those lying outside these planes to connection. The intersection of the planes 3–3 and 5–5, 3–3 and 6–6, 4–4 and 5–5, 4–4 and 6–6 locate the four foci of fastening. The reversal of these functions, retaining the same foci of fastening, gives the stile joint. For the butt joint, the intersection of the planes 1–1 and 5–5, 1–1 and 6–6, 2–2 and 5–5, 2–2 and 6–6 are the foci, and the small cubes that surround these foci include the functions of both connection and interconnection. The details of the types of joints, spline, stile, and butt, are here shown in abstract dimensions, that is, in proportions derived directly from the modular cube. The spline and stiles shown are of the maximum width permitted by exact modular design, but their widths could be reduced, as they would still be within their matrices. Their thicknesses could be varied by combining the functions of connection and interconnection within certain of the tertiary jointing cubes. The location of the fastening foci is generally fixed as here shown, but it may occasionally be necessary to use the intersections of primary or tertiary axial planes instead of the secondary. The means of fastening, such as dowels or bolts, for any of the joints may be increased in cross-section to any suitable proportions, providing they are centered symmetrically on the foci.

Cube groups representing the structural members that form walls and floors in integrated constructions are normally rectangular and of uniform thickness. Jointing must be provided at all four edges, as usually each of these edges must be attached to some other member in the structure. At each of the four corners, therefore, where joint center planes meet at right angles, the joint matrices overlap as has been already explained. In Fig. 46, Drawing A indicates the extent to which the joint matrices overlap in the corner of a single structural cube group. Drawing B shows the entire overlapping at the junction of three interconnected members of the structure. The long horizontal matrix at the bottom of the drawing may represent the joint between a girt and two adjacent wall members above it. The joint between the girt and the wall members is continuous for

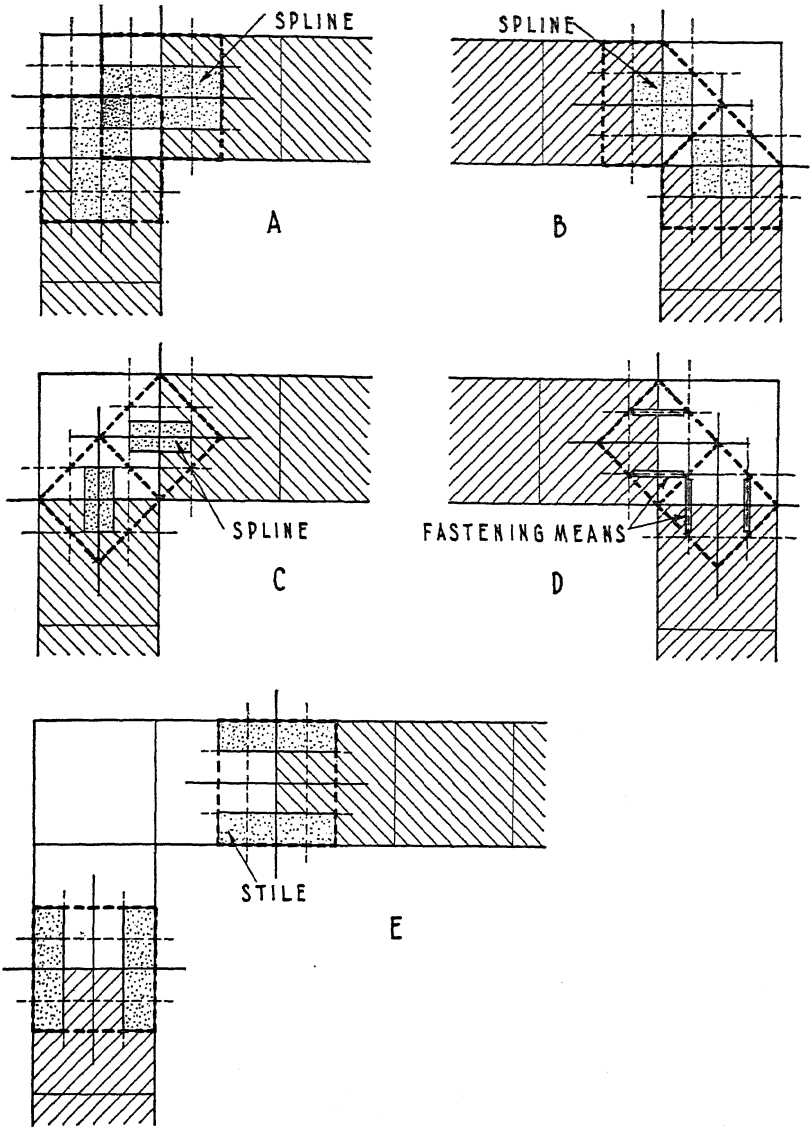

FIG. 47. VERTICAL JOINTS AT WALL INTERSECTIONS

A—Full-sized splines showing interference

B—Spline reduced to avoid interference but cutting post into two pieces

C—Spline further reduced to avoid cutting through post

D—Butt joints designed within the reduced matrices of C

E—Stile joints made possible by extending the post 1 M into each wall

All views are horizontal through a 2-way wall intersection. Posts are white, monolithic members hatched, and joint matrices indicated by dotted lines

successive wall members, and it is usually an advantage so to design such a continuous joint that its interconnecting elements do not have to be cut at points of intersection by the vertical joints. Hence it is usual to consider the secondary jointing cubes, where the overlapping occurs, as belonging only to the matrix of the through joint and to end the vertical joint matrix at the horizontal axial plane of the last jointing cube. This corner relation can be demonstrated best by the stile joint, in which the interconnecting elements are exposed to view, as in the isometric view of Drawing C. When both the joints that intersect continue past their intersection, that is, when the corners of four structural members come together at one point, either joint may be made continuous and the other discontinuous and abutting the first on both sides. This is the normal and practical method of dealing with the overlapping of joint matrices at corners.

The jointing shown in Fig. 45 is for structural members one module in thickness, and normally applies to wall members. For standardized structure, the details of intermediate joints between wall members must, in the jointing of walls to posts, be repeated at wall intersections. It is now necessary to determine how this can be done. The overlapping of jointing cube groups at posts has already been discussed. Drawing A of Fig. 47 is a horizontal section through a post matrix, and illustrates the overlapping that would occur at a two-way wall intersection with spline jointing. Obviously the splines interfere, and this arrangement is impossible. To avoid this interference it is necessary to divide the space of overlapping in the jointing cube into two parts and to assign one part to each of the joints. As the details of the two joints are the same, the space should be apportioned equally and symmetrically. Drawing B makes this division by taking the diagonal plane of the secondary cube as the axis of symmetry between the two joints. The ends of the splines where the interference occurred are cut off so that each is confined within its restricted matrix, defined by the diagonal planes. The two splines still touch at their corners, and cut the post into

two separate parts that could not serve either as connecting means or post member. Also, since the joint is always symmetrical about its center plane, its matrix must have the same symmetry. Drawing C shows the matrices of both joints reduced symmetrically by the diagonal planes, and the splines again reduced in size so that they no longer come together at their corners. Each spline is placed symmetrically within its restricted matrix. Drawing D shows butt joints designed within such restricted matrices at a two-way wall intersection. The length of the dowels must always be somewhat less than a half module. It is apparent in these drawings that similar joints can be located at either or both of the other two faces of the post, so that the statements made regarding two-way wall intersections apply equally to three-way and four-way intersections.

Such restricted matrices provide no space for jointing along the surfaces of structural members; consequently, they cannot be employed for the stile type of joint. A flat, standard stile can be used at wall intersections only by extending the post cube groups to form the special posts explained in the discussion of cube grouping. Drawing E of Fig. 47 shows a horizontal section through this type of post for a two-way wall intersection, with stiles used for jointing. As the joint matrices no longer overlap, the joints can be designed in the standard manner for any of the three types of joints.

To summarize the conditions for vertical wall joints, either the spline or the butt joint can be standardized with the normal square posts by reducing the joint matrices to the space within the diagonal planes of the secondary jointing cubes. The spline must be cut back somewhat from the matrix boundary to avoid cutting the post into separated portions. The stile joint can be used only with the extended type of posts.

In addition to vertical joints there usually are horizontal joints in a wall, where the wall members are attached to the girts. An analysis of jointing at the girt must include the connection to floors, because of the overlapping of the jointing matrices that occurs within the girt. The present abstract discussion en-

deavors to demonstrate the possibility of completely standardized jointing design throughout the structure and its essential limitations for various arrangements of cube grouping. When the attempt is made to apply to floors the joint designs that have been demonstrated for wall connections, it is apparent that the increased depth of the floor joints involves somewhat different relations in the jointing cubes. With double the number of jointing cubes there is also double the number of tertiary cubes among which the functions of connection and interconnection can be distributed. There is room for thicker splines and stiles, and for the butt joint a greater number of foci can be found if they are needed. The many variations that are possible in the abstract floor joint will not be discussed at present, as it must first be shown whether the sizes of splines and stiles and the foci for butt joints used for wall joints can be repeated through the girt and floor connections.

In Fig. 48 the vertical sections through the girt show in elevation the joints between girt and wall and between girt and floor members. In all three drawings an outside wall girt is shown with a floor member attached to one side only. From these it is easy to visualize the conditions at an interior girt with floors attached to each side of it. The relations would always be symmetrical about the vertical center line of the girt. In Drawing A, the matrices for the wall-to-girt joints must, to meet the requirements of standardized jointing, duplicate the matrices for the vertical joints at the post. Thus the overlapping of the joint matrices is again corrected by dividing the space at the diagonal planes. Completing the symmetry of the girt-to-floor matrix makes of its section a pointed, six-sided figure. Within this matrix is shown the spline of reduced size already adopted at wall joints. The space in the matrix is ample for a full-sized spline, as is demonstrated by the intermediate floor joint shown at the right. However, if floors were attached to both sides of the girt these full-sized splines would cut entirely through the girt and thus destroy its usefulness as connecting means. The stiles are shown in Drawing B with the girt extended one module

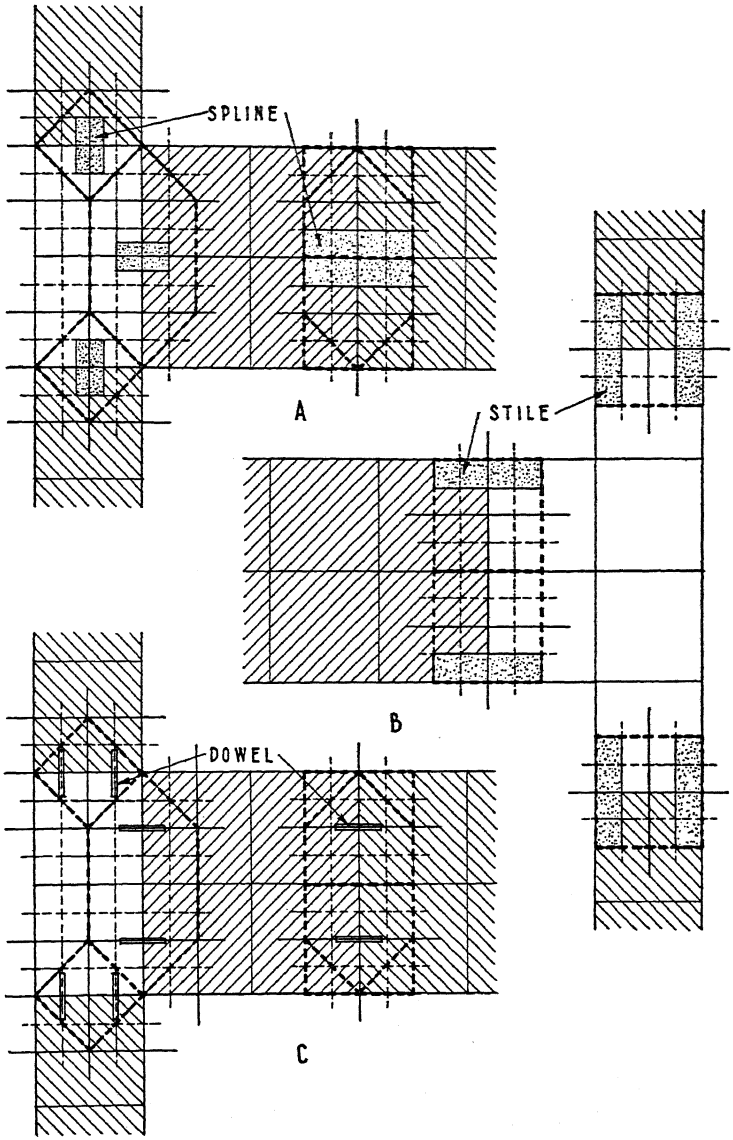

FIG. 48. HORIZONTAL JOINTS AT GIRTS

A—Joints at girt with reduced spline of Fig. 47-C. A full-sized spline is shown in an intermediate floor joint at the right

B—Stiles used at girt joints by extending girt 1M into walls and floor

C—Butt joint at girt and at intermediate floor joint

All views are vertical sections through an outside wall. Girts are white, monolithic members hatched, and joint matrices indicated by dotted lines

in the direction of the floor. The stile could not be used with the restricted joint matrix, which affords no surface space. The full normal width of stile is repeated without difficulty, just as formerly with the extended form of post. Drawing C shows the butt joint placed within the restricted joint matrices. Within the floor joint matrix the intersections of any of the axial planes of the jointing cubes can be taken as foci, provided the rule of symmetry is observed. Thus all the designs that were developed for vertical wall joints have been repeated at the horizontal joints attaching walls and floors to girts, and floor member to floor member.

All the basic jointing conditions that occur in integrated structure have now been discussed, with the exception of the joints between posts and girts, the main framing members. These joints will be examined in a later Case dealing with framing. With the single exception of joints between posts and girts, general conclusions regarding standardized jointing for integrated structure can now be made. With special forms of posts and girts any type of jointing can be adopted as standard and repeated throughout the structure. With normal rectangular posts and girts a stile cannot be used, but a spline of reduced size or a butt joint with the fastening means reduced in length can be made standard.

The function of jointing has been considered as that of connecting and positioning the various members of the construction. Design for actual structure must also take into consideration certain subsidiary functions of jointing, such as the transference of load in the structure, finish, protection from weather, and ease of erection. In some joints, load transference may be of minor importance, while in others it may be a deciding factor and require careful consideration of the direction in which the load is transferred, whether horizontally or vertically. As joints are partly visible on the surface of the building, they must be considered as finish in that they affect appearance. Joints on the exterior must be water-tight and, as nearly as possible, air-tight. The ease of erection depends, to a considerable extent, on the

character of the jointing, and the order of erection must be considered in the selection of jointing. Although these practical considerations may demand more than one type of joint in a single building, one standard is required for each group of joints of similar function.

The grouping of joints according to similar function may not be precisely the same for all types of construction, but a logical grouping for integrated structure may be indicated. Vertical wall joints must serve as weather protection and provide suitable finish appearance. In them load transference is relatively unimportant. The horizontal wall joints between walls and girts must transfer the load vertically and must afford a convenient means of placing and positioning the wall members along the girt. Joints between floor members and between floors and girts must transfer load horizontally and provide some distribution of concentrated loads. These three groups of joints are illustrated in Fig. 49, with one standard joint detail for each group. The types of jointing are so selected as to be apparently consistent with the general functions of each group, but this assortment, although illustrative of the abstract principle of selection of standards by joint groups, must not be considered as rigidly prescribed for all integrated structure.

The possibility of combining any of the three types of joints has already been mentioned. The three possible combinations of them in pairs and the inclusion of all three types in one joint are shown in Drawings A, B, C, and D of Fig. 50. These are all shown in floor joints where there are a larger number of tertiary jointing cubes to rearrange.

The discussion of jointing would be incomplete without the inclusion of aligners among the types of interconnecting elements. The form of aligner here considered is a part interposed at the joint and extending completely through the structural wall thickness. Its shape may be such as to include any of the types of joints already described. In Drawing E an aligner is shown, shaped so as to include in it a portion that serves as a stile. An aligner with a central spline portion is shown in Draw-

ing F. Many more drawings could be made of other arrangements of joint details. The thickness of the interconnection elements can be varied. Two or more splines can be used in a single joint and more than two foci can be found for a single butt joint. The illustration is sufficient to indicate the large

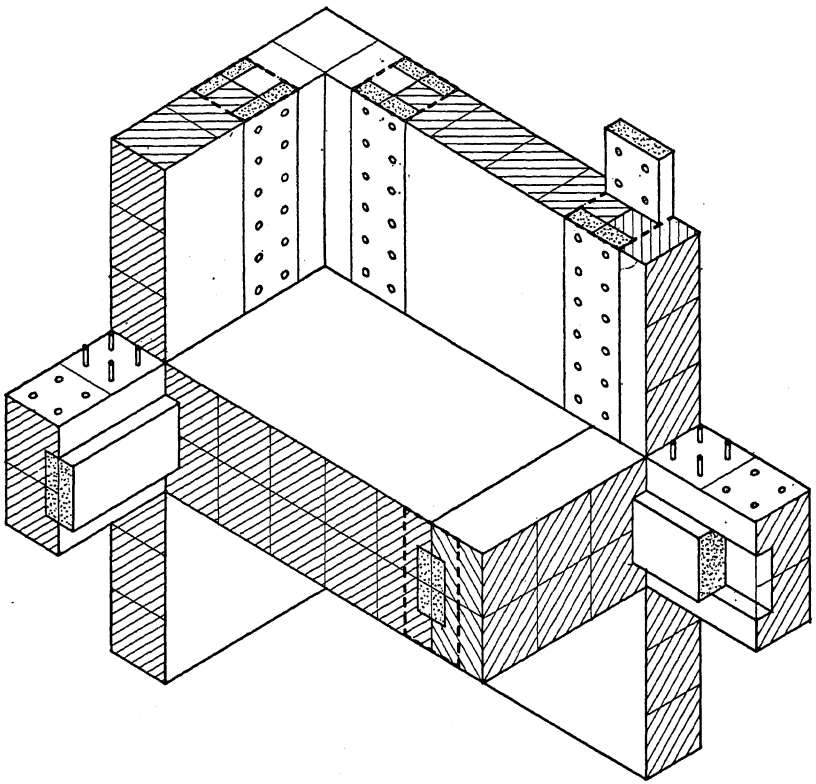

FIG. 49. THREE TYPES OF JOINTS IN A SINGLE STRUCTURE
A single standard of stile for vertical wall joints, a single standard of butt joint between walls and girts, and a single standard of spline for floor joints

number of combinations that are possible, and no useful purpose would be served in listing and numbering them all.

This Case is an abstract discussion of dimensioned jointing for integrated structure. It is of fundamental importance to modular design, because modular jointing provides for the accurate location of each structural part and determines the

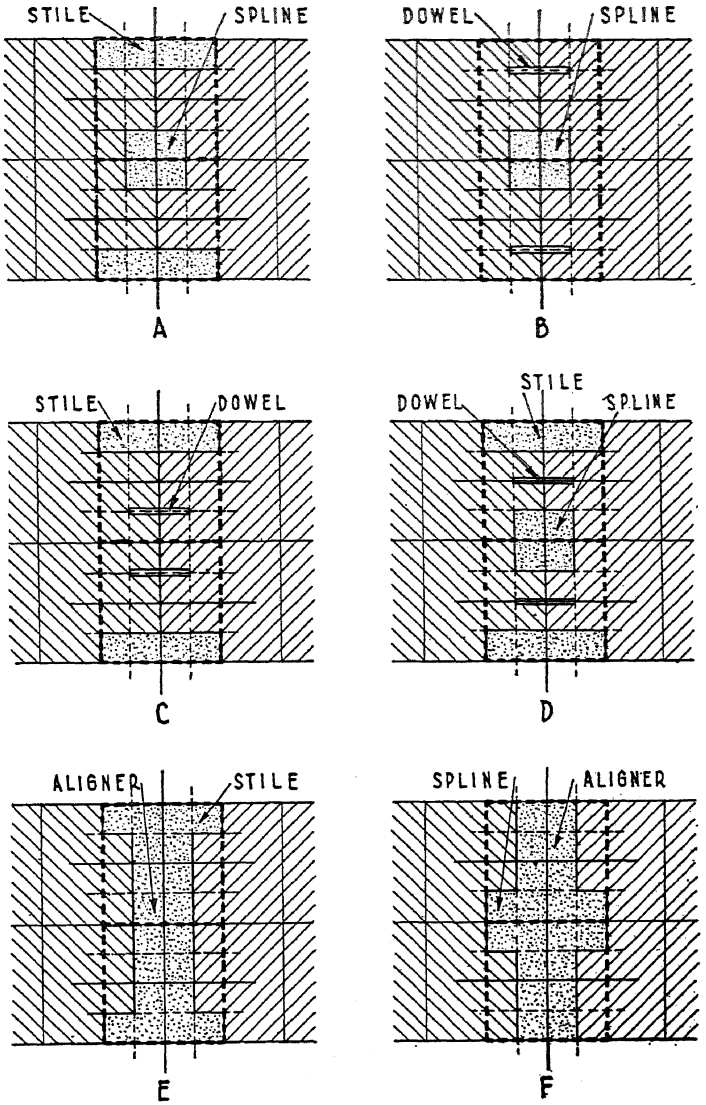

FIG. 50. COMBINATIONS OF THE THREE TYPES OF JOINTS AND ALIGNERS

A—Spline and stile combined
B—Spline and butt combined
C—Stile and butt combined
D—Spline, stile, and butt combined
E—Aligner combined with stile
F—Aligner combined with spline

All views are vertical sections through floor joints, the dotted lines indicating joint matrices

design of its marginal portions. By standardized jointing, modularly disposed through the overlapping of interconnection elements and structural parts, the transfer of modularity throughout the structure and the standardized design of members are made possible.

Case III

With the function of jointing developed in abstract terms, it is now in order to consider some of the general functions that must be fulfilled by structural members. It will still be assumed that these members are fully integrated, except that they require separate means for interconnection. Within each member is found the means of providing the necessary strength, durability, finish, and heat insulation that are required of the house, and no supplementary parts need be added outside the structure. In other words, the complete structure of the house will still be designed within structural matrices.

In proceeding to develop for structural members an abstract design that will satisfy all the essential functions, some consideration must be given to the properties of available building materials. A uniform and ideal building substance will no longer be assumed. The broad characteristics of various types of materials must be taken into account and an appropriate position assigned to them within each member.

It is not desired at this point to limit the principles of design to specific materials, but rather to consider available materials according to their general properties and uses in structure. On this basis they may be grouped into three general types. First there is a group that has wood as its principal representative, but also includes pressed materials such as fiberboard, wood fabricated into various forms such as plywood, and any fibrous material that can be formed mechanically into boards that are comparatively light and readily cut to desired size. These materials all have considerable structural strength if used in sizes of substantial cross-section. They are relatively light, and are heat insulators rather than heat conductors. A second group

includes materials that are at some stage plastic or readily molded or cast, such as cement, concrete, gypsum products, and the synthetic plastics. These materials have some structural strength if they are used in sufficiently large masses. They may be used either in pre-cast form or poured into place in the structure. They are relatively heavy and moderately good conductors of heat. A third group consists of the metals, all of which are relatively heavy, strong, difficult to cut and shape, and highly conductive of heat.

None of these materials would necessarily be formed into solid, homogeneous structural members. Practical considerations, such as weight, economy, expansion and contraction, insulation, and manufacturing difficulties, would frequently call for particular shapes and the use of different materials in combination.

Consequently, it is now necessary to provide for the modular design of composite members built up of separate and distinct elements. The members must be designed within the cube-group matrices already developed for this purpose. Drawing A of Fig. 51 shows a section through such a matrix. At either end the cubes are divided in half, the outer or marginal portions being available for the design of connecting means and interconnecting elements as set forth in the preceding Case. The trace of the central plane of the member is shown dividing the matrix into two equal slices. Within this type of matrix composite wall members must be designed.

By extending the principal planes of the secondary jointing cubes employed for the locating of the jointing elements, the structural matrix is divided symmetrically into parts that may be designated as core and surface portions, as shown in Drawing B. This division provides a basis for locating the elements of the member according to their broad functions. Finish and durability must be provided for within the surface portions, while within the core a means of connection between these two surfaces must be found, and usually, also, the properties of strength and heat insulation. In Cross-section C the entire core is built in

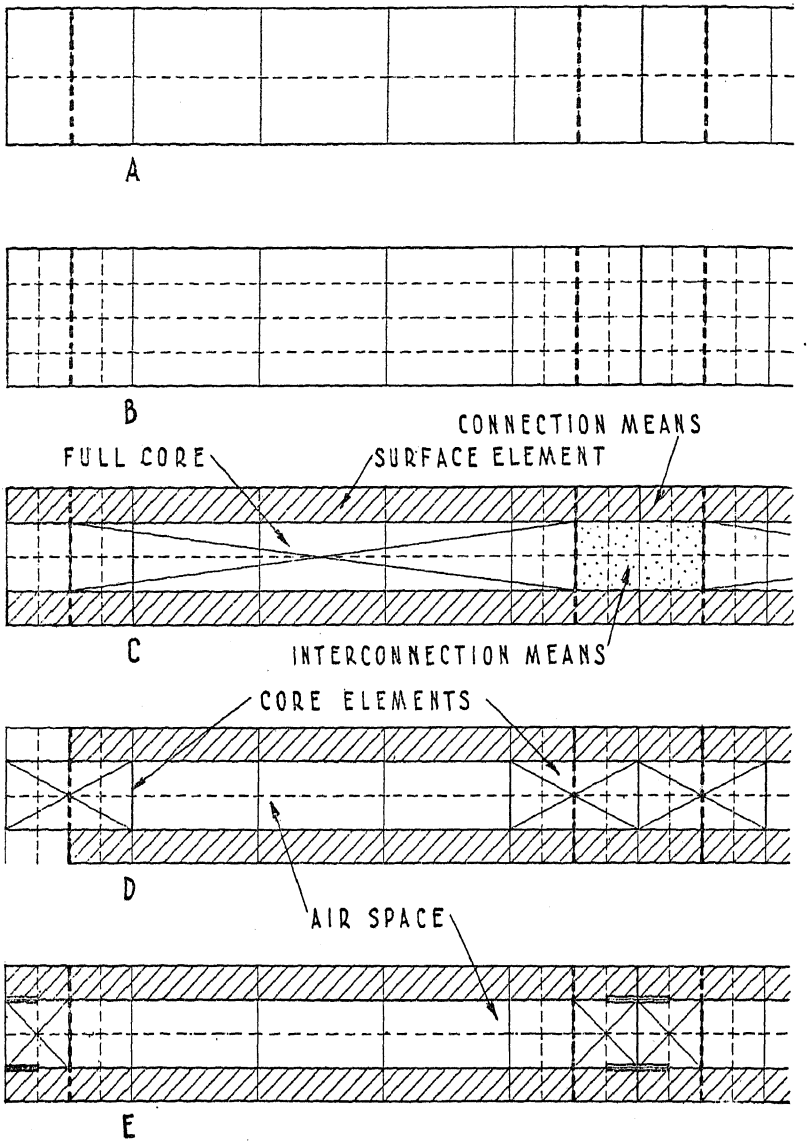

FIG. 51. A COMPOSITE MEMBER BUILT UP OF SURFACE AND CORE ELEMENTS

A—The matrix of a member showing division of marginal space for jointing
B—The matrix of a member further divided into surface and core spaces
C—Composite member with solid core and spline jointing
D—Composite member with core frame and stile jointing
E—Composite member with core frame and butt jointing

solidly so that it may provide both strength and grounds for the surface elements attached to either face of it. At the edges of the member there is a coincidence of these functions with those of connection and interconnection. The edge of the core is cut back to provide space for interconnecting elements, and the margins of the surface elements overlap to provide the necessary connection. In Section D the core is filled only near the edges of the member with elements of rectangular cross-section that could serve both for strengthening and for the attachment of the surface panels. The core between these elements is empty and affords an air space that may be useful for heat insulation. The surface elements are cut back at their edges to provide space for interconnecting elements of the stile type. Here the functions of finish performed by the panel elements must also be found on the interconnecting elements, and there is again a coincidence of function. Section E shows the same arrangement of elements in the core of the member, except that with the butt type of joint the foci of jointing penetrate between the core and surface elements and the surface elements extend the full width of the matrix.

The composite members shown in Fig. 51 are built up of core elements and surface elements. In C the core is filled with a solid block of material, while in D and E smaller pieces of rectangular cross-section are placed near the margins of the member and can be disposed at additional points in between as they may be required for strengthening and for the support of the surface elements. No particular type of building material has yet been assigned to these elements, but the proportions are perhaps best suited to some material of the wood group. In actual design the dimensions would probably differ somewhat from these shown, which are of the nature of abstract sizes derived directly from the modular cube. Wood and similar materials are usually designed in thicknesses large enough to bear a definite relationship to the module. On the other hand, it is not generally necessary to employ wood solidly for structural members of integrated constructions, and composite units such as those shown are the logical method of design.

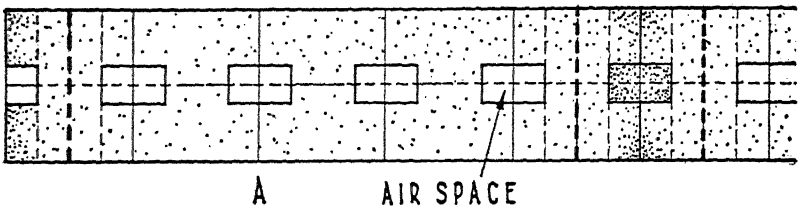

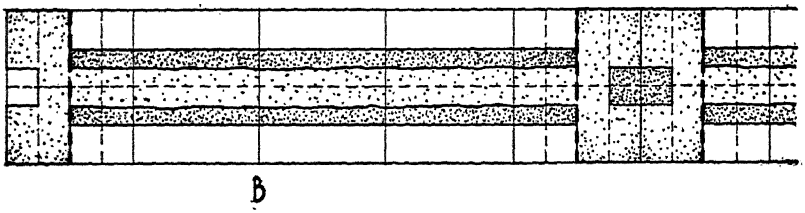

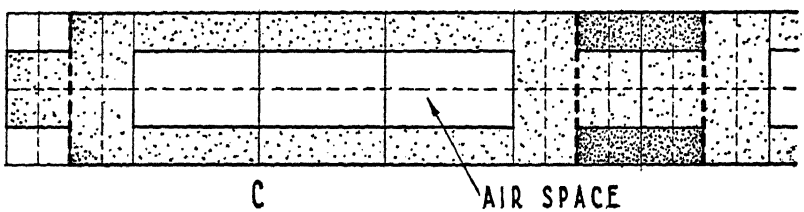

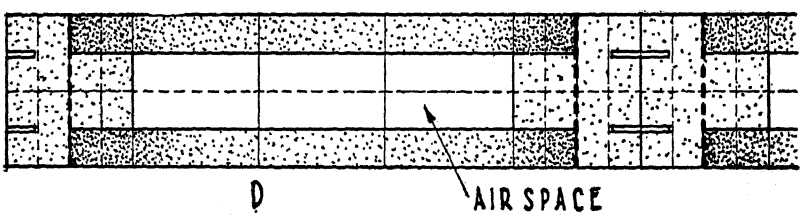

FIG. 52. COMPOSITE MEMBERS OF CAST MATERIAL

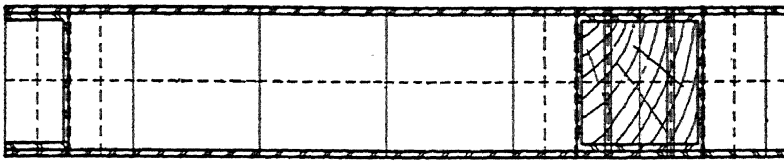

A

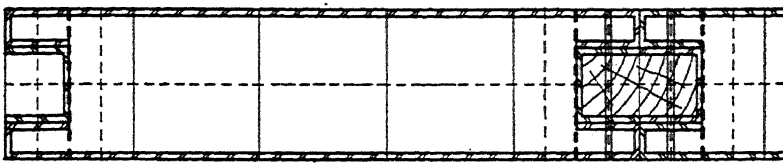

B

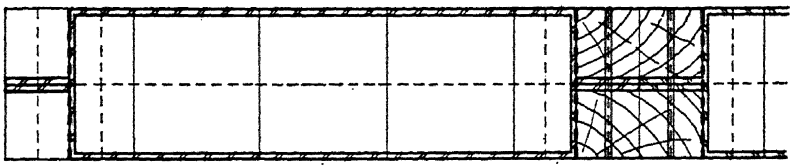

C

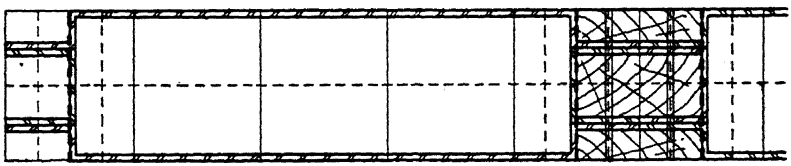

D

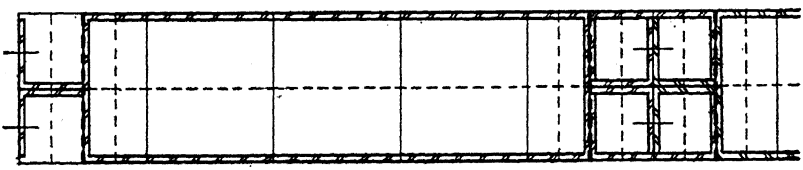

E

FIG. 58. COMPOSITE MEMBERS OF SHEET METAL

Members made of the cast materials such as concrete are generally of more substantial proportions, particularly in thickness. Fig. 52 shows in section some typical proportions for members of these materials. They are frequently cast with cores at their centers to provide air spaces and thereby improve their heat-insulation properties, as illustrated in Drawings A and C. Other shapes may be employed to give special finish effects, such as the ribbing of Drawing B. Another possible shape is shown in Drawing C, where surface elements are set into core elements at the margins. In all these designs the material in the cross-section is sufficient to provide adequate structural strength.

The heavy weight and high structural strength of most metals indicate that they may be used economically in relatively thin pieces or sections. Frequently the thickness is so slight as to have no significant comparison with the module. For example, surface elements made of metals will usually be much less than ¼ or ⅛ of the module in thickness, so that the simple relation to the abstract cube of Fig. 51 is impracticable. Elements designed of metal that are placed inside the members to strengthen them or to form a connection between the two surfaces will not usually have a solid rectangular cross-section, but will preferably consist of relatively thin layers of the metal, formed into shapes that provide convenient attaching means and adequate strength and rigidity. Fig. 53 illustrates a number of possible sections of members made entirely of thin sheets of metal. The marginal portions are shaped to provide any type of jointing. On account of the thinness of the metal sheets, the surface elements may occupy but a small portion of the space assigned to surface functions in Fig. 52, and the core elements placed at the margins for stiffening and for the attachment of the surface elements then extend to the surface elements, as shown in Section A of Fig. 53. The core elements here are channel-shaped, with the opening toward the joint to provide space for a thick spline. The width of the marginal channels may be reduced by bending the surface elements inward at the edges

of the member, as in Section B, and the space for the spline is correspondingly reduced. In Section C, the surface elements are bent in to meet on the central plane of the member so as to provide space for thick stiles. Section D combines a spline of the same size as B with stiles of reduced thickness and with the same marginal channel as in B. Section E shows the surface elements bent to meet on the central plane, and then bent outward again to provide flanges by which adjoining members may be bolted together to form a butt joint. A flush surface at the joint may be retained by filling the joint recesses with channel-shaped stiles that serve primarily as finish. The above examples of sections of composite members formed of metal indicate the wide variety of design that is available.

Inasmuch as no one type of material is completely satisfactory in all respects, it may be desirable to employ in a composite member of fully integrated construction more than one material. Fig. 54 shows sections of composite members that combine various materials in different ways. The dimensions and arrangements of the elements within the members must still be considered as essentially abstract because no attempt has been made to calculate the exact properties of specific materials or to arrange them according to these properties. For example, such practical considerations as expansion and contraction due to heat and moisture changes, the accuracy of practical fabrication, or the shapes adapted to the processes of manufacture — none of these practical matters has been taken into account. The figure illustrates that within the methods of modular design different types of materials can be included within a single composite member. All the designs shown remain symmetrical in cross-section and include the provision for simple jointing means.

A closer examination of the functional requirements of structure reveals that many of these functions do not occur symmetrically about the principal axes of the members. A wall member, when part of an outside wall, must be weatherproof on one surface while on the other surface an interior finish is required.

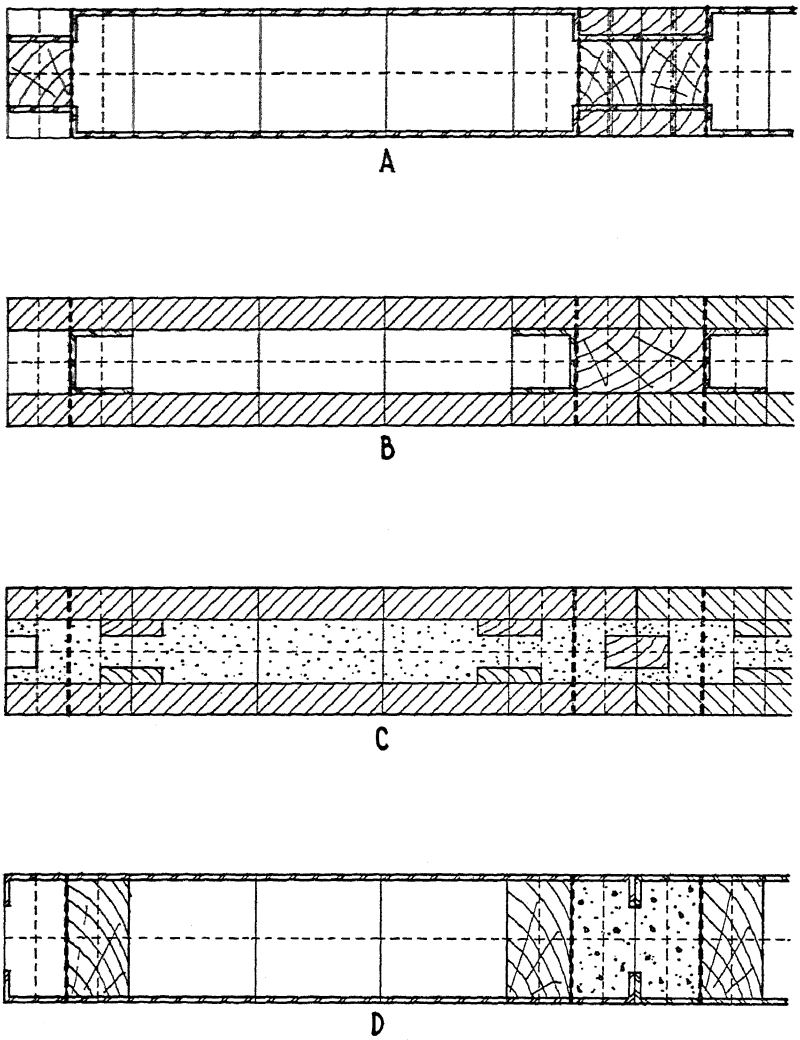

FIG. 54. COMPOSITE MEMBERS COMBINING DIFFERENT MATERIALS

A floor member requires finish flooring on top and ceiling finish underneath. The upper edge of a floor joint is under compression, while its lower edge is in tension. Therefore the joint may not be symmetrical about the central plane of the structure, although it still must be symmetrical about the central plane of the joint. A method of design that required uniform symmetry in all the details of design would scarcely meet practical conditions.

It is possible to design composite members that, as regards outline, will be practically symmetrical about each of their axes, and yet include an unsymmetrical arrangement of elements that fulfill their particular functions in the structure. This possibility is illustrated by a few typical cross-sections in Fig. 55. Lack of symmetry is evident, particularly in the dimensions of the surface elements, and these dimensions may in turn place the core elements unsymmetrically within the unit. In Section A, the surface elements are of different materials — for instance, metal and a cementitious material — and of different thicknesses, one being outside and the other inside finish; but the total thickness of the member is still one module. The spline, used as an interconnecting element, is centered exactly in the composite member. The grooves for the spline in the core elements of the member are not located symmetrically in these elements because the elements themselves have been thrown off center by the unsymmetrical thickness of the finish. In Section B the strength of the member is furnished by the marginal metal channels, while the finish outside these channels is thin sheet metal on one side and a layer of wood or similar material on the other. Jointing is furnished by stiles placed on each joint surface. To provide flush surfaces, the thicknesses of the stiles correspond to the thicknesses of the finish elements. Section C illustrates a member 2 M in thickness which might be a member in a floor. The top element of this member would serve as floor finish, the under side as ceiling. Because of their different functions, these two elements differ in thickness. The marginal channel members, formed of thin metal, provide structural strength, the

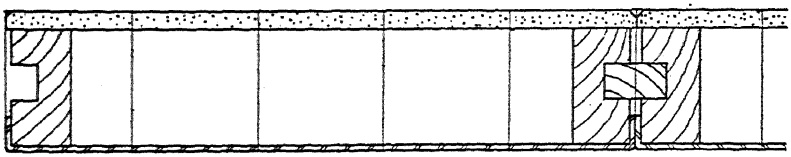

A

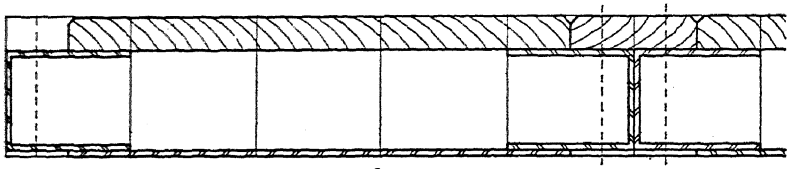

B

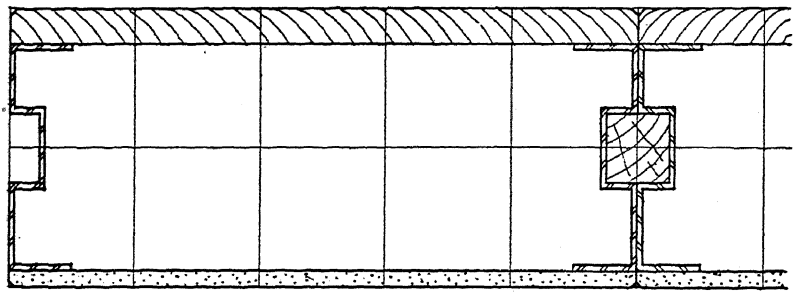

C

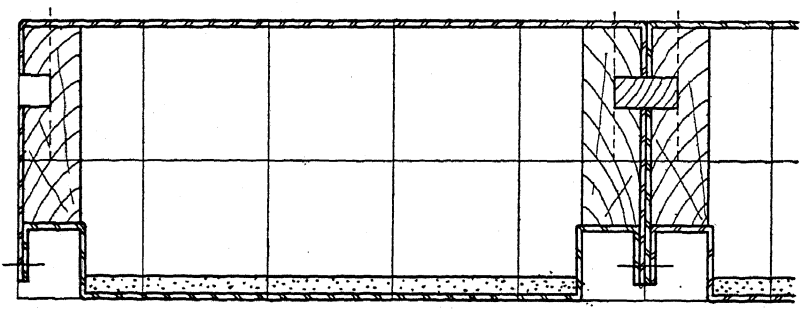

D

FIG. 55. COMPOSITE MEMBERS OF UNSYMMETRICAL DESIGN

means for attaching the finish elements, and a groove for a spline. The spline is centered within the member, but the spline groove is off center in the channel element. Section D represents another design for a floor member, a possible combination of jointing where the jointing requirements are dissimilar at the upper and lower surfaces. At the top, a spline of any suitable thickness is used; underneath, the edges of the surface element are bent to form flanges through which the members are bolted together so as to constitute a butt joint. This drawing also illustrates a member in which a portion of one face is set back from its matrix. The structural surface would have a ribbed effect. An almost unlimited variety of shapes and combinations could be drawn to illustrate this principle of unsymmetrical combination.

In addition to the three groups of structural building materials that have already been discussed, there is another type of material that can be used in structural design for one purpose only, that of insulation. The most efficient heat insulators are of such low density as to provide little or no strength for structural purposes. Some of them are formed in blocks of definite dimension; others are built into quilts that can be stuffed into empty spaces without cutting to exact size; still others are loose and of such constituency that they can be poured or blown into empty spaces. None of these insulators provides a practical finish surface. Fig. 56 suggests some of the methods of using these materials. In Section A the insulation is in the block form and is held in position in the core of the member by suitable ground blocks placed inside the metal channels. In this arrangement it would be difficult to design the elements so that the thicknesses of the insulation and the finish elements would be either ¼ M or ⅛ M. The requirements of modular design are met sufficiently if the sum of the thicknesses of the two finish elements, the two ground blocks, and the insulation is equal to 1 module. In Section B, a sheet of metal is placed at the central plane of the member. The finish elements are blocked out from the metal plate so as to provide separate spaces for insulation on either

side of it. These spaces are filled with insulating material in the loose form. Section C shows a member in which strength is provided by an element of wood or similar material of an unsymmetrical U-shaped cross-section. Finish is provided on one surface by thin metal, and on the other side the indentations are filled with surface elements that are blocked out sufficiently to provide a comparatively thin interior air space. This air space is itself useful in providing heat insulation, and it is possible, though not usually necessary, to fill it with an insulating material. Section D indicates the method of applying insulation in the blanket form. The insulation does not fill the space available in the member. This drawing also illustrates a member with one face set back from its matrix, except for a small portion at the margins.

This Case has demonstrated the general method of building up composite structural members from elements. The elements may be of materials of differing physical characteristics. The shapes and sizes of the elements will vary in their practical design according to each specific material, and in general the proportions will depend on the type of material used. Also, within a composite structural member the normal foci of the structural cubes are available for the connection of the various elements. In the illustrations the elements are so positioned, relative to the structural cubes, that the foci can locate suitable fastening elements, but the practical details of these connections concern applied rather than theoretical design, and are not included in this chapter.

So far only fully integrated construction has been considered; all the requirements of house structure must be found within the composite members or their matrices. The general requirements of strength and finish are provided for within the members, as well as the means for jointing. The possibility of designing composite members that will provide heat insulation has also been demonstrated, involving the use of a type of material that has heat-insulating properties only.

The fundamental conception of designing the members of the

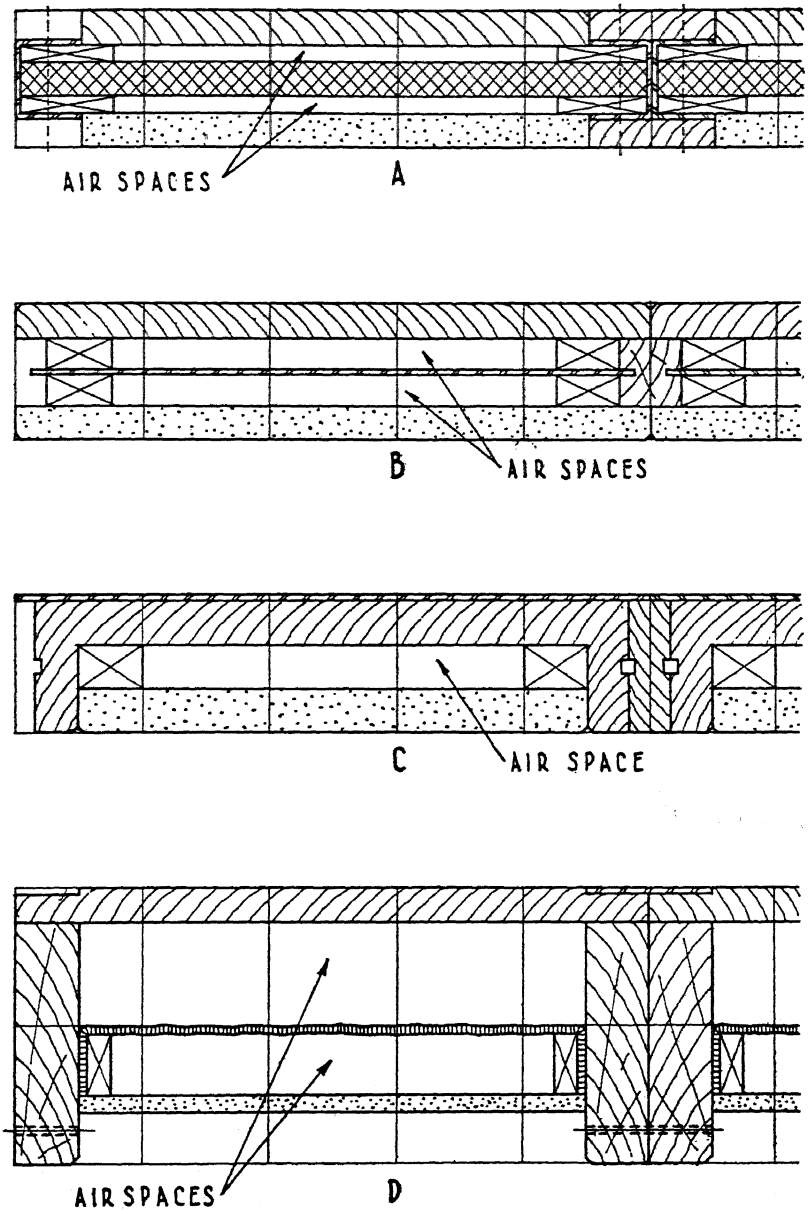

FIG. 56 COMPOSITE MEMBERS THAT INCLUDE HEAT INSULATION

structure within a cube group as a matrix has been applied in abstract form. In Case I the faces of the members and their matrices coincided throughout. In Case II, the marginal portions of members were set back from their matrices to provide for jointing. The present Case has shown instances where portions of a surface of the structure are also set back from its matrix. This flexibility may be required to meet the practical requirements of design, and a suitable provision in the method of modular design is called for. Since it is impractical to require that each face of a member coincide with its matrix, a member may be said to fill its matrix when some portion of the member or of the interconnecting elements lies on and thus defines each face of its matrix. This provision in no way interferes with the jointing or the modular interfitting of parts, and is adequate to meet the requirements of practical design.

Throughout this Case very little mention has been made of clearances, as this is a practical detail that will be discussed in the following chapter. However, it is necessary to note here that clearances will be taken care of and that a portion of a member still defines the face of its matrix even if it is set back by a small amount to satisfy practical conditions.

In concluding this Case, it is useful to summarize the principles of modular design within a matrix as they have so far been developed.

(a) A structural member is always designed entirely within its matrix. Normal interconnecting elements are designed entirely within the jointing cube groups.

(b) Structural members are always symmetrical about the principal planes that are transverse to the plane of the structure; that is, the details of design are always the same in the opposite marginal portions of each member. Symmetry about the principal plane that lies within the structure will often have to be sacrificed in order to satisfy unsymmetrical functional requirements.

(c) The elements of which composite units are formed are not necessarily modular in their own dimensions, but each di-

mension is such that when added to the dimensions of other elements, the composite unit will satisfy the rules of modular design. Hence the dimensions and position of each element have a defined relation to the modular matrix, a fixed modularity.

(d) A unit of integrated structure normally will fill its matrix; that is, some portion of the unit including the interconnection element will lie on and thus define each face of the matrix. In practical design this rule may have to be modified in the following respects:

(1) The portion of a member that defines a matrix face may have to be set back from the matrix by a small clearance. Clearances for masonry joints are of this class.

(2) If interconnection elements are of the form of separate aligners, the face of the matrix at the plane of the joint may be defined by the center plane of the aligner.

Case IV

So far, these Cases have dealt only with fully integrated structure. Except where an ideal and purely imaginary building material was supposed, the parts of the structure consisted of composite members and separate interconnecting elements which, when connected into a unified structure, fulfilled all the requirements of a house. All these parts were designed entirely within the matrices provided by cube groups.

The present Case proceeds with the differentiation of structure. It demonstrates the design of parts placed outside the structural cube groups, and it provides for the design of structure consisting of surface and framing elements separately erected. Partially integrated frameless masonry constructions will be discussed in the following Case.

Even with fully integrated structure, it is sometimes necessary to include in its design certain jointing features that extend beyond the original cube-group matrices. This necessity may arise in the design of jointing where some or all interconnection elements are placed outside the structure, or where portions of the structural members that function as means of

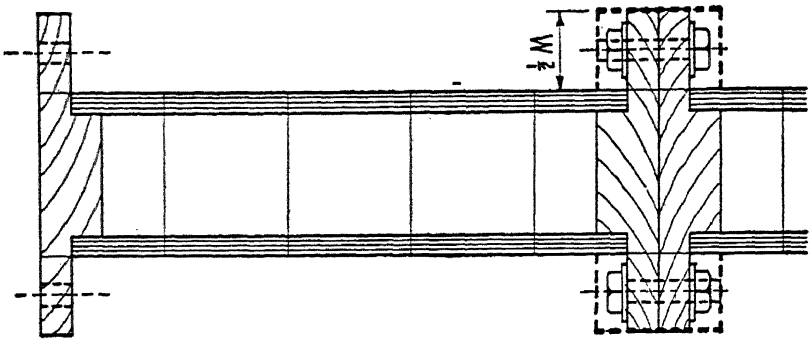

A

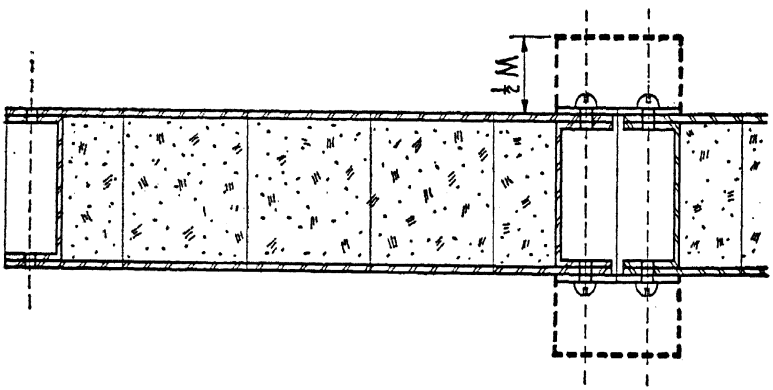

B

FIG. 57. JOINTING EXTENDED OUTSIDE THE STRUCTURAL MATRIX

A—Butt joint

B—Stile joint

Dotted lines indicate extended joint matrices

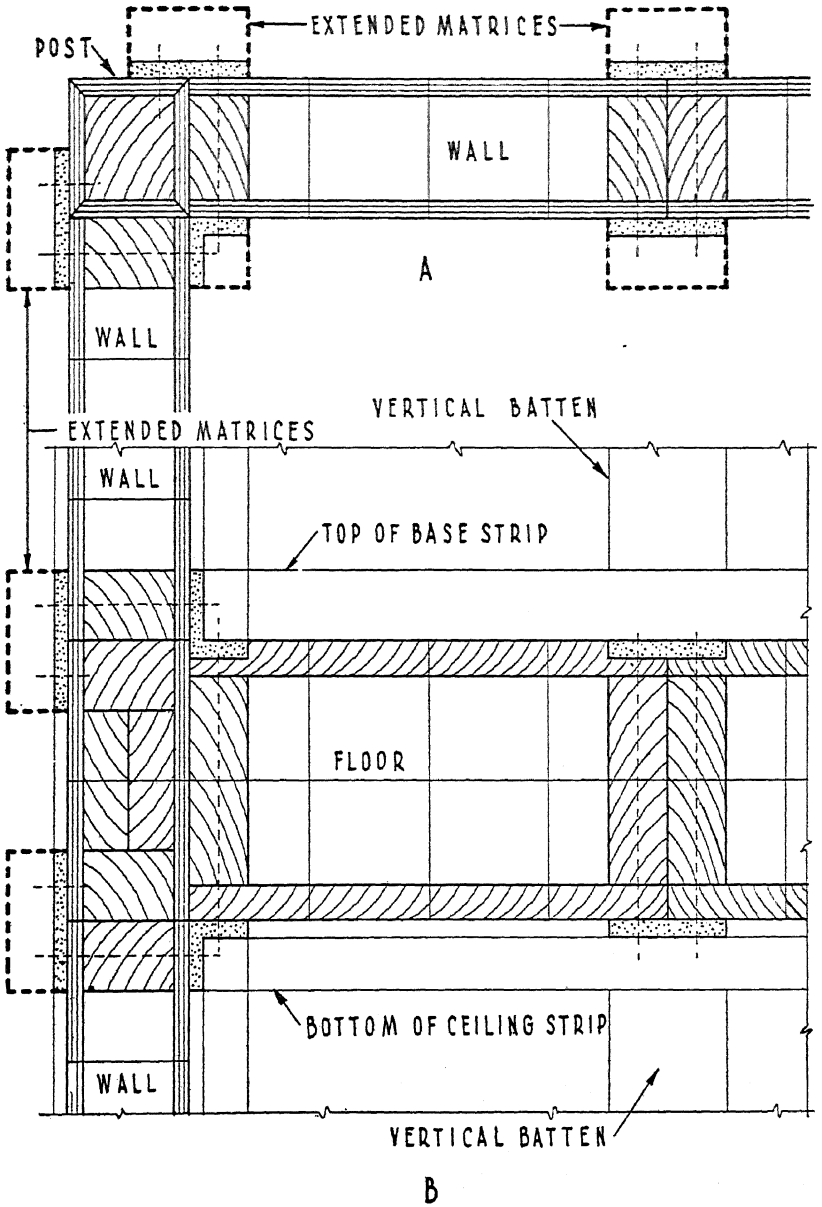

FIG. 58. SPECIAL INTERCONNECTING ELEMENTS AT CORNERS

A—Horizontal section showing 2-way wall intersection and intermediate wall joint

B—Vertical section showing joints at girt and intermediate floor joint

connection extend beyond their original matrix. In order to provide a matrix that will be adequate for the design of jointing of this type, it is convenient to consider the jointing matrix as extending out beyond the surfaces of the structure a half module on either side. The extended joint matrix then becomes two modules in total thickness across the structure, where the normal wall thickness is a single module. The principal planes of the secondary cubes will also be extended, so that foci for attachment can readily be found lying outside the normal structure.

Fig. 57 illustrates in horizontal sections through wall members two types of jointing where the extended joint matrix may be useful. In Drawing A, the projection of the marginal framing elements makes available foci of fastening that are suitable for a butt joint placed outside the structure. Where a projecting joint of this type is employed, the features must, to prevent interference at wall intersections, be designed within the joint matrix extended a half module beyond the structure, and extended posts are usually required. Drawing B of this illustration shows a stile placed outside the structure. The foci for fastening and the limitation as to the width of the stile remain the same as in the preceding Case. Even though the stile is set into the member so as to lie entirely within the structure, the means of fastening may project from the surface of the structure and thus require the joint to be classified as one in which elements extend outside the original matrix.

At wall intersections occurs another application in integrated structure of jointing means placed outside the structural matrix. In Case II the advantage of uniform standard jointing was emphasized, with the sacrifice of standardized posts and girts. A different compromise can now be shown that permits one standard post, square in cross-section but with a special interconnecting means placed outside the structure at concave wall corners. This possibility is illustrated in Fig. 58, Drawing A, where composite wall members, shown in horizontal section, are jointed by stiles or battens placed outside the structure. At the

concave corners, the stile becomes an angle, while at the convex corners two standard flat stiles are used. Thus with a single special angle for interconnecting means at all concave corners, the single shape of post can be retained. The three-way wall intersection requires two of these angles with two flat stiles, and the four-way intersection is completed with four angles for interconnecting elements. The foci of fastening for the angles are located by the extensions of the usual axial planes in the jointing cubes, and the width of the angle flanges is controlled by the surface planes of the joint matrices, as extended out from the structure. Similar interconnection elements may be used for the joints of floors and walls to girts. Drawing B shows a vertical section of this jointing with the stiles set into the floors to offer a flush floor surface. For the ceiling the flush surface may not be required. In the illustration, the angle used for interconnection between the wall and floor is of different dimension from that shown at concave wall corners. In actual design it may be found preferable to increase the number of standards for the interconnection elements by these special angles at corners, rather than to adopt the special forms of posts or girts.

The distinction between integrated and differentiated structure is that in the former the elements that are required for strength and those that provide surface and finish are assembled into a single composite member, while in the latter the framing or aligning elements are erected and the surface parts are then applied separately. There are two distinct ways of viewing the aligning or subsidiary framing members. They usually supply essential strength and at the same time provide the means for attaching and assembling the supplementary parts. As was indicated in the discussion of cube-group arrangements, it is usually preferable to consider the supplementary framing members as interconnection elements and to design them within the normal jointing matrices in order to place them where they are required for the support of the edges of the parts placed on the framing. Since a jointing cube group may be centered on any of the planes within the structural cube

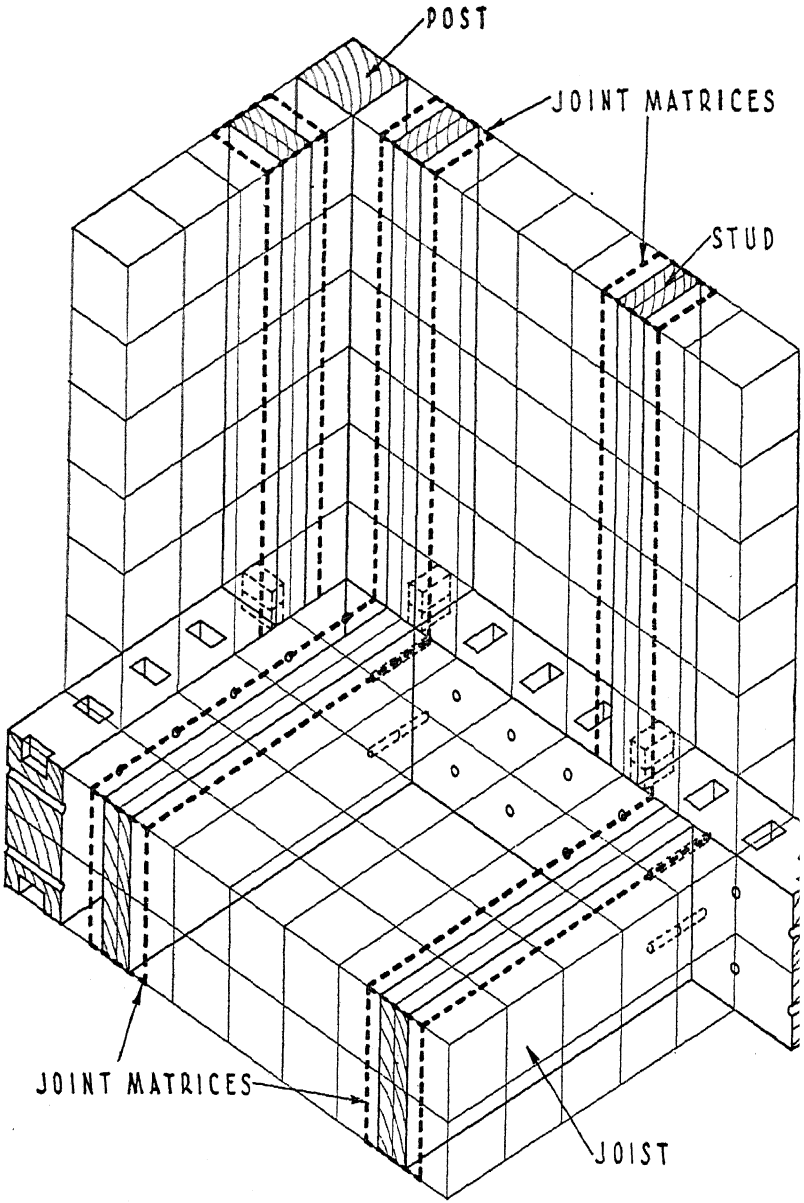

FIG. 59. WOOD-FRAME ASSEMBLY
Connection features repeated only on girts

groups that divide adjacent rows of cubes, studs and joists may be variously located at points ranged one module apart along the girts.

Fig. 59 shows a typical arrangement of the framing members — posts, girts, studs, and joists. It is usually necessary to locate studs adjacent to a post and joists adjacent to a girt, in order to provide means for supporting the edges of the surface parts at corners. In this illustration, all framing members are rectangular in cross-section, and approximately of dimensions that would be appropriate for wood or other material of that type. The joists and studs are designed symmetrically within their matrices. Their side surfaces, which do not form the surface of the structure and are not required for fitting to or connecting with other parts of the structure, are set in from the faces of their matrix in order to permit the material to be used in practical economical cross-section.

Fig. 60 shows a similar framing arrangement, in which the members are made of some metal in thin sheet form. The cross-sections of the members have been selected to demonstrate the ideal condition of symmetry. All the normal foci of fastening are available either for the interconnection of the parts of the frame or for the placing of the supplementary features.

Fig. 61 illustrates a framing that might be pre-cast of some such material as concrete. In the first two illustrations of framing, the normal position of girts and posts was used; but for the pre-cast framing the platform construction, with floor joists extending through the walls, is adopted for demonstration. Aligning members are placed above and below the floors to serve as means for receiving and locating the ends of the studs and joists, and these members constitute small separated girts. No post member is shown at the corner, but the post matrix is extended one module in the direction of each wall, and studs are located in the joint matrices that overlap the margins of the post cube group. This makes it possible to fill the corner space with a material that is poured and cast in situ. At the corners the post and the adjacent studs then form a solid mass

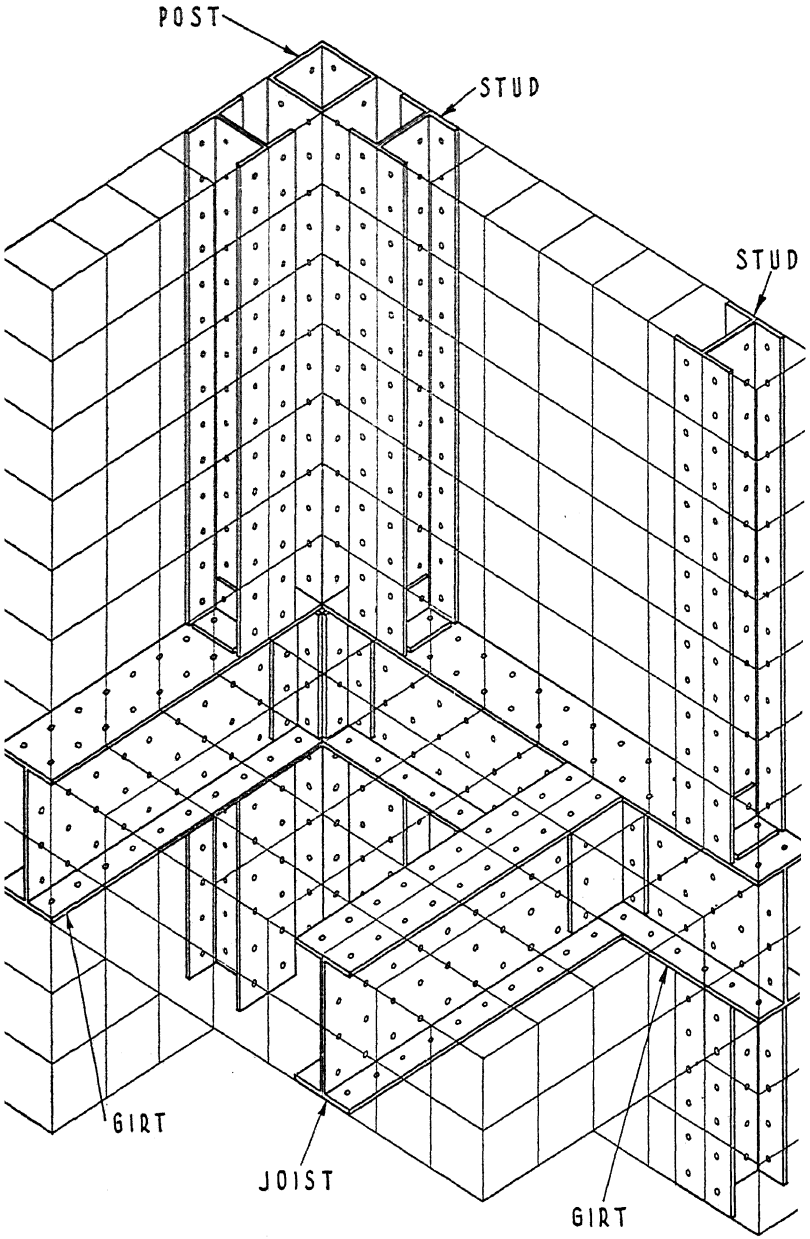

FIG. 60. METAL-FRAME ASSEMBLY

Shows maximum use of secondary foci

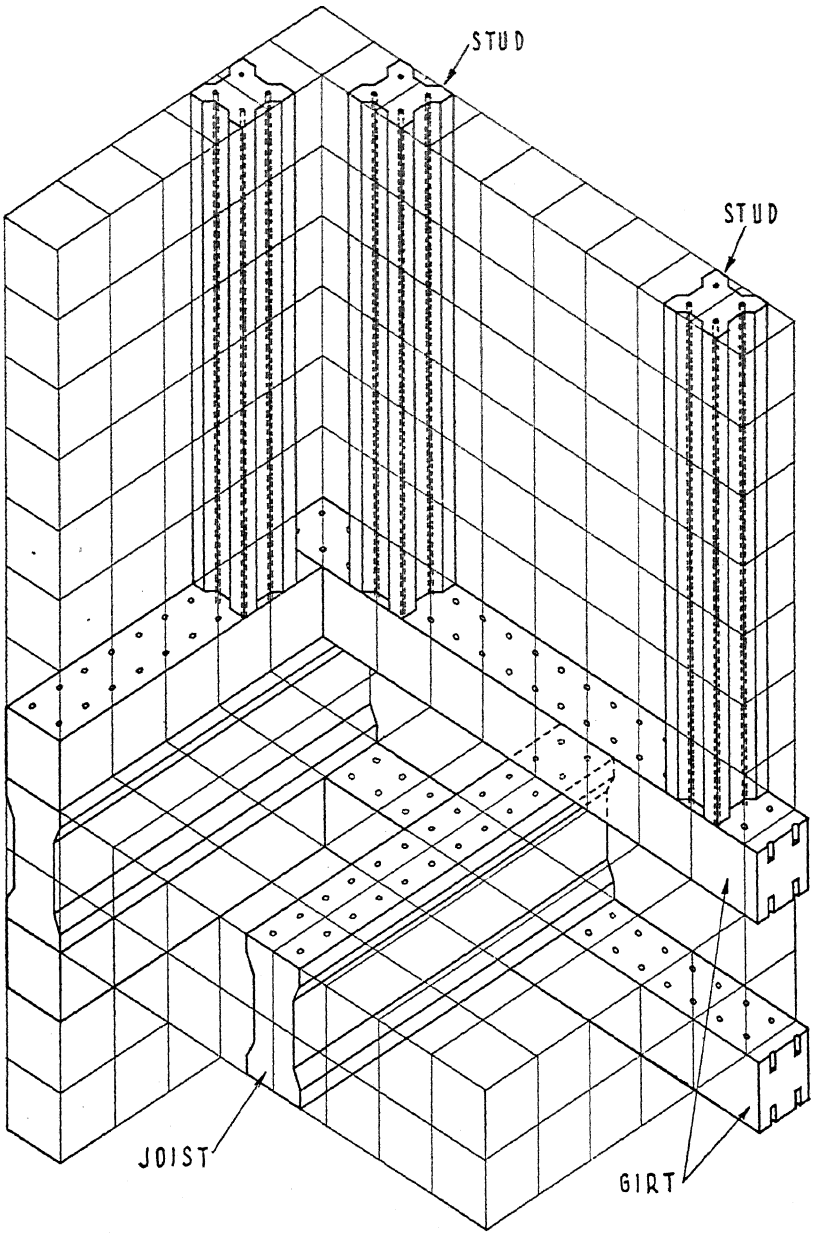

FIG. 61. FRAME OF PRE-CAST MATERIAL

This illustrates platform framing with separated girt

that is justified by the overlapping of the post cube group with the jointing matrices of the stud. As in the other framing assemblies, both studs and joists are placed in jointing cube groups, with the exception of the joist placed between the small girts that run parallel to the joists. This joist has a different purpose than the other floor framing members in that it is connected to structural framing members only and does not serve as an interconnecting element for the floor surface elements. It is in accordance with its function to place it within a line of structural cubes of the floor.

The methods of jointing framing members have been indicated partially in the three illustrations of assembled framing. The butt jointing shown for wood framing is an abstract representation of the connections that might be used in practical construction. Foci for positioning and fastening the studs and joists are shown repetitively along the girts. It should be noted that these foci are located on the axial planes of jointing cubes in order to position the subsidiary framing members in their jointing cube groups. The connection of the girts to the post may be assumed to be of the same type, but it is not usually necessary to repeat the foci of fastening along the post. The necessary holes or the appropriate details are designed at the ends of girts and at the correct locations on the faces of the post.

In the metal framing of Fig. 60, the complete repetition of focal points, both for the connection of framing and for the attachment of surface parts, is demonstrated. The horizontal members, joists and girts, are identical. The foci on their top and bottom flanges locate the studs when the members are used as girts, and cooperate as fastening means for the attachment of surface parts when they are floor joists. The foci along the web are available either for jointing a joist end to a girt or for jointing cross-framing members that may be needed for floor openings. The repetitive features in the studs have similar functions, make possible the standardized interconnection of the wall framing, including the members at wall openings, and provide ready means for locating surface elements.

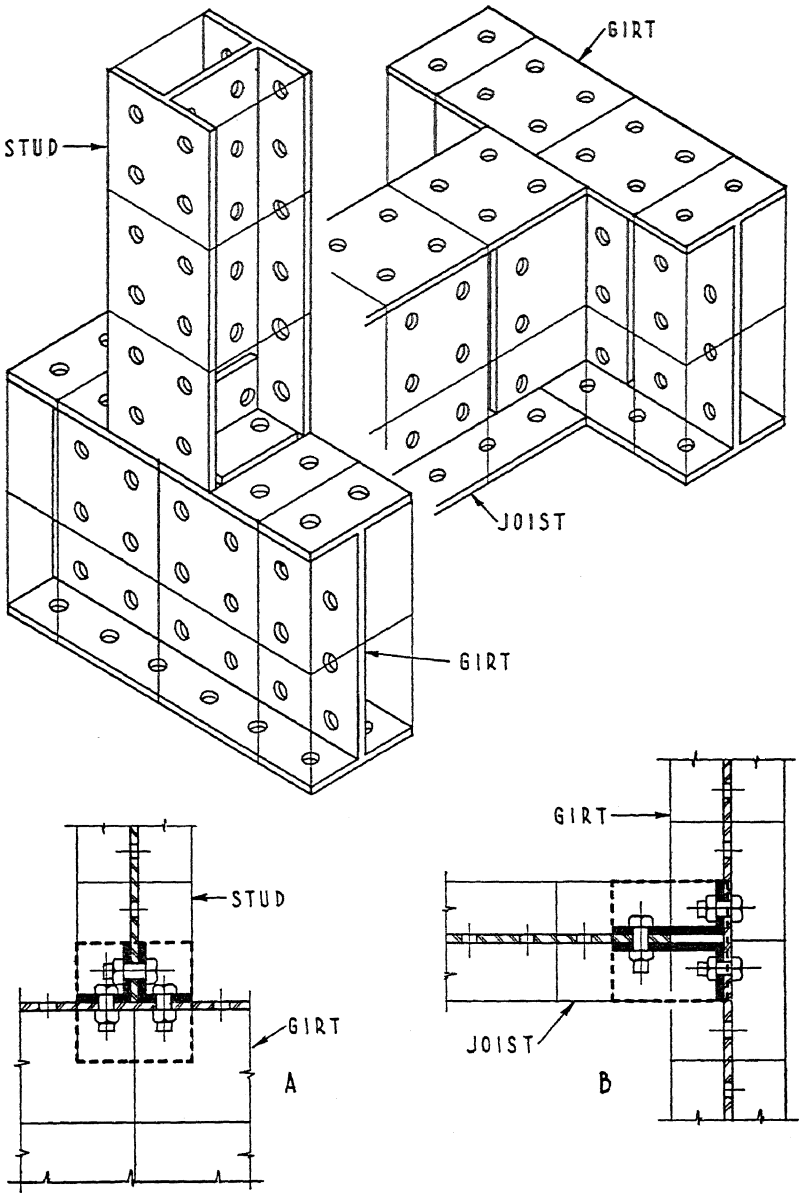

FIG. 62. INTERCONNECTION OF STUDS AND JOISTS WITH MAIN FRAMING

A—Vertical section at lower end of stud with interconnecting angles in black
B—Horizontal section at end of joist with interconnecting angles shown in black
Dotted lines indicate joint matrix

The interconnection of the studs and girt, and joists and girt, may be performed by small angle-shaped elements. A symmetrical arrangement of these is possible in Fig. 60 owing to the symmetry of the studs and joists in section, with web portions centered in the element. Drawing A of Fig. 62 shows an elevation view of the interconnecting elements assembled at the lower end of a stud. These elements and the fastening means as well are located entirely within the joint matrix. Drawing B shows in plan the interconnection details for the joist-to-girt joint. The interconnecting elements are again entirely within the joint matrix, but the fastening means, securing the angle elements to the web of the girt, extend through the web and beyond the boundary of the joint matrix. This is a condition that frequently occurs in the jointing of metal framing formed into conventional shapes such as channels. No inconvenience or interference is occasioned when these fastening means protrude beyond the normal joint matrix by an amount up to a half module, except that they should not be located on surfaces that are to be used for the attachment of surface elements, where they may interfere with the uniform fastening of parts placed outside the framing. To state this provision in the terms of an orderly procedure of design, the interconnecting elements for framing joints should be designed within the normal joint matrix, but fastening means may be located within a joint matrix extended a half module in both directions within the matrix of the structure. This extended matrix is adequate to meet the needs of practical jointing, and at the same time it prevents interference either in the jointing of framing or in the attachment of surface parts.

The small angles illustrated in these frame joints are clearly interconnecting elements, although they are not symmetrical in shape or location about the center plane of the joint. They are neither stiles nor splines, and the joint is essentially of the butt type. By attaching them first to the end of the abutting frame member, either by bolting or welding, they become an element of a factory-assembled member, and the fastening of the two mem-

bers together occurs in a direction perpendicular to the joint center plane and at the normal foci of the joint, the standard arrangement for a butt joint. The angle that interconnects the joist and the girt extends beyond the joist matrix, but as an interconnecting element it is properly confined within the joint matrix.

At the intersection of framing members the end of one member usually abuts the face of the other. An exception to this arrangement is shown in Fig. 60 where the ends of the floor joists pass between the two girt members so that the top and bottom faces of the joists are placed against the faces of the girts. Thus the fastening foci in the girts for both stud and joist connections occur on the top and bottom of the girts and not on their sides. The repetition of these foci on the joist faces locates the fastening means for the attachment of surface elements.

The jointing of girts to posts, where the posts run by and the ends of the girts butt into faces of the post, duplicates the conditions that occur in connecting joist ends to girts, except that interference must be avoided within the post where the jointing matrices overlap at right angles. With a square post of a material such as wood or cast concrete, and with the butt joints already demonstrated, the conditions are the same as for the post jointing shown in Case II. In metal framing, angular interconnecting elements may be employed and details may vary considerably. Fig. 63 illustrates two shapes of posts that are completely symmetrical and permit identical girt connections on any post face. Drawing A repeats the connection used in Fig. 60, but the post section is altered to one that appears more practical from the viewpoint of assembly. Drawing B shows a variation of symmetrical post design that is interesting theoretically because it actually employs the diagonal planes that were shown in Case II. The fastenings are all easily accessible, but the angular elements are of irregular shape.

The possibility of combining the extended post with adjacent studs is shown in Fig. 64 and is in accordance with the overlapping of the jointing and post cube groups. The studs of this

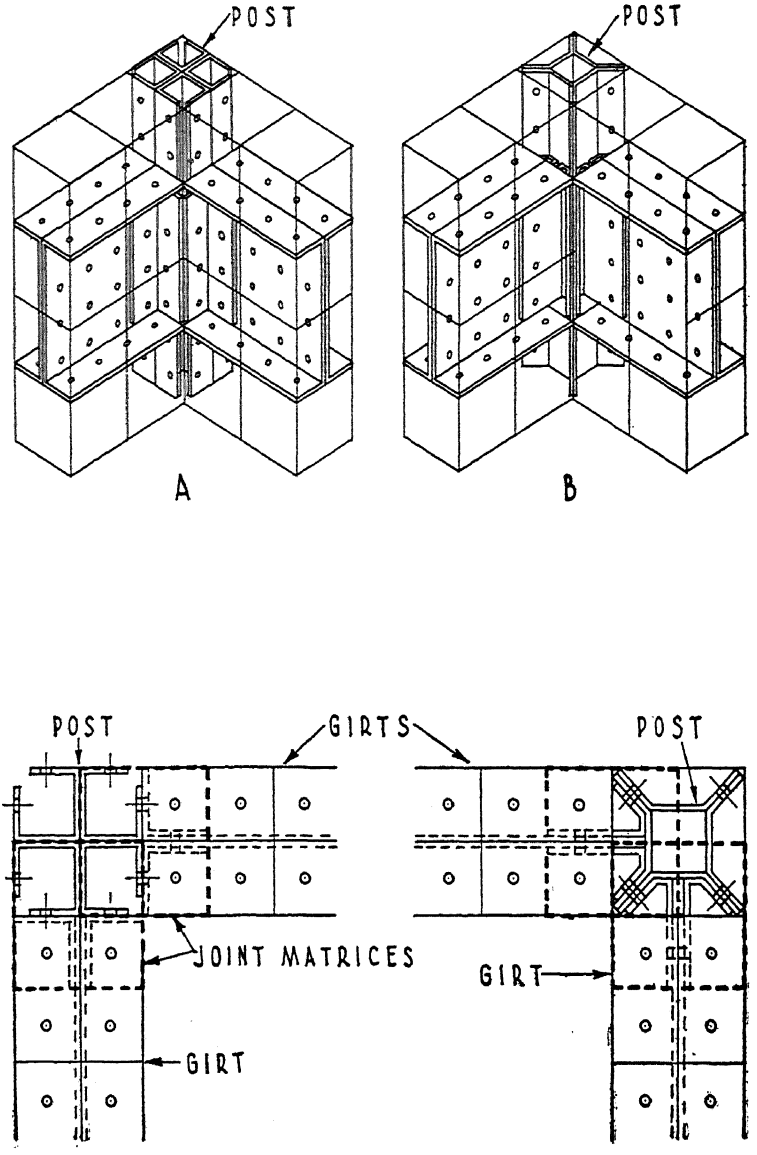

FIG. 63. INTERCONNECTION OF POST AND GIRTS WITH THE POST EXTENDING THROUGH THE GIRTS

A—Square post built up of four elements. Horizontal section is shown below

B—Star-shaped post with bent interconnection elements. Horizontal section is shown below

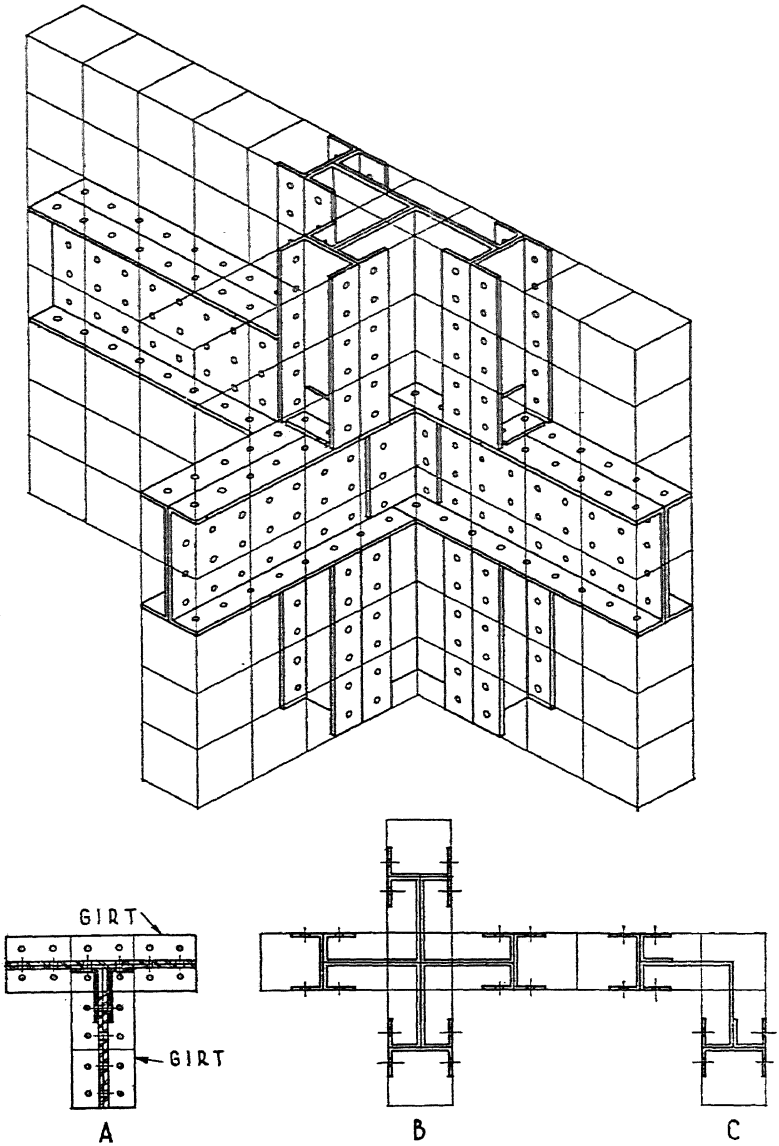

FIG. 64. INTERCONNECTION OF POST AND GIRTS WITH THE GIRTS EXTENDING THROUGH THE POST

Above is an isometric view of a 3-way wall intersection

Below—

A—Horizontal section showing the interconnection of the girts

B—Horizontal section through a post for a 4-way wall intersection

C—Horizontal section through a post for a 2-way wall intersection

framing are H-shaped, as in Fig. 60. The posts are pre-assembled members built up of post channel elements and half-stud channels, the half-studs lying outside the post matrix, and being designed within the jointing cubes prescribed for stud design. On account of this protrusion beyond the post matrix, framing connections cannot be made to the sides of the post, and girts must pass through them so as to be jointed to their ends. Drawing A is a horizontal section showing the jointing of the girts where one continues through the wall intersection and the end of the other butts into it, with the same details as for joist-to-girt connections. The ends of the post are jointed to the upper and lower flanges of the girts in the same manner as studs. Sections B and C show the post assemblies at four-way and two-way wall intersections respectively, indicating that the three shapes of posts can be built up by combinations of standard elements. This illustration affords an example of post and girt intersections where the intersection cubes are assigned to the girt matrix. It also demonstrates the possibility of joining half studs to posts.

The thickness of the parts placed upon the framing and outside the structure is governed by the properties of the materials of which they are made, and not by the module. In length and width, however, their design is controlled by the plane matrices afforded by the surfaces of the structural cube groups. A typical arrangement is illustrated in Fig. 65, in which the outside wall surface panels are substantially thicker than the inner wall panels. The edges of the panels are aligned with the central planes of the studs, which is consistent with the location of the jointing matrix. It is obvious that the finish panels would overlap at concave corners, and also that the finish would be incomplete at a convex corner, if the main panels were extended to the corner as defined by the location of the post and cut off there. To avoid this difficulty, the panel matrices are considered to end one module from the square posts or at the posts if they are extended a module into the walls. Corners are finished with two standard filler pieces, one designed to fit concave and another

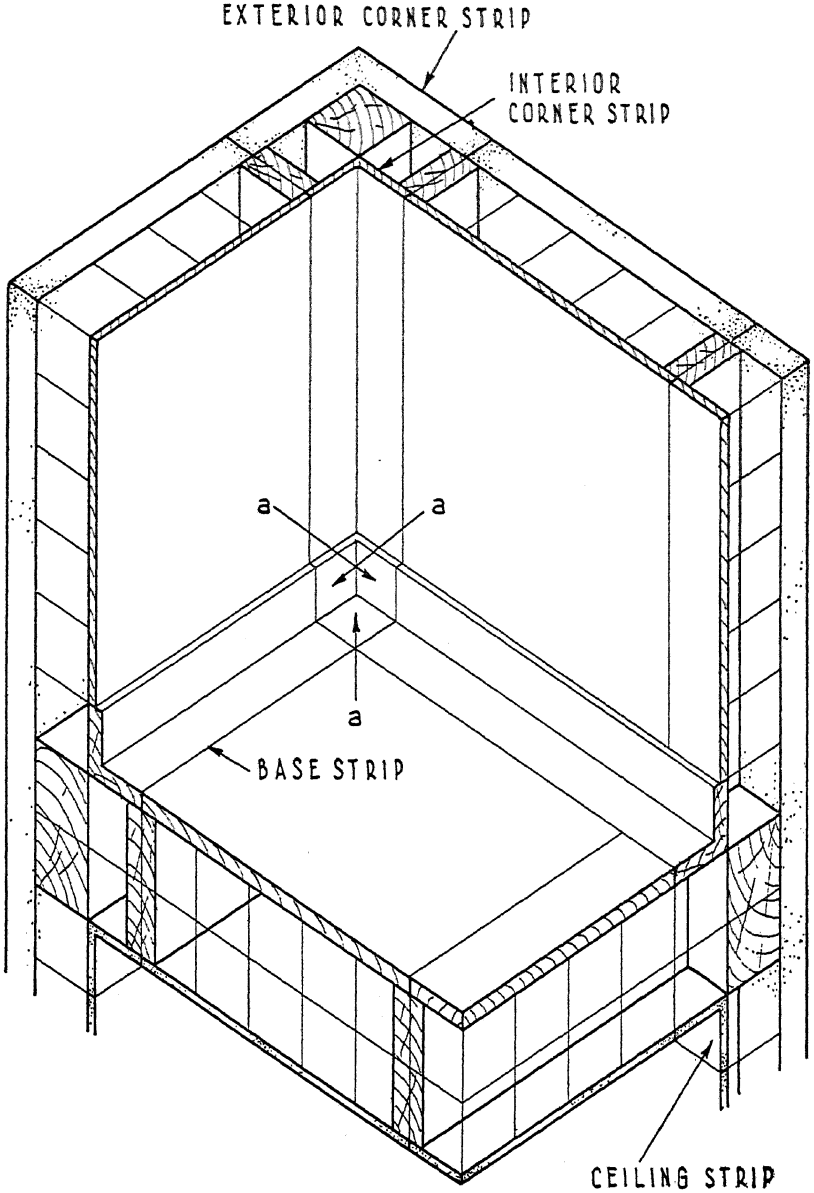

FIG. 65. SURFACE ELEMENTS APPLIED OUTSIDE THE STRUCTURAL MATRIX

Finish is cut back 1 M from all intersections, and corner spaces filled with standard strips. Corner unit is placed at a, where the corner strips intersect in three planes

convex corners. In a similar manner both the wall and the floor finish are cut back one module from the normal girt, and the gap is filled with standardized elements of trim, such as baseboard and floor border. A similar corner trim piece is required at the junction of walls and ceiling, and may include standardized features such as cornice or picture molding.

These standard filler elements at wall corners and at the junctions of walls and floors will themselves intersect at the top and bottom of wall corners. Some method of design must be provided for their jointing in three planes, without overlapping. The horizontal trim can be cut off one module short of the corner, and the vertical pieces extended full length from floor to ceiling; but this requires a special square element of floor surface at the corners. The ends of the horizontal trim can be mitered to fit together at the corner, and the vertical element can be cut off one module short of the floor and ceiling, so that its ends meet the edges of the base and cornice trim. This requires special cutting for the trim at corners, and is objectionable in that it involves this operation and the scheduling of finish parts. According to the cubical modular method, all the filler elements can best be cut one module short of the corner, and the space that is left vacant filled with a standard corner unit. These units provide finish surfaces in three planes, as in Fig. 65 in the space " a."

The fact that the subsidiary framing members, studs and joists, serve as elements of interconnection for the panels on the opposite sides of walls and floors has caused them to be designed within jointing cube groups. Viewed in this way, a stud becomes a spline, interconnecting two adjacent sections of wall finish. The foci of fastening that were used for integrated construction in Case II are available for the connection of the surface parts by extending them outward from the structure. Fig. 66, Drawing A, shows a horizontal section of a two-way wall intersection and illustrates the location of these foci. They represent the normal locations of holes in the framing that register with holes in the panels to receive some positioning device such as a screw or a bolt.

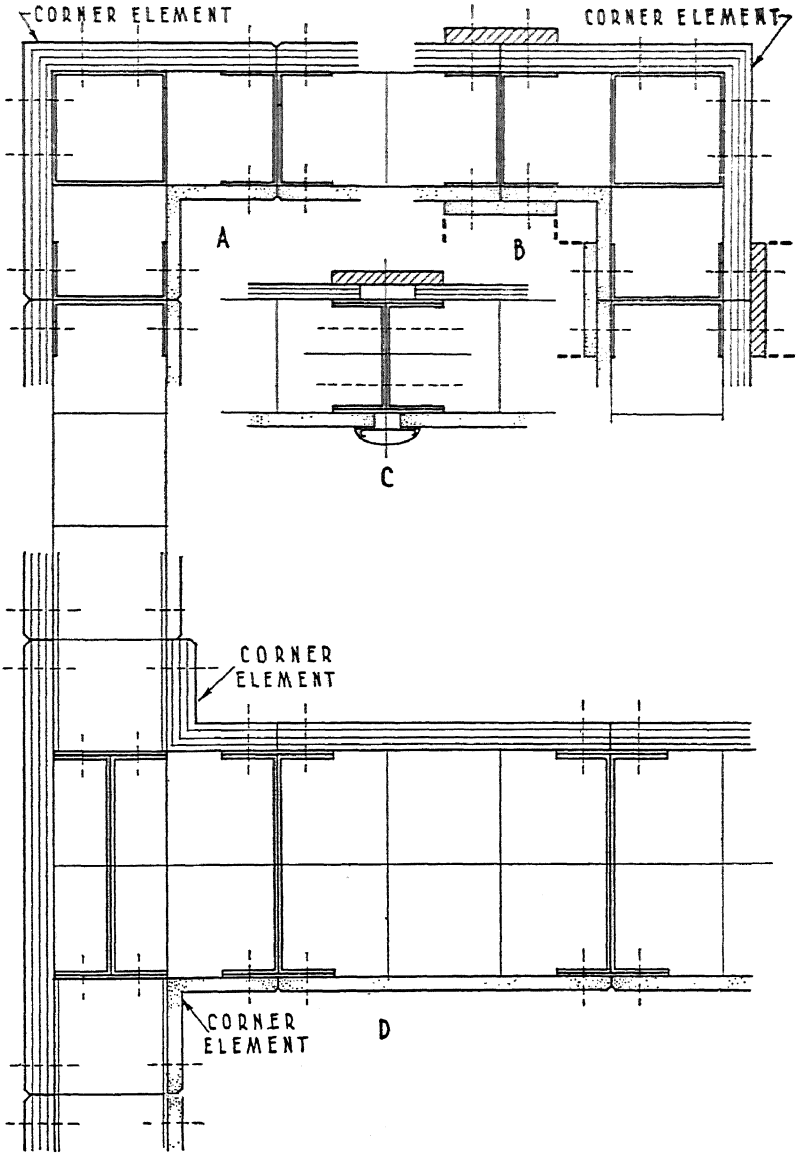

FIG. 66. ATTACHMENT OF SURFACE ELEMENTS PLACED OUTSIDE THE STRUCTURAL MATRIX

A—Horizontal section at a 2-way wall intersection with flush surface at joints

B—Same section as A with joints covered with battens

C—Horizontal section at intermediate wall joint with edges of surface elements secured by battens

D—Vertical section showing corner strips at floor and ceiling

It is sometimes desirable to apply additional finish treatment at the edges of panels. As shown in B of the illustration, this can be done by strips or battens, similar to stiles, that project out from the finished surface of the wall. It may be preferable to locate the means of fastening to the framing at the intersections of the principal planes of the jointing cubes instead of at the secondary intersections. This arrangement is shown in Drawing C. The battens are attached to the framing along the center line between the edges of adjacent panels. The panels may be held in place either by additional positioning means placed at the normal secondary foci, or merely by being confined at their edges between the battens and the framing. The width of such elements as projecting battens is limited by the surface planes of the jointing cubes extended out from the structure.

A sharp distinction has been drawn between the integrated and differentiated types of construction. However, it is quite possible to design structure that is a combination of these two types. For example, in Fig. 67, Drawing A illustrates a structure that is partially differentiated, consisting of composite members without separately erected studs or aligners but with the finish on one side non-integral, that is, applied in the form of separate elements attached to and lying outside the structure. Obviously the possible combinations are almost unlimited. Drawing B of this figure shows a construction that consists of prefinished wall members and aligning studs, disposed alternately along the wall and with all parts located within the structural matrix. The aligning studs are composite members that are partly assembled during erection. Three elements in them are factory-assembled and provide finish on one surface and, if desired, a large part of the strength of the wall, but the fourth element is applied after erection and includes the finish of the other wall surface at the stud. This separately applied element is shown pulled out from one of the joints. Aligning studs are placed adjacent to the post for convenience of assembly. In this particular construction, only the functions of strength and aligning are differentiated.

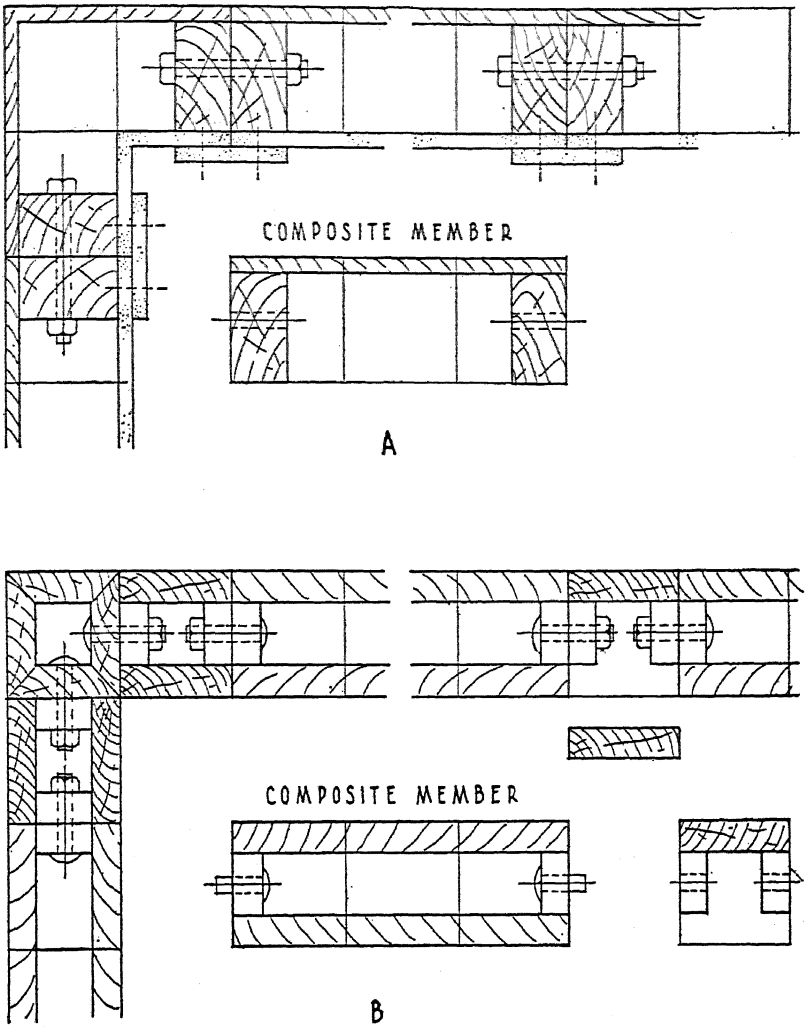

FIG. 67. PARTIALLY INTEGRATED CONSTRUCTIONS

A—Composite member consisting of structure and finish on one surface; finish on other surface separately applied to facilitate jointing of wall members

B—Wall structure consisting of alternate aligning and pre-finished structural members. Finish on one surface of aligning member separately applied to facilitate jointing

This Case has developed general methods for the design of all features located outside the structure, in both integrated and differentiated constructions. In the former, the projections occur at joints and are designed within matrices formed by extending the jointing cubes a half module out from the structure on either side. The extra-structural parts of differentiated construction are designed on the surfaces of structural cube groups arranged so that these surfaces are of sizes suitable for the surface or finish panels. These plane matrices stop one module short of the intersection cubes representing normal posts and girts, and the surface areas thus created at corners are filled with standard angular strips and corner units. By this procedure, systems of pre-finished panels may be standardized and produced by mass-production methods.

The design of framing for differentiated constructions has also been discussed in abstract terms. It was found that studs and joists must be centered in jointing cube groups in order to provide support for the edges of surface members, but in constructions in which this purpose is not important they may be designed in lines of structural cubes. For the interconnection of framing, angle elements that are unsymmetrical about the plane of the joint may be used. The fastening means used with these elements may extend beyond the normal joint matrix by not more than half a module, provided that they are so placed as not to interfere with the standard application of surface parts.

In all this discussion the dimension of the cubical module has been the structural-wall thickness. The original structural cubes of the total house matrix have remained intact, although many alternatives for their selection and grouping have been examined.

Case V

The previous Cases have been based upon the assumption that all structural walls are one module in thickness. If finish is integral with structure, as in pre-finished wall units, both are included in this single-module thickness. If the finish is separately

applied, finish parts can either be placed within the single-module thickness by designing the structural parts within the matrix so as to provide sufficient and exact space for the finish, or they can be applied outside the structural matrix, being designed on the plane module of its surface.

Building constructions requiring more than a single uniform wall thickness will now be considered. A double wall consisting of two single walls placed a small distance apart may be needed to provide insulation. Special weather-resisting qualities are demanded of the outer wall surfaces, and under varying weather conditions materials appropriate to them may be subject to considerable expansion and contraction. Some sort of compound wall may then be desirable. Brick veneer or masonry construction requires an extra thickness in the outside walls. To meet practical requirements, the cubical modular method must be extended to include structures of more than one wall thickness.

Thus far the demonstration of the arrangements of cube groups within the total house matrix has not included different thicknesses of structural walls. New selections of structural cubes must now be made; and this is done quite simply where the only change required is a two-cube thickness for outside walls. As illustrated in Fig. 68, all that is required is a layer of cubes added to the exterior of the outside walls. The shape of the intersection cube groups defining normal posts is changed accordingly. At a two-way outside wall intersection, the normal post matrix is of square section, 2 M on each side, while at a three-way intersection of an outside wall with an inside wall of a single module in thickness, the normal post matrix is of rectangular section, 2 M across the outside wall and M across the projected inside wall. Intersections of the interior single-module walls of course involve the post cube groups shown in the previous Cases. In this simple wall construction it is assumed that the outside wall structure extends across and fills the two-module thickness, with posts and girts of corresponding proportions.

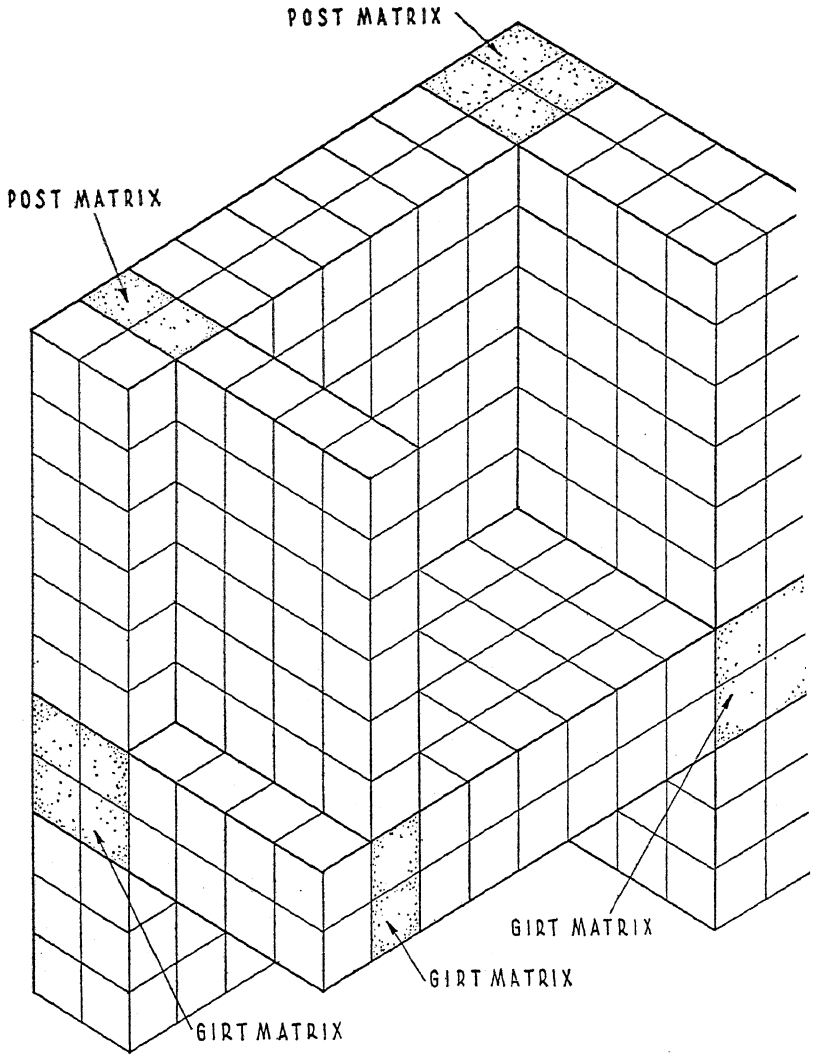

FIG. 68. CUBE GROUPS FOR 2 M OUTSIDE AND 1 M STRUCTURAL WALLS

Some constructions call for double or compound outside walls in which the inner portion, one module thick, constitutes the structural framing, and the outer portion is a siding of modular thickness. Drawing A of Fig. 69 shows the outside 2 M wall divided into two matrices to suit a compound-wall construction, an inner matrix for the structural wall, M thick, and an outside matrix for the siding or exterior veneer. The inner structural matrix is subject to the same arrangements as a single-module wall, with all the normal and extended grouping alternatives for posts and girts at intersections. In Drawing B, the outer matrix of the outside wall is increased in thickness to two modules. This 2 M envelope of space may be used in any one of several ways: it may be filled with masonry siding; a siding of reduced thickness may be centered in it, with a small air space between the siding and the structure; or else it may be used for a double-wall construction by designing the outer wall section in the outer single layer of cubes, with the space of the middle cubes left vacant or filled with insulation. These arrangements of cube groups will usually provide suitable matrices for either compound or double-wall constructions.

An example of a construction with an outside structural wall two modules in thickness is illustrated in Fig. 70. In this and in the other illustrations of thick outside wall constructions no attempt is made to develop practical details of design, as the purpose is merely to demonstrate the locations of the various parts relative to the modular matrices. The present drawing demonstrates an integrated type of structure with both outside and inside walls made up of pre-fabricated and pre-finished members. The structural strength of the outside wall members is supplied by an element of some cast material providing exterior finish on one surface with the opposite face indented with marginal flanges that furnish strength but are light and economical. The interior finish is provided by thin panels of wood or similar material, attached to the flanges of the pre-cast element. The inside walls consist of composite members of wood or similar material, built up of thin surface panels mounted

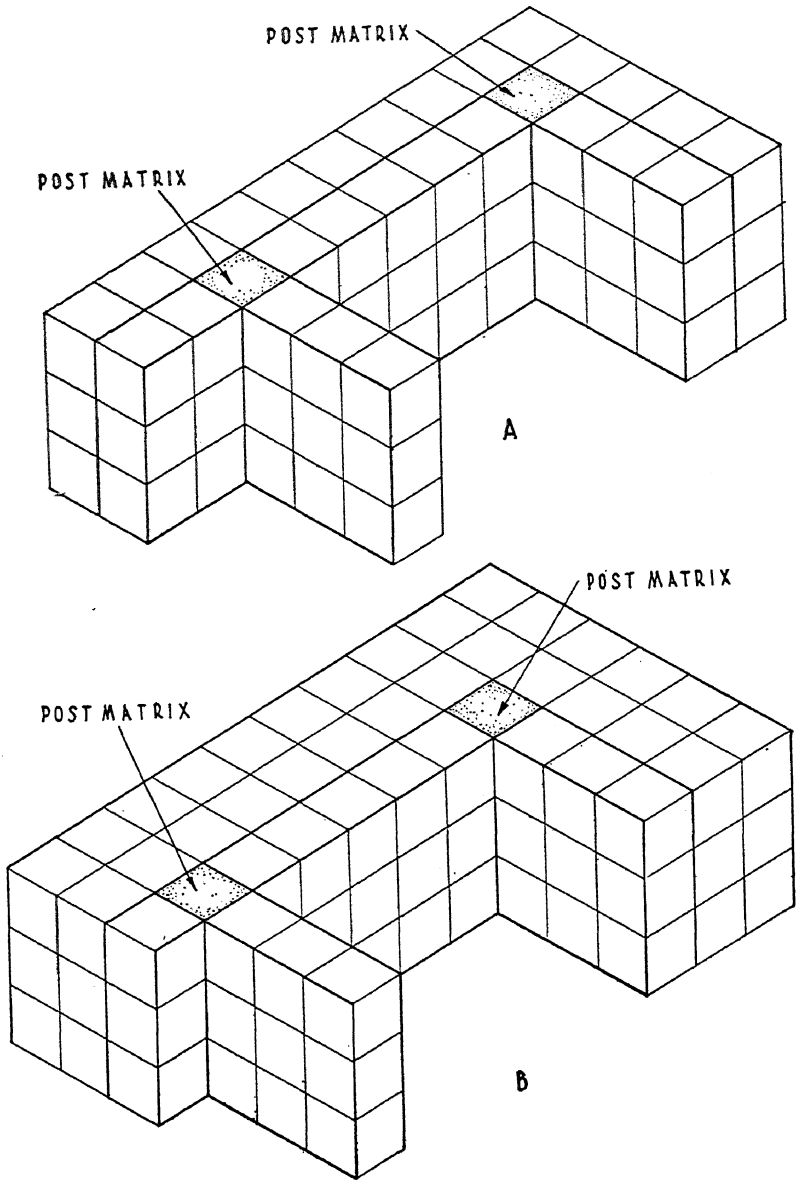

FIG. 69. CUBE GROUPS FOR 1 M STRUCTURAL WALLS WITH MODULAR SIDING OR VENEER

A—Matrix for siding 1 M thick
B—Matrix for siding 2 M thick

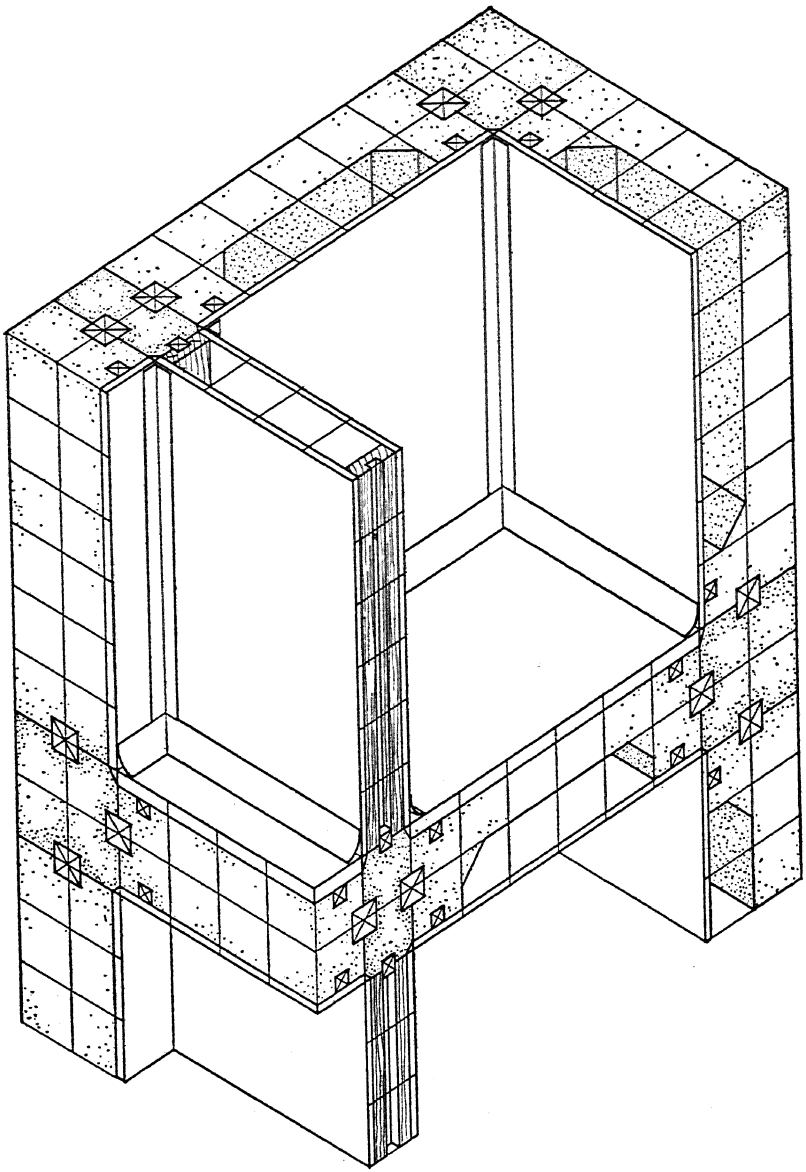

FIG. 70. CONSTRUCTION OF 1 M AND 2 M WALLS WITH FINISH WITHIN THE STRUCTURAL MATRIX

Outer wall structure pre-cast members, inner wall structure pre-fabricated composite members of wood

on core elements at the margins and at intervals in between as required for stiffening. The posts and girts are of a cast material, rectangular in section so as to fill their normal matrices. Splines are used for all joints. Except for minor features of finish to cover the joints, all parts of the structure lie within their cube-group matrices.

Where two thicknesses of structural walls give the opportunity of designing each wall system independently, it is possible to devise a large number of different combinations of design. It will be found, however, that some restrictions must be placed on selection in order to achieve maximum standardization, and also to conform to the usual conventions of interior finish. For example, Fig. 71 illustrates a semi-integrated outside wall construction combined with differentiated inner walls of framing and separately applied finish panels. For simplicity, the outside walls and floors are shown as made of some poured material cast in situ, with the intersections where normal posts and girts occur poured in solidly. The outside walls are a frameless construction with the exterior finish integral with the structure. According to the principles already established, the interior finish can be applied either integrally within the structural matrix or separately, and placed either inside or outside the matrix of the wall. With the outer wall cast in situ, the interior finish cannot be supplied integrally except by employing as finish the inner surface of the cast material itself. Any other finish material would have to be applied after the structure is erected and would not be integral. The cast surface would not usually be practical for finish in this combination of structure because the same treatment would not be available for the inner walls, and present convention requires that the treatment of all the walls of a room be reasonably consistent and uniform. Separately applied finish is called for, and if this is to meet the requirements of mass production it should be in the form of pre-finished panels. Standardization obviously requires that the panels on the 2 M and M walls be of the same materials, cut in modular sizes, and fastened by the same means through the same

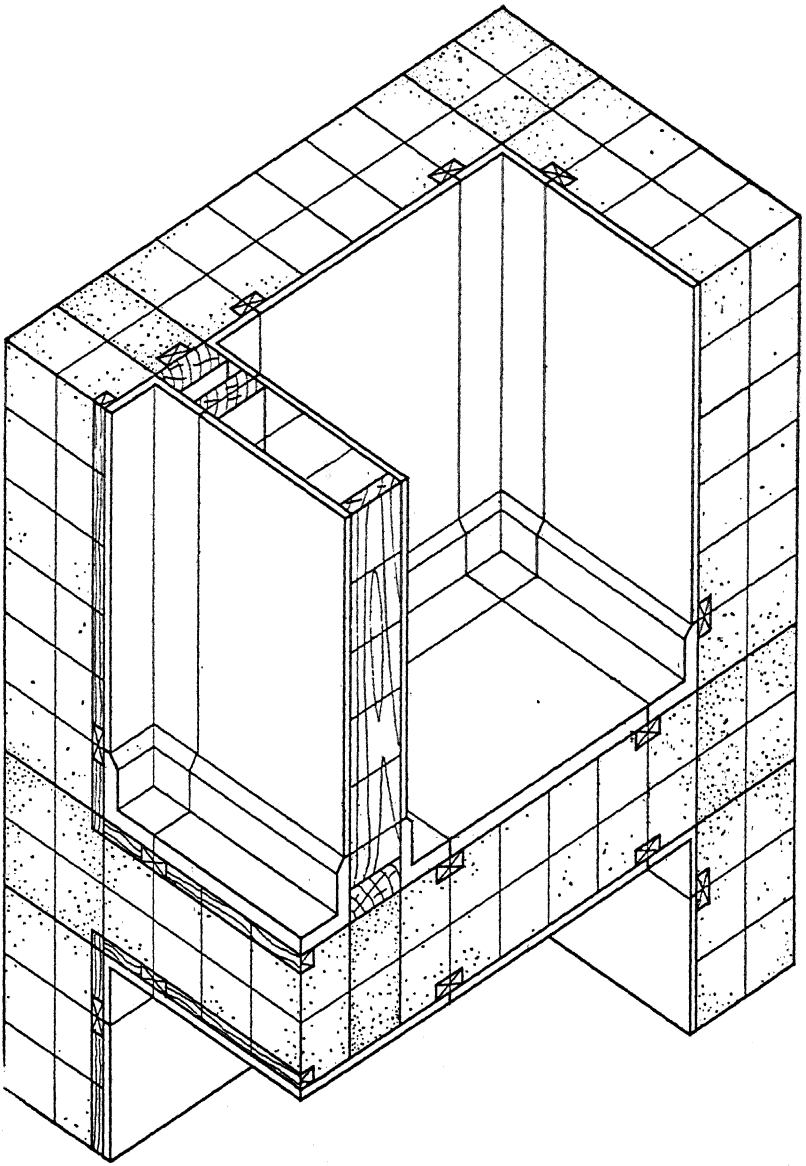

FIG. 71. CONSTRUCTION OF 1 M AND 2 M WALLS WITH FINISH OUTSIDE THE STRUCTURAL MATRIX

Outer wall structure cast in situ, inner wall structure wood framing

foci. In other words, the same modularity must be used for all walls. The panels are placed outside the structure because this is the normal position for the finish on the framing of the inner walls. With the modular filler strips and units at corners, the standardization of finish is complete.

Two combinations of structure have been illustrated: first, integrated structure for each wall; and second, framing for the inner wall with partially integrated, frameless construction for the outer thick wall. It is equally possible to design framing for the entire structure and to apply all surface panels outside the structural matrix. The application of interior surface panels has already been demonstrated in the last illustration, and exterior surface parts would repeat the arrangements shown in the preceding Case. To show more clearly the maximum use of all foci in the framing, both for the interconnection of the frame members and for the fastening of surface parts upon them, this construction is illustrated in Fig. 72 without the extra-structural parts. Metal is selected for the framing because it demonstrates more readily the standardized application of repetitive features. The symmetrical shapes of studs and joists previously employed, with web portions at their centers, are replaced by channels with the web portion placed unsymmetrically at one side. Two standard channel sections supply the entire framing, one section for the 2 M studs and joists and the other for the M studs in the inner walls. The posts and girts are formed by two 2 M channels placed back to back. The angle elements used as interconnecting means are of two widths, one for each width of channel, and two lengths, one for web-to-web and the other for web-to-flange connections. Punchings are repeated on every secondary focus, so that they are spaced a half module apart. A post is placed at the outside wall corner, but not at other wall intersections, as the studs located adjacent to the corners for the attachment of panel edges provide sufficient strength. The inner walls that run across the floor joists do not require girts, as studs can be attached to the joists in the required alignment. The walls running parallel to the joists

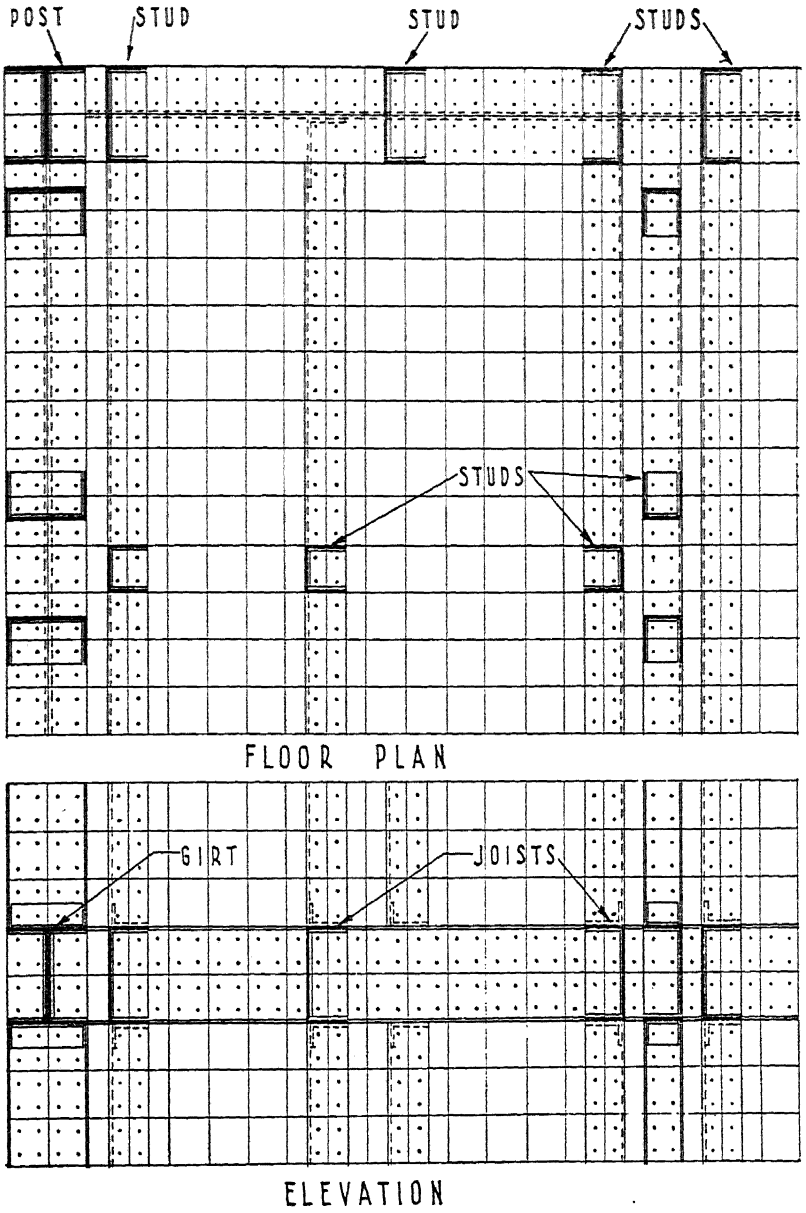

FIG. 72. FRAMING FOR A 1 M AND 2 M WALL CONSTRUCTION SHOWING COMPLETE USE OF FOCI

require some support for their studs, and a joist placed in a line of structural cubes then functions as a girt.

The analysis of this framing discloses a difference of detail in framing the inner and outer walls, permissible because of their different strength functions. The outside walls and usually some of the inside walls carry the loads of the house and are "load-bearing," while many of the interior walls are required merely to support their own weight and to provide adequate stiffness, and these are "non-load-bearing" or "partitions." The partitions require girts only for the attachment and positioning of their studs and not for strength. In the illustration just examined the 2 M walls were assumed to be load-bearing and the M walls partitions, but the same distinction and arrangement of framing can occur where all walls are M thick, and even for integrated structure girts may be omitted for the non-load-bearing walls, provided convenient means for positioning them are already available.

Compound and double walls need but little illustration or discussion because their arrangements are clearly indicated by the cube grouping itself. The inner structural portion is governed by all the modular principles of a 1 M modular wall, except for slight differences resulting from the transference of the function of exterior finish to the outer siding or veneer. This outer covering is designed in accordance with the properties of the material. If the material permits, it is subdivided into modular sections or units with jointing usually of the masonry type. Fig. 73 shows a veneer one module thick, centered in its 2 M matrix and placed outside of a framed structure. The space between the veneer and the framing is partially filled with surface panels attached to the framing to provide weather protection and possibly heat insulation. The interior finish is applied outside the structure in the prescribed manner.

Double walls may be designed as two separate structures, and the usual methods apply to each except for the surfaces that bound the air space between them. These surfaces perform no function of finish. The chief variations are in the degree of

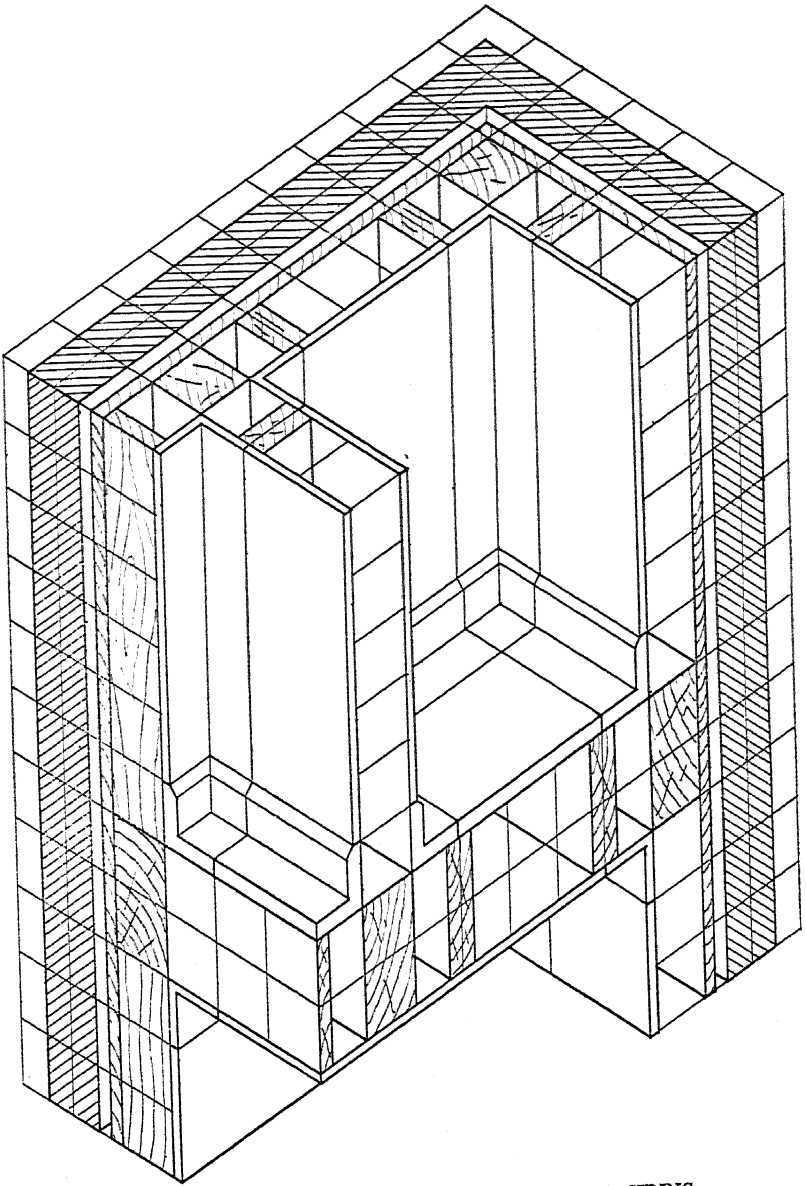

FIG. 73. FRAME CONSTRUCTION WITH MODULAR SIDING

The surface elements on the framing are outside the structural matrix, but those between the framing and the siding are placed within the siding matrix

separation between the two structures. In Fig. 74 complete separation is shown. The outer wall consists of composite vertical members extending from the foundation to the flat roof; they afford weather protection and carry the roof load. The inner structure rests independently on the foundation, carrying the floor loads and providing interior finish. This structure is illustrated in section to indicate the relative positions of all the members and the shape and composition of each. The outside wall is made of a material that affords a high degree of heat insulation, while the metal of the inner structure is a good conductor of heat and might be employed as a means of distributing heat throughout the house. In other variations the double walls could be bonded together at floor levels by heavy girts, and a single roof construction, resting on both walls, could be used. For all of these the suitable method of cube grouping can readily be found.

This Case has demonstrated that the modular thickness of outside walls can be increased by a suitable selection of cube groups and by the design of the parts of the structure within these matrices according to the principles already set forth in the preceding Cases. The type of structure for the outside walls may be different from that of the inside walls, but the combinations should be selected to afford a maximum standardization of parts and a uniform treatment of inside finish. The compound and double walls involve no new principles of modular design. The distinction in function and design between load-bearing and non-load-bearing has been pointed out, and it has been shown that non-load-bearing walls do not require girts where other means are available for the attachment and positioning of the studs. This last principle applies to any construction, whether of a single or two different wall thicknesses, and to integrated as well as to differentiated or framed structure.

Case VI

This Case is concerned with the design, according to the cubical modular method, of sloping roofs and other non-rec-

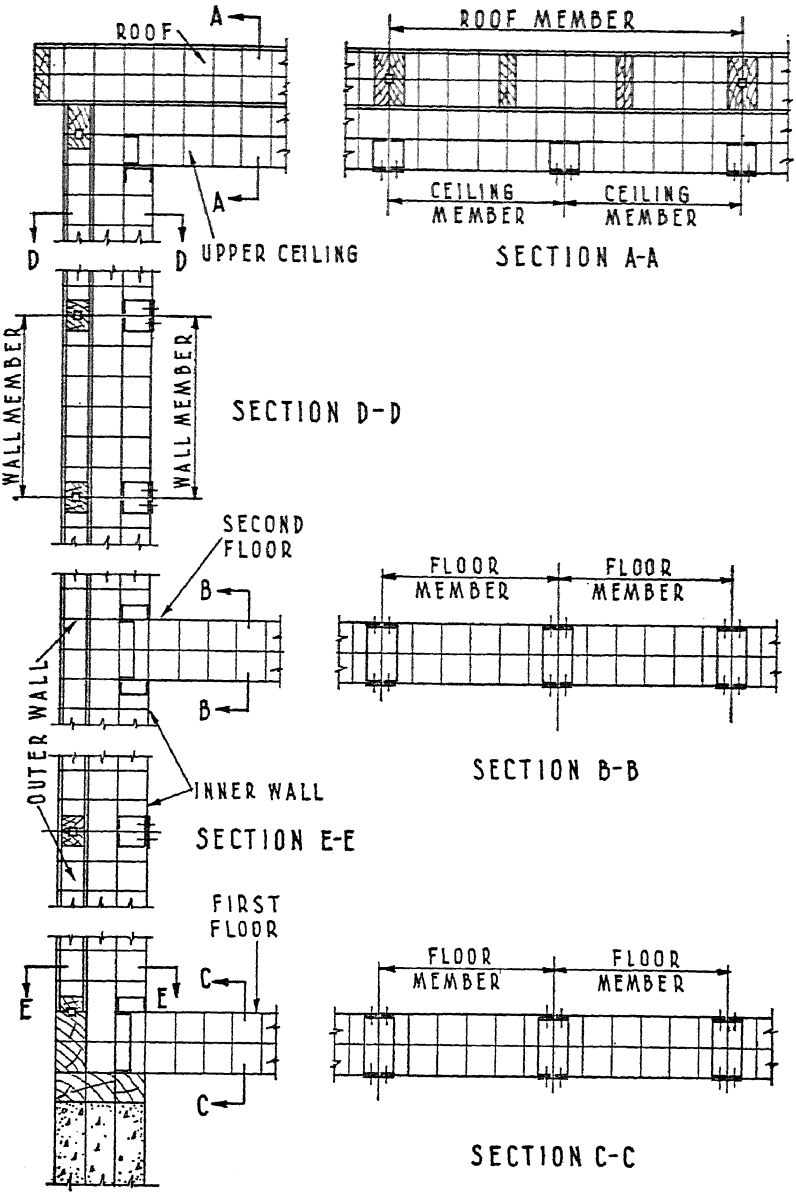

FIG. 74. A COMPLETELY SEPARATED DOUBLE-WALL CONSTRUCTION

A–A—Vertical section through roof and upper ceiling members
B–B and C–C—Vertical section through floor members
D–D and E–E—Horizontal sections through wall members

tangular features that are characteristic of the present-day house and of probable significance for the future. The extension of the method to include inclined members and irregular shapes must, however, involve some compromise, inasmuch as the cube as a module of design was based on the assumption of complete rectangularity of house structure. From the viewpoint of practical design and manufacture, the importance of the necessary compromise will vary in proportion to the diversity required in the shape and pitch of roofs and other non-rectangular features.

The abstract problem of modular design for a sloping roof is illustrated in Fig. 75. One of the series of vertical modular planes of the rectangular house structure that are perpendicular to the roof surface is indicated by the hatching of the upper drawing. These planes, M apart, cut the roof into strips one module wide. Hence, in one dimension the roof can always be modularly consistent with the rectangular house structure. The lower drawing shows a section of the structure on one of these planes. The angle of roof inclination is denoted by Θ, and one of the roof dimensions must be taken along this slope. The thickness of the roof members must be measured perpendicularly to the roof surface, and hence this third dimension must be taken at an inclination Θ from the vertical. The first problem of modular roof design, then, is to determine what module shall be used for these two dimensions in order to arrive at a space unit with six rectangular faces, a unit that may or may not be a cube.

In the selection of modules for the two roof dimensions lying on the vertical modular planes there seem to be but two alternatives; either the M of the rectangular structure may be repeated in these roof dimensions or else the projections of the M of the structure on two planes of the roof may be adopted as standards. The latter procedure would have the disadvantage of requiring for repetitive features on the roof a different gauge than that for the rectangular structure — and a different roof gauge for each different slope of roof. The purpose of using a

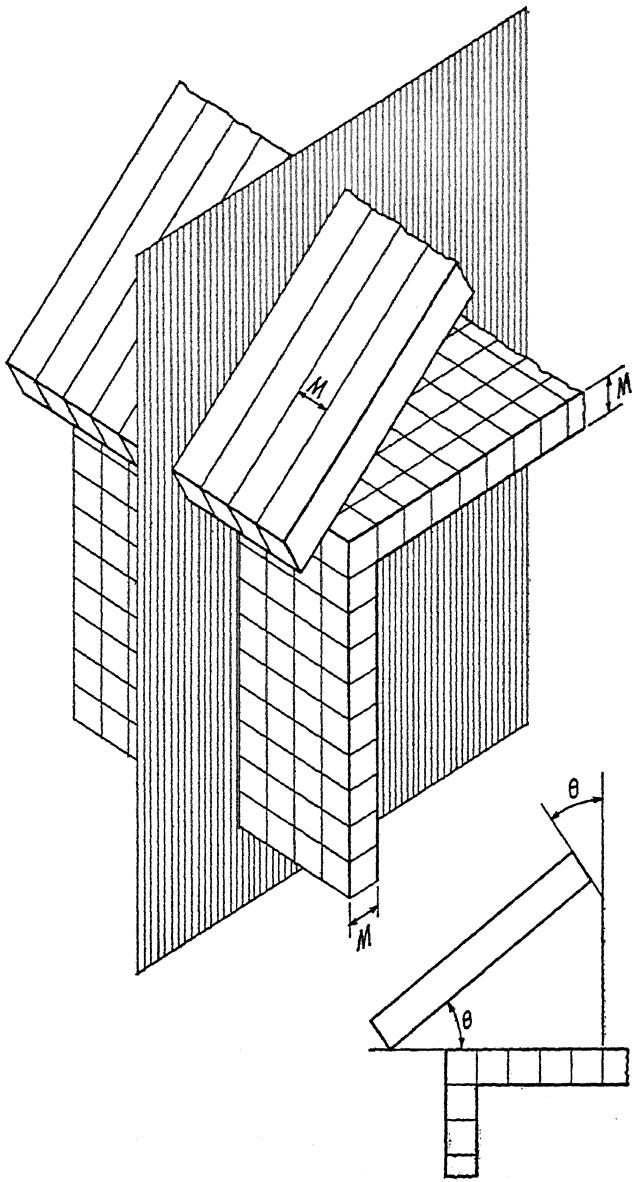

FIG. 75. THE THREE DIMENSIONS OF A SLOPING ROOF

The upper view demonstrates that the modularity of the roof is the same as that of the rectangular portion of the structure in one dimension. The lower view shows in elevation the relations of the other two dimensions

projected module would be to provide repetitive features that would register properly for interconnection and would facilitate the connection of the roof to the lower structure. Unless it can be shown that the use of the projected module does facilitate interconnection, it may be assumed that the maximum possible standardization would be obtained by repeating the M for all roof dimensions, or, in other words, by adopting the structural cube as the module for the design of the main roof structure, and by effecting interconnection with the fully rectangular portion through plates, hip, and valley, and perhaps other members of special design varying with each particular construction.

The projected module is shown in Fig. 76. In Drawing A the roof slope θ corresponds to the 3, 4, 5 right triangle, a rise of 3 in a horizontal distance of 4. The roof length unit along the slope becomes M secant θ, and the depth M cosecant θ. For the special slope of 45 degrees, these length and depth units would be equal and become $\sqrt{2}$M. If the slope is much less than 45 degrees, the roof depth unit increases rapidly in size, and it may then be convenient to use the projection of ½ M as the module. The same is true of the module along the slope, if the roof is much steeper than 45 degrees. By projecting vertically the normal primary and secondary foci, locations are found on the roof for repetitive features that may facilitate the standardized interconnection of the structure and the standard application of surface elements.

Drawing B of this illustration shows a possible application of these matrices and foci to a metal-frame construction at a gable end. The frame members are all channels so that surfaces are available for the support and attachment of surface elements at all their edges. The connection of the vertical studs to the sloping frame member of the roof must be accomplished by some element such as an angle of roof inclination. The punchings of the angle connector on the leg that is attached to the roof rafter are standard for any modular position of the vertical stud, but the punchings on the vertical leg will vary for different stud positions. For the slope here selected, that of

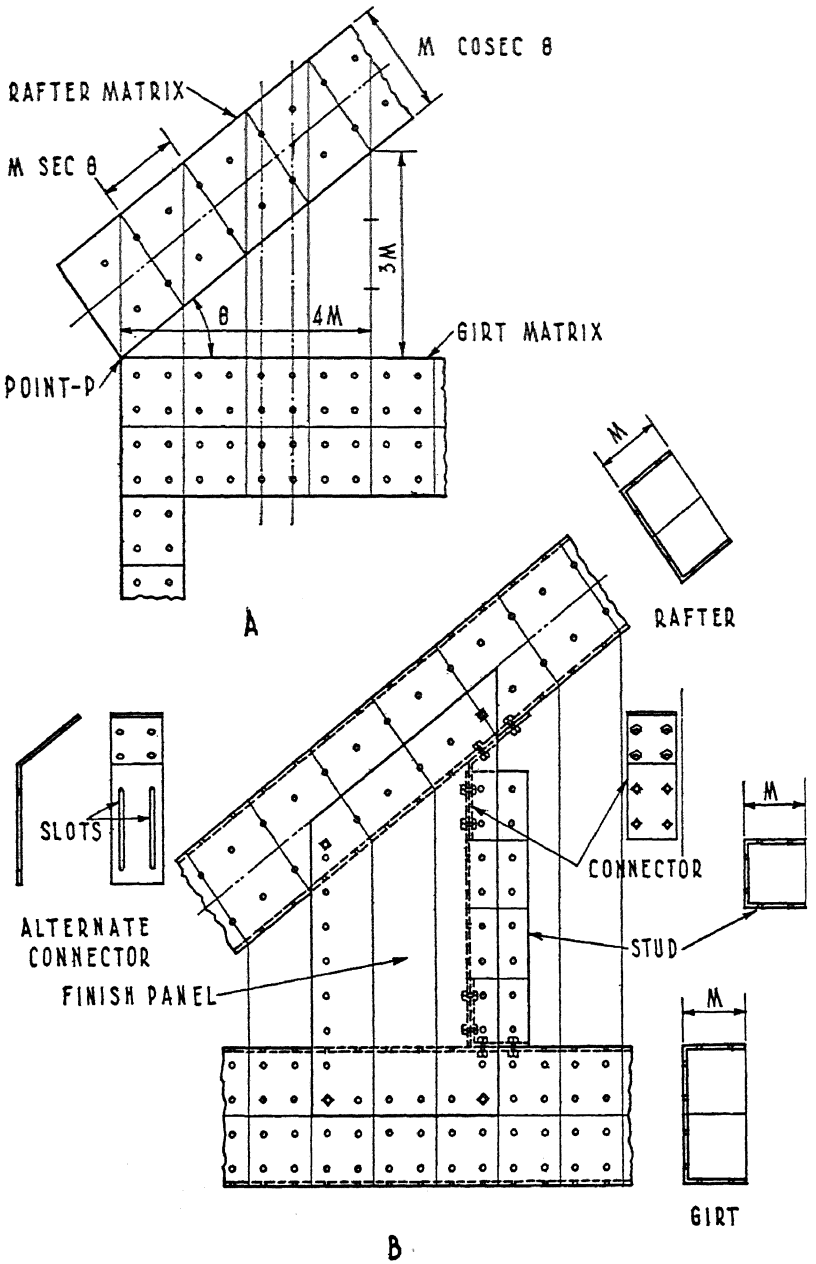

FIG. 76. SLOPING STRUCTURE DESIGNED ON A PROJECTED M MODULE

a rise of 3 in every 4 of horizontal distance, the height of the upper modular end of the vertical studs relative to the punchings on the rafter has four possible positions. These repeat in series of 4 M as the stud position moves horizontally along the girt. Since the punchings on the studs occur every half module, only two different standards of punchings on the connectors are required. A single standard connector could be provided if, instead of the round holes, slots of appropriate length were cut in the vertical leg as shown in the illustration.

For other slopes of roof a limited number of positions for punchings at the upper end of the studs will readily be found, provided the slopes are selected so that the rise is commensurate with the horizontal distance. The smaller the integers that express this ratio of rise to horizontal distance, the fewer will be the standards required for angle connector punchings. For example, with a rise to horizontal distance ratio of 2 to 3 there are three positions for the stud upper end; for a 4 to 5 ratio there are five positions. These various positions always repeat in uniform cycles as the stud moves along the girt. For a few representative roof slopes, Fig. 77 demonstrates graphically the vertical modularity of the points at which the roof plane intersects vertical M lines. Other slopes may be analyzed in the same way. The 45-degree slope with a 1 to 1 ratio offers the greatest opportunity for standardization, as with this slope the stud end position relative to the punchings on the roof rafter is always uniform. For any of these slopes, surface wall elements or panels may be attached to the gable-end framing through the repetitive punchings. The panels will be cut with the lower horizontal edges at right angles to the vertical edges, but the upper edges will be cut at a non-modular line sloping at the angle θ from the horizontal. Standard modular punchings may be used at the three right-angle edges, and punchings at the bias edge can be located on the vertical lines through the punchings of the lower edge.

The alternative to projecting the M of the rectangular portion of the house on to the sloping structure, and thus obtaining

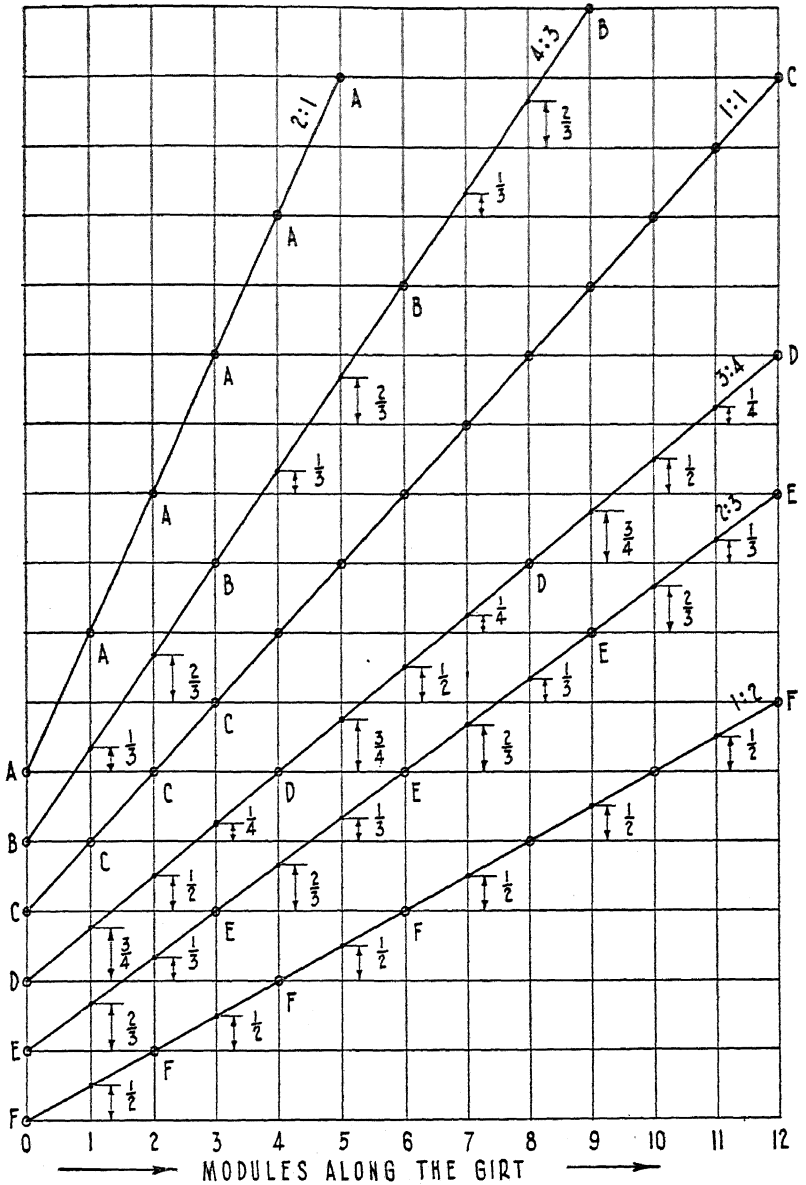

FIG. 77. VERTICAL MODULARITY FOR VARIOUS ROOF SLOPES

The length units along the slopes are projected M. The intersections of the sloping lines with the vertical modular lines are lettered where their height is modular. Where their height is non-modular the fraction of M between the point and the nearest modular plane below the point is indicated by a fraction

special linear modules for two of the roof dimensions, is to employ the normal cube as a module for the roof so that all three roof dimensions are measured in units of M. Each different roof slope will constitute a separate modular system that coincides with the modular matrix of the main structure along a single horizontal line, usually the top outer edge of the plate matrix. In Fig. 78 a frame construction similar to that of the preceding illustration is shown, with the rafter designed within a matrix of normal cubes. The modular system of this roof slope coincides with that of the main structure along the line at the upper corner of the plate, the trace of which is indicated by the point P in Drawing A of Fig. 76. The 3 to 4 slope ratio gives a commensurate length along the slope, the familiar 3, 4, 5 right triangle. For this slope the modularity of the upper ends of the studs, relative to the rafter, will repeat in 4 M cycles as the stud is shifted along the girt. A single standard angle connector can be used if the intervals between stud centers are limited to multiples of 4 M. Otherwise angle connectors must be supplied with four spacings for the connector punchings or else have slots in both legs. If slots are used, a single design of connector will be sufficient for any particular roof slope; but a different angle will be required for each slope.

The gable-end panel shown in Fig. 78 includes repetitive features along its three right-angle edges, but these are omitted on the bias edge. This edge rests on the surface of the channel rafter. Its fastening means may consist of a batten strip or stile that is secured to the rafter, through the centered punchings, by elements that pass between the edges of adjacent surface panels. If punchings are provided along the bias edge, they will have the same modular spacing as those along the other edges; but their modular positions on any intermediate panel can be determined only by measurement back to the point that is common to the two modular systems.

The rafters of a framed roof are usually tied together along the ridge by some horizontal framing member. This member will be designed within a group of normal cubes located by

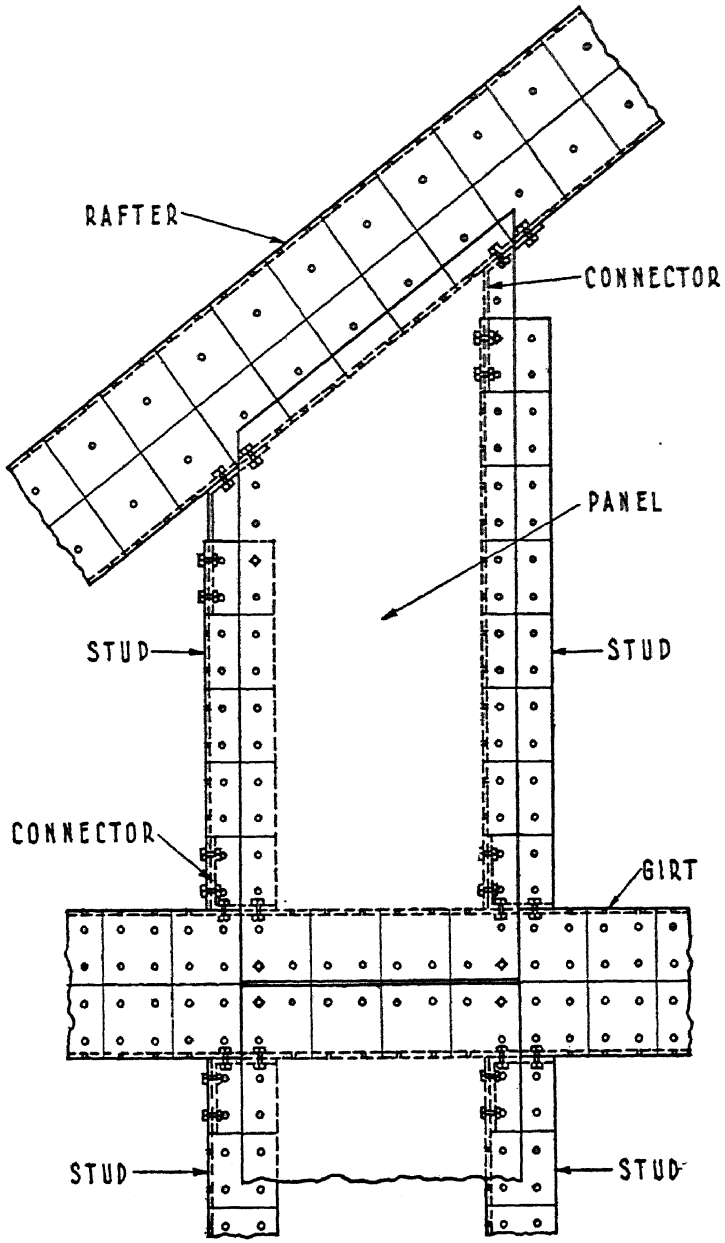

FIG. 78. SLOPING STRUCTURE DESIGNED WITH THE CUBE AS A MODULE

projecting vertically from the matrix of the rectangular structure a line of structural or jointing cubes. If the center of the roof span falls on cube centers, the matrix will be a projection of jointing cubes. The height of the ridge beam from the girt will not necessarily be modular. Drawing A of Fig. 79 shows in elevation the interconnection of rafters and ridge beam, where the projections of M are used as modules for the sloping structures. The interconnecting element, in the form of a bent plate, is standard for any roof slope, and the punchings shown on the rafters and studs are available for the attachment of surface panels. Such panels can be punched modularly on their three right-angle edges; the punchings on the bias edge are located as projections of those on the lower edge.

If sloping roof structures are designed with the normal cube as a module, there will be a non-modular interval between the ends of the rafters and the ridge beams. The elevation of this interconnection is shown in Drawing B of Fig. 79. The distance N is non-modular and can vary from 0 to M for different roof spans. The bent plate that interconnects the ridge beam and rafters can be designed with slots M in length, and with this as a means of connection that can accommodate the three modular structures at once, a maximum degree of standardization is possible. Surface panels suitable for attachment to this framing would be punched modularly along the three right-angle edges, with no punchings on the upper bias edge. This upper edge would meet but not overlap the rafter punchings, so that a batten or stile, fastened to the rafters through their punchings, could hold it in place.

Two general methods for the modular design of sloping roofs have been developed above, but no attempt has been made to analyze all the problems that may arise in interconnections at eaves, hips, and valleys, or with integrated types of construction. The design of any inclined structure that might normally be required could be effected, however, by one of the two methods outlined. In the early stages of the development of any particular structural type, inclined portions may best be designed

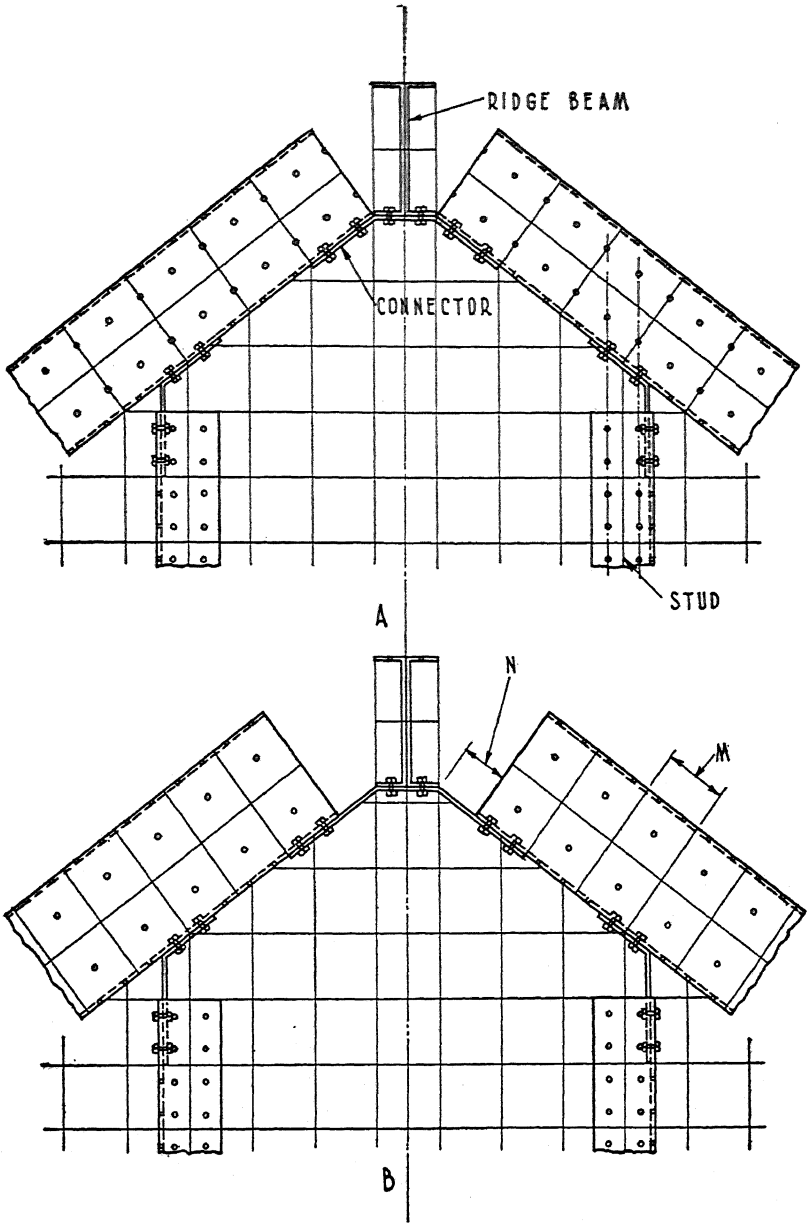

FIG. 79. INTERCONNECTION OF RIDGE BEAM WITH ROOF RAFTERS

A—Sloping structure designed on a projected M

B—Sloping structure designed with the cube module

according to the same cubical module as that adopted for the rectangular portion, and interconnection be accomplished for each construction by special parts at eaves, hips, valleys, and gable ends. With the growth of mass demand and mass production, the relative advantage of design according to special modules and for a very limited number of slopes will increase. But in initial developments — and in view of the nearly negligible proportion of required modern housing structure that is not rectangular — the application of the module to inclined structure is not essential to success. In fact, until mass-produced rectangular structure is actually used in quantity, any inclined structure required may better be supplied, as at present, by traditional means. But the methods just outlined will provide the means for complete conformity to cubical modular design.

Concluding Comment

The abstract Cases here discussed have demonstrated the dimensioning of structural parts according to the module, the standardized design of jointing and composite members within cube matrices, and the modular relation of superimposed parts. They have shown the theoretical application of the principles of cubical modular design to both integrated and differentiated types of construction, and the adaptation of this method to the design of inclined members and other non-rectangular features. But the theory of cubical modular design, as set forth in the preceding pages, has assumed certain ideal properties in materials. It also presupposes the possibility of mass production and of mass demand, upon which mass production depends. Its principles of design are definite and cannot be fulfilled by parts dimensioned, as at present, by rule of thumb from materials suited to the cut-and-fit process.

Existing structure is of the highly differentiated type, and to standardize it to suit the demands of modular design the methods of Case IV, and in part those of Cases V and VI, would be particularly appropriate. The structure of the fu-

ture will be of the integrated type, for the modular design of which the methods of Cases II and III, and in part those of Case V, are appropriate. By applying the theory to existing practice, the changes in form and material that are needed to meet the requirements of cubical modular design and the demands of mass production will become apparent, and through test in the factory and field the new building structure will evolve logically and in reasonable time.

CHAPTER VII

Applied Cubical Modular Design

CUBICAL modular design, now demonstrated in theory, must also be translated into terms of existing materials, and the theoretical principles laid down must be applied to the design of structural members for specific types of construction. Since the ideal material, an unvarying homogeneous substance requiring no tolerances for expansion and contraction, is not available, the problem of dimensional variation must be met. In the design and assembly of actual parts made of existing materials, compromises must be made.

In the selection of materials ultimate cost must dominate, and the engineer must give the house owner the maximum value in comfort and attractiveness. Successful selection demands the highest order of skill and judgment. A complete catalogue of all available building materials cannot be included in this volume, and while a brief discussion probably conveys no new information to those conversant with the housing industry, it will emphasize the practical necessity of allowing for the peculiarities of materials in the design of house parts. In the preceding chapter, building materials were referred to in three groups or classes: wood and fibrous materials, ceramics and cast materials, and metals. Materials used solely for heat insulation were treated separately. The most important building materials are included in these groups.

In this country, wood is the predominating building material for houses. Although the supply is by no means inexhaustible and the cost of certain kinds already forces many substitutions,

wood is still one of the cheapest structural materials. It does not, however, lend itself well to a high degree of standardization. Except along the grain, it undergoes appreciable changes in dimension with changes in moisture content, and this variation is frequently accompanied by warping and twisting. Not only must care be taken at the time of manufacture to see that the wood is of uniform moisture content through its entire cross-section, but it is equally important that moisture be controlled during manufacture and subsequent storage, if parts are to be of standardized dimension at the time of erection. This fundamental and characteristic property of wood demands the use of expensive and elaborate equipment to accomplish even the small degree of standardization thus far attained. It is especially troublesome when timber, such as girts, is framed cross-grained to other timber, such as studs; and finish is likely to bulge or split because of the unequal contraction and expansion of the members to which it is fastened.

Except for this expansion and contraction, and its tendency to warp and twist, wood is an ideal building material. It is relatively light per unit of strength and may be shipped cheaply; it is still plentiful and inexpensive; with the protective means now devised, it is reasonably durable for both inside and outside use; it is a relatively good thermal insulator, though only moderately effective against the passage of sound; it is susceptible of a wide variety of esthetic treatments, and is easily worked in the shop. It is, of course, not fireproof, although its fire-resisting qualities are said to be improved by certain chemical treatments. Renewed attention to termites and other wood-destroying insects suggests new questions as to its durability. But within the range of present knowledge, wood remains one of the most interesting of materials — and perhaps the most promising of all for the future.

Quite recently the development of improved glues, for example synthetic resins, has resulted in new plywoods that are said to have enduring structural strength and lasting moisture resistance. Plywood resists change of dimension and warping

to a great extent, is manufactured with a minimum waste of raw material, and is relatively inexpensive. It is available in a wide range of sizes, and in a wide variety of woods, showing to increased advantage the natural grain and texture of each.

Wood technology has advanced in other directions. European inventors offer metal toothed and ring connectors for timber that fit wood for truss design and offer promise for use, after suitable improvement, in the small house. Experiment with wood as aggregate for concrete is still attempted, despite many failures in the past. Costly and exotic woods in very thin films of veneer backed with cloth are available as finish in moderate price ranges. Wood pulp, long used for paper, is now made into rigid board, and, although the first fiberboards were light and relatively weak, pressed boards are now tough, thin, and really durable, certainly for inside use. Wood flour is a common base for many of the plastics that may be used, perhaps for structure as well as finish, in the house of the future.

For all these reasons the continued use of wood, both as structural and as finish material for the house, may confidently be expected.

Within the group of cementitious and cast materials may be included all those of the masonry type. Although masonry lends itself well to standardization in modern wall construction, the arch, vault, and dome — true masonry constructions for spanning walls — are scarcely feasible. However, many of the proposed systems of pre-cast concrete units have provided flooring systems also of concrete. A large variety of these systems is shown in the Supplement, most of them in whole or in part adaptable to modular design.

Masonry has certain properties that make it unsuited to economical factory manufacture. Whether the members are to be burned or cast plastic as units, it is very difficult, because of shrinkage and the rather brittle nature of all such products, to manufacture them accurately with self-keying features. This is a serious disadvantage when the keys are necessarily small. Nor are masonry units well adapted to use with automatic fea-

tures. Even when the units are made of the new lightweight ceramics and concretes, if story height or room span in length, they may be too heavy to be erected rapidly. Also, although masonry is not combustible and does not ordinarily disintegrate in the presence of moisture, it is not water-tight. As interior finish it is not entirely satisfactory without the inclusion of heat insulation, and if other finishes must be applied, the difficulty in providing automatic keying devices is again noticeable.

The strength of masonry makes it well suited to walls, but its relatively low tensile strength seriously limits its use for floors. Also, accessories and their services can be installed only with difficulty. Masonry is a very attractive material for outside surfaces, but it is broadly suited neither to integrated constructions nor to structural frames.

Under these limitations, the future of stone, brick, and concrete in the extended use of standardized materials is uncertain. Notable recent advances in masonry products are light-aggregate concrete, new ceramic tiles, glass bricks and tiles, gypsum slabs for floors, synthetic stones, and aerated ceramics. Many of the finest examples of architecture, even in modern design, have been in brick. Hollow tiles still form one of the cheapest and most satisfactory walls that can be built by conventional methods, while cinder-concrete blocks and aerated gypsum and cements all have their place in past and future construction. A recent notable advance in concrete technique has been made in the form of thin panels of mosaic concrete for house exteriors. So used, concrete is admirable; it weathers well and provides fire resistance and strength. In advanced standardized constructions, then, cementitious and masonry materials may be most appropriately used in the form of keyed-on finish panels in a wide variety of treatment.

The cementitious materials most extensively used in conventional house construction are Portland cement and gypsum. Both are used in two forms, as factory-made boards and cast in situ. Portland cement as used in situ may be applied to lath

or other grounds in the form of stucco consisting largely of a sand aggregate with cement as a binder. Stucco forms an attractive and, when properly applied, a durable exterior finish. But it requires an inherently laborious application that is expensive and not adaptable to modern manufacturing technique. As the art of manufacture of building parts progresses, it is probable that cement finishes of this type will be supplied, where desired, by means better suited to factory fabrication.

Concrete poured in place between forms is a standard method of providing foundation walls and footings. It has also been used frequently for superstructure, reinforced for floors or roof decks, or in the mass, with or without reinforcing, for walls. Used in this way, it forms a strong and durable building material. Despite the fact that it requires forms that ordinarily do not become a part of the building and introduce serious problems of cost, and despite the hand methods necessary for mixing and placing, and the difficulty of pouring in cold weather, poured concrete is a relatively cheap material for building. On the score of cost alone, concrete poured in place cannot be discarded from current building practice, though advancing technique may make it obsolete. It is, moreover, eminently satisfactory as regards strength, and fire- and weather-resistance. In the hands of a good designer its plasticity makes it an entirely suitable material for exterior finish or detail. For interiors, however, its texture is rather coarse and offends the tactile sense.

Although the thicknesses in which concrete is generally used necessarily assure some degree of heat insulation, this is inadequate in the light of current practice. Collateral materials must usually be applied to provide adequate insulation and satisfactory interior finish. Also, some degree of waterproofing must usually be applied on the site. These drawbacks, coupled with the necessity of pouring in the field — and the time required for perfect curing and for the evaporation of free moisture to permit the installation of kiln-dried wood finish — all

suggest that concrete poured in place may not adapt itself to the advancing technology of factory-made house parts.

Somewhat similar difficulties are encountered with gypsum plaster and lime plaster, which the former has largely replaced. For many years lath and plaster has been the standard finish for walls and ceilings, and finish in panel form has been generally accepted only for special purposes. Tiles are now standard for bathroom walls, and fine wood panels are used as expensive decorative finish for living and dining rooms. With these exceptions, convention clings to lath and plaster with all its disadvantages. As in the case of stucco the required field application of these materials is inherently laborious, expensive, and not adaptable to modern manufacturing methods. The moisture in fresh plaster causes serious damage to kiln-dried wood finish, if such finish is installed before the plaster has thoroughly dried. Even with heat in the house, an expense the builder of a low-cost house can seldom afford, plaster takes weeks to dry adequately. Satisfactory finishes applied without moisture would solve a long-standing and serious problem.

Gypsum and mixtures of asbestos and cement formed into rigid boards are increasingly used. Gypsum board is relatively inexpensive and comparatively free from dimensional variation; but it has little structural strength and when used as panels requires adequate backing. In many respects asbestos-cement board is superior, but it is much more expensive. It provides a brittle but very hard surface that is not unattractive for siding, and has many possibilities for inside finish as well.

Although they have offsetting disadvantages, metals as a group offer just the properties that wood lacks as an ideal material for housing. As framing and positioning material they are theoretically much more adaptable. Metals change but slightly in dimension, not at all with humidity, and only in a minor way within the temperature range of any climate. Although not fireproof, since heat destroys their strength by softening them, they are not combustible.

Some metals, such as copper and lead, are too soft, too ductile, or insufficiently strong to make good structural materials; others, like aluminum, have a rather low modulus of elasticity, making them less rigid. The dominant position of steel and its alloys may in time be challenged, but at the present time "metal frame" and "steel frame" are almost synonymous.

It is probable that for many years the load-bearing steel frame will, in this country at least, cost more than a corresponding wood frame. Not only is the base cost more, but because of the high heat conductivity of steel great care must be exercised to prevent condensation and resulting damage, and this usually results in a higher insulating cost. But for purposes of bonding, aligning, and providing a base of constant dimension in the assembly of other parts, steel and its alloys, with protective coatings, should prove invaluable in modularized structure.

For parts other than frames, the metals have varying uses in modularized structure. For flashing and the like, copper and lead will undoubtedly continue to be used as in the past, and will take advantage of the latest developments in metal technology, such as paper-thin electro-sheet copper. As finish, the metals have great beauty, and can be given a wide variety of treatment. Almost without exception, however, they are subject to moisture and air corrosion, the effects of which are seldom pleasing in appearance; and where two metals are to be used in conjunction, careful study must be given to the problem of electrolytic corrosion. Few metals are sufficiently non-corrosive in their cheaper grades to offer much promise as exterior finish. Aluminum and copper may be notable exceptions, but not even the expensive alloy steels are entirely without defects. The cheaper metals may some day be processed so as to serve exterior-finish purposes. But as yet the known processes, although effective and attractive in product, are far beyond the cost range of the small house.

For jointing, chases, and trim the sheet metals have prospective wide usefulness. Brushed and extruded aluminum for

mantels, battens, and cornices are beginning to be used freely and with good results. Copper can also be manufactured into units for trim; and there is reason to expect that lead, used so effectively by our ancestors, may again contribute to the decoration of our houses. For inside finish, there are paints of the synthetic-resin-lacquer group that will adequately protect steel plates.

To metal as an interior finish there is a conventional aversion; it is cold and hard to the touch. Many will recall the experiments of fifteen years ago with ugly metal ceilings made to look like plaster. Today designers use materials as they are, and not to simulate others. The decoration of the modern Pullman car leaves no doubt as to the attractive possibilities of painted steel interior panels, and if the cost-efficiency of such material is superior to that of other finishes its use will show marked increase. Meanwhile metals will continue to serve a whole series of collateral uses, as pipes, as conduits, in expanded form as lathing, and as reinforcing for concrete.

In recent years greater attention has been given to the economy of house heating, and as a result a group of new insulating materials has come into prominence. More recently still the introduction of air conditioning into houses has directed attention to insulation for a somewhat different purpose, that of preventing condensation. The most important function of air conditioning in the small low-cost house is that of maintaining a reasonably constant air-moisture condition by humidification during the heating season. If the warm and relatively humid inside air strikes cold surfaces, water vapor condenses and the water causes serious damage to finish, rots wood, and corrodes metal. The problem of preventing condensation is distinct from that of heating economy, and requires a different use of insulating materials.

Insulation must be located so that the heat loss is fairly evenly distributed through the entire house shell. The design and proportion of insulating materials must be governed by the excessive heat loss at certain places such as foundation sill

and roof eaves. Insulating materials are available in many forms; in boards or slabs such as cork or fiberboard, in pliable bats or blankets, or loose. A recent form of insulation consists of bright metal surfaces such as aluminum foil. These surfaces reflect a large portion of the radiant heat that strikes them, and when used in conjunction with small air spaces are efficient insulators. With the transfer of radiant heat thus reduced, the air spaces become the most efficient of all heat insulators, provided they are small enough to prevent air convection. The efficient location of air spaces to reduce heat loss and effect economy in materials offers a profitable field for the engineer.

These notes on building materials indicate the complexity of choice for the engineer. After selection among them he must determine a type of construction appropriate to his chosen materials and to his general purpose. He is designing not parts for one house but parts for a specific type of construction. All members must be so designed that by varying their over-all dimensions, always modularly, the architect may have ready means for the construction of any layout of that specific type of structure.

Under traditional methods the layout, structure, and esthetic features for each particular house have been specified by the same designer, whether architect, engineer, or builder. But for the buildings demanded by the cubical modular method, standardized parts will be designed by the engineer, and will therefore be predetermined in form and structure for the architect or house designer. Heretofore, the architect has specified layout and appearance; then the engineer or builder has dealt with practical means for their provision. In the future, and particularly under the cubical modular method, there might be a new combination of the work of these two agents. The architect could lay out the house and design its esthetic features within the same matrix of cubes as that in which the engineer has already designed its structural features.

Structural design is made within cross-sections and projections of cube groups. It deals with cross-sections, volume, in-

terrelations. Architectural design is more concerned with visible surfaces; with the layout of floors and the elevation of walls; with the proportions and disposition of openings; with texture and color of materials; with planar relations of cube groups. The cubical modular method restricts neither the architect nor the engineer. It offers a single medium of specification, and can adapt itself to requirements of materials and structure.

The practical application of the cubical modular method to the use of actual materials and the design of actual constructions involves modifications in the theory, both in the composition of parts and the dimensioning of joints. The inherent properties of materials are seldom so well adapted to the functions to be served that the elements of structure can be expressed in form, size, and location according to the functional divisions defined by axial lines and planes. And dimensioned jointing of actual materials requires clearances and tolerances suitable both to the materials used and the type of the assembly.

Traditional design normally starts by fixing the materials and layout of the exterior, the walls and roof. The interior construction is then fitted into it. In cubical modular design the focus is rather upon the inside structure, the base structure of the building designed within a matrix of cubes of structural-wall thickness. Outside finish is subservient to it, and superimposed exterior wall finish may or may not be modularized.

Practical design proceeds by selecting its materials and its appropriate structural type; by dividing the original structural matrix of cubes first into main groups and intersection groups, and then into structural and interconnection groups; and by designing all the essential parts each within the appropriate matrix thus defined. Cubical matrices are similarly defined for the design of doors, windows, and stairs, for accessories, services, and the like, as are the planar matrices for superimposed finish and other parts outside the original structural matrix. The main structural members are first tentatively

designed; then suitable interconnections are determined upon as standard for the particular construction.

The modular method necessarily involves the selection of a module. In the previous discussion, 4″ has seemed to offer more advantages for use in the United States than any other dimension. The selection of this figure was based in part on the related dimensions of building materials, and in part on the nominal thickness of the structural wall of the dominant American wood-frame type, which is defined by the nominal 2″ x 4″ stud. But, according to government standards, the actual air-dry dimension of that stud is 3⅝″, and when sized for use in a modularized structure its maximum practical dimension for wall thickness may be as little as 3½″. However, this dimension does not harmonize well with those of many other materials — wallboard, concrete tile, and the like. There is perhaps as good a reason to choose 3″ as 4″. A module of this size might require less alteration in actual lumber sizes than would 4″; and changes to a smaller instead of a larger dimension would be more readily made. Wider versatility in design would be possible with the smaller figure. With a 3″ module, floor joists in thicknesses of 6″ and 9″ would be practicable, whereas with a 4″ module a single depth of 8″ only is practicable for average construction.

Furthermore, the subdivisions (1½″ and ¾″) as well as the multiples of 3″ seem better suited than those of 4″ to present finished-lumber thicknesses and, also, to present American brick sizes and laid-in-the-wall construction. Nine inches center to center for longitudinal jointing is both more common and more feasible than 8″. The vertical height of a brick course, usually 3″ or 4½″ (4½″=1½ M, if M=3″), would equal half the length of a longitudinal brick laid in the wall and approximate the thickness of brick-veneer finish. For interior construction, 3″ walls could be provided, perhaps for both bearing and non-bearing partitions, at lower cost than a construction of 4″ bearing partitions and 2″ non-bearing. This discussion merely emphasizes what has been stated earlier, that there is

nothing magical about the 4″ module. The selection of the actual module is a matter of practical design; it is not the province of this book finally to determine its size. This must be done by cooperative action between those who make the materials and those who design and build the houses.

The design of any complete construction must include all the combinations of structural elements that would normally be required in a rectangular house. The wall and floor intersections must be considered at inside as well as at outside walls. The intersections of walls may be two-way, three-way, or four-way, and, if the structure differs for outside and inside bearing walls and for partitions, all combinations of these at intersections must be included. An outside wall corner may be convex or concave with respect to its exterior surfaces, and, if concave, either two, three, or four walls may intersect at the corner. Sill, head, and jamb must be designed for windows and for outside and inside doors. If the construction includes cellar and sloping roof, all the basic problems involved in the construction of parts or their interconnection must be listed and the details worked out. It is evident that the careful listing of all these basic problems of design involves a complete analysis of actual structure.

The first step in the work of design can be systematized, and once organized it applies without alteration to any type of construction. The analysis is best accomplished by reference to cross-sections of a typical modular layout. These cross-sections should include plans of basement, superstructure, and roof, and elevations of exterior and interior, together with vertical sections through the entire structure in both directions. Fig. 80 illustrates one of these, the plan of superstructure. Each basic feature requiring design is identified by a number and grouped as belonging to wall or floor. The major groups are wall, floor, roof, and composite. Within the group termed "composite" are included all the items relating to more than one of the first three groups; for example, the intersection of a floor and wall is composite because it involves both floor and wall details. The items within each group are numbered serially.

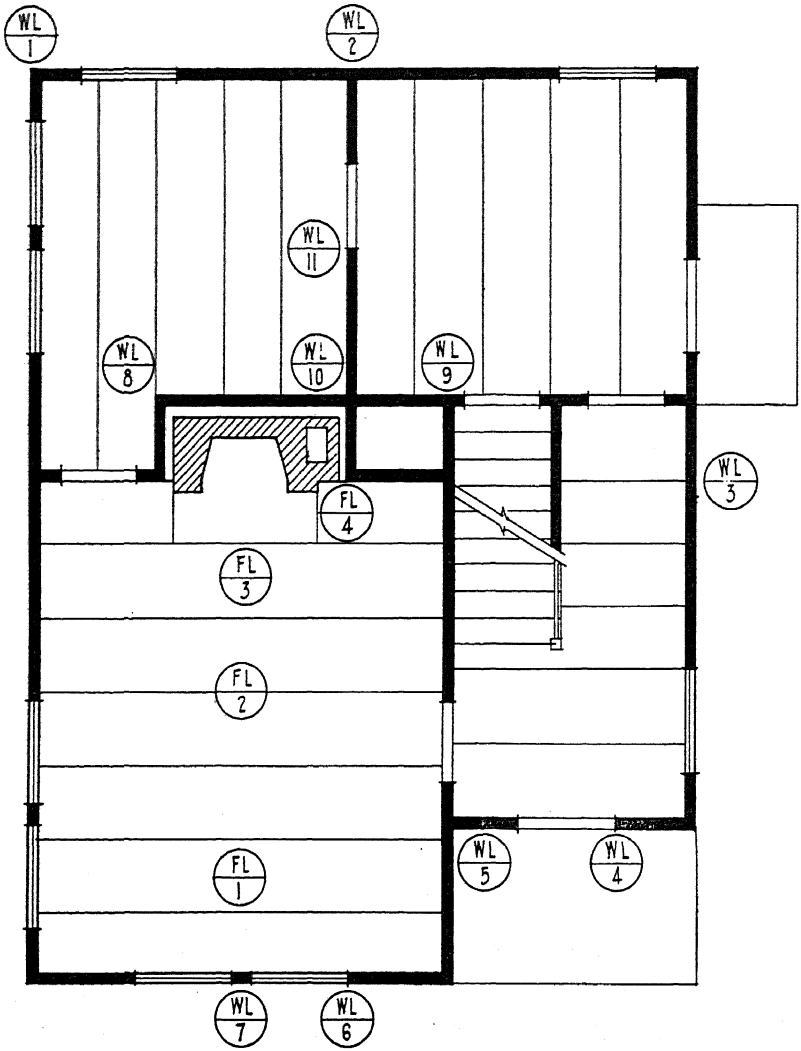

FIG. 80. ANALYSIS OF STRUCTURE—PLAN OF SUPERSTRUCTURE

The basic problems revealed in this cross-section are:

Wall:

1. Outside corner, convex
2. Outside 3-way intersection
3. Outside joint
4. Outside door jamb
5. Outside corner, concave
6. Window jamb
7. Window mullion
8. Interior 2-way intersection
9. Interior 3-way intersection
10. Interior 4-way intersection

Floor:

1. Unit or panel
2. Joint or framing
3. Opening, parallel side
4. Opening, transverse side

The design of any type of construction requires details for each of these basic features. But before proceeding to illustrate examples of actual structure, the modifications in the functional design of parts or composite members required by the nature of actual materials, and particularly the matter of clearances and tolerances, must be considered.

Although the abstract problem of jointing was considered in the previous chapter, clearances were not dealt with. In the use of actual materials in actual buildings, they must be provided. Materials cannot at present be manufactured so that no tolerances are needed, nor can they be held to their original dimensions. Clearances are necessary to take up the inaccuracies in dimension inherent in manufacturing and to allow for subsequent expansion or contraction. Although as a practical matter small clearances are preferable, the same modification of theory is required whether the clearance be one hundredth of an inch or one inch.

In Fig. 81 an area 8 M x 8 M is covered by a number of panels. The thickness of the panels is irrelevant to this particular discussion; the nominal dimensions are expressed in modules. The edges and ends of each panel are to be separated from the edges and ends of adjacent panels by a clearance $2c$; and examination will show that each panel is less than an exact number of modules wide or long by the constant $2c$. Not one of the panels is exactly modular in dimension, yet each differs in length or width from the length and width of any other panel only by an exact number of modules. Such a set of panels is said to be modular in dimension. In other words, the units of any group are modular in dimension if they differ in dimension only by multiples of the module. In some instances, this definition will need to be further qualified by the statement that the variable dimensions differ from *corresponding* variable dimensions of other units in the group only by multiples of the module. This might occur, for example, in the case of wall panels the heights of which were governed by a clearance $2c$, different from the clearance $2c_1$ that governed their widths.

Although the thickness of a finish panel may have no relation whatever to the module, the widths and lengths will vary modularly, and within the group such a thickness will be constant. The width of framing members may not have any rela-

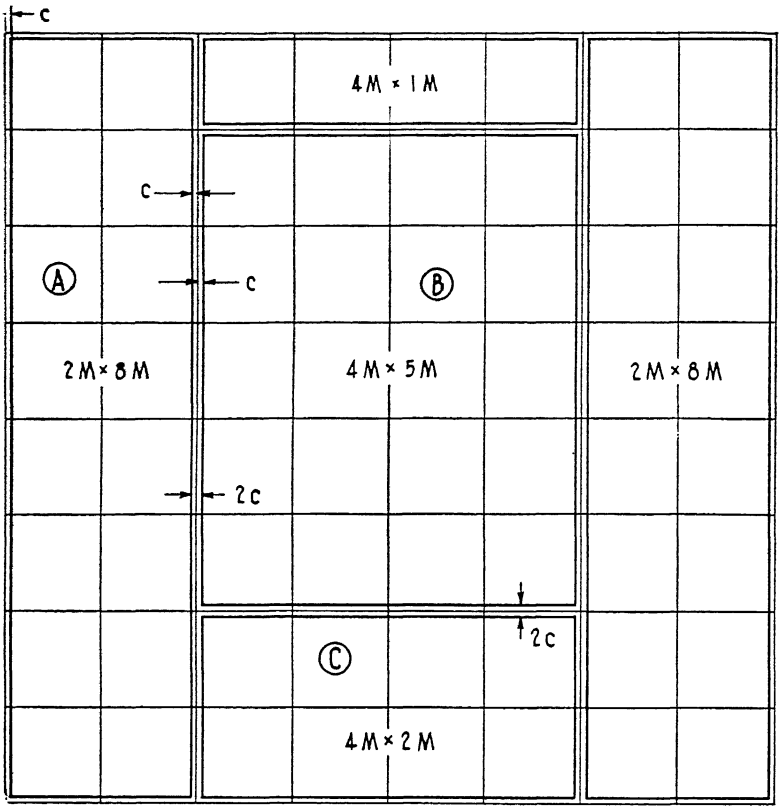

FIG. 81. A SERIES OF MODULAR PANELS
Illustrating the principle of modular dimensions with practical clearances

tion to the module, but it will be constant, while the depth or thickness will normally be of the order of one or two modules, and the length will vary modularly. Where finishes are included within the structural-wall matrix, a framing member nominally one module deep will be less than a module by the total thickness of the finishes, while a framing member nominally two

modules deep will be less than two modules by the same thickness; hence the two depths will vary modularly. In only a few units, such as masonry blocks, will all three dimensions vary modularly. But it should be remembered that within any given group the dimensions that do not vary modularly must be constant.

It must not be supposed that units of different function need have the same clearances. For example, Fig. 82 shows a vertical section of wall with two girts to which are framed studs and joists, together with enlarged views of the connection details. The clearance of the stud, c_s, should be very small, because of the desirability of a bearing connection; it might even be zero. But clearance c_j, between the end of the I-beam joist and the edge of the I-beam girt, may be quite perceptible, say $\frac{3}{8}''$. The connection details of all channel studs in this construction must, however, be the same; and the clearance c_s therefore the same. The length of all such studs may be expressed as $aM-2c_s$, where aM is the distance between girt faces and a is an integer. Similarly, the length of any joist will be $bM-2c_j$, where bM is the distance between the faces of the girt cube groups and b an integer. Hence, all studs will vary from each other in length only by exact multiples of the module, and all joist lengths will also vary only by exact multiples of the modules. But the relationship of joist length to stud length is not readily expressible except by conversion back to the module.

A similar variation in sizes occurs in the elements of composite structural members, as, for example, in Fig. 83, which shows a simple unit built up of surface elements (s) mounted on each side of a light framing (f). The surface pieces may be set back from the joint center line by a fixed amount (j) determined by the joint details, so that their lengths and widths are less than modular by twice this setback (i.e., height=dM–2c; width=bM–2j); but for various sizes of panels each dimension, length and width, will vary in multiples of M. The framing elements will probably be of uniform cross-section, with a depth across the member equal to one module less the

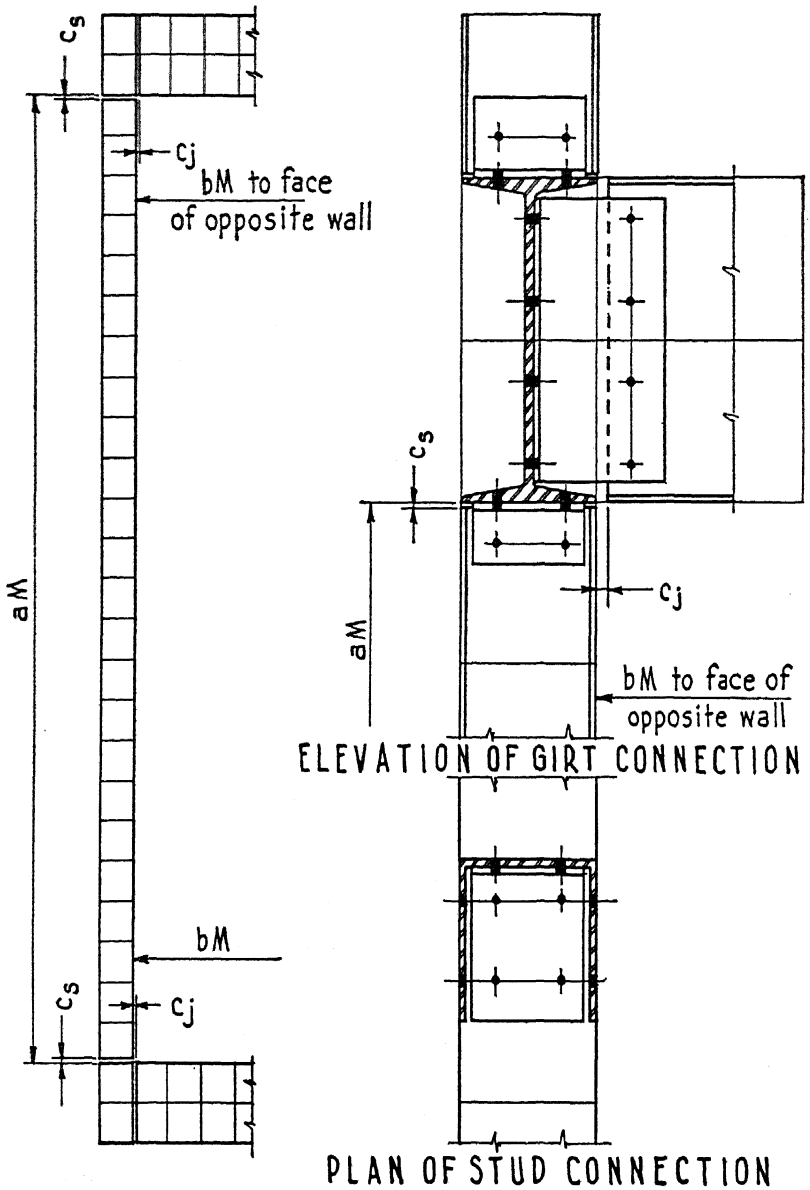

FIG. 82. MODULAR STEEL DETAILS

Illustrating the principle of modular lengths and standard end details with practical clearances

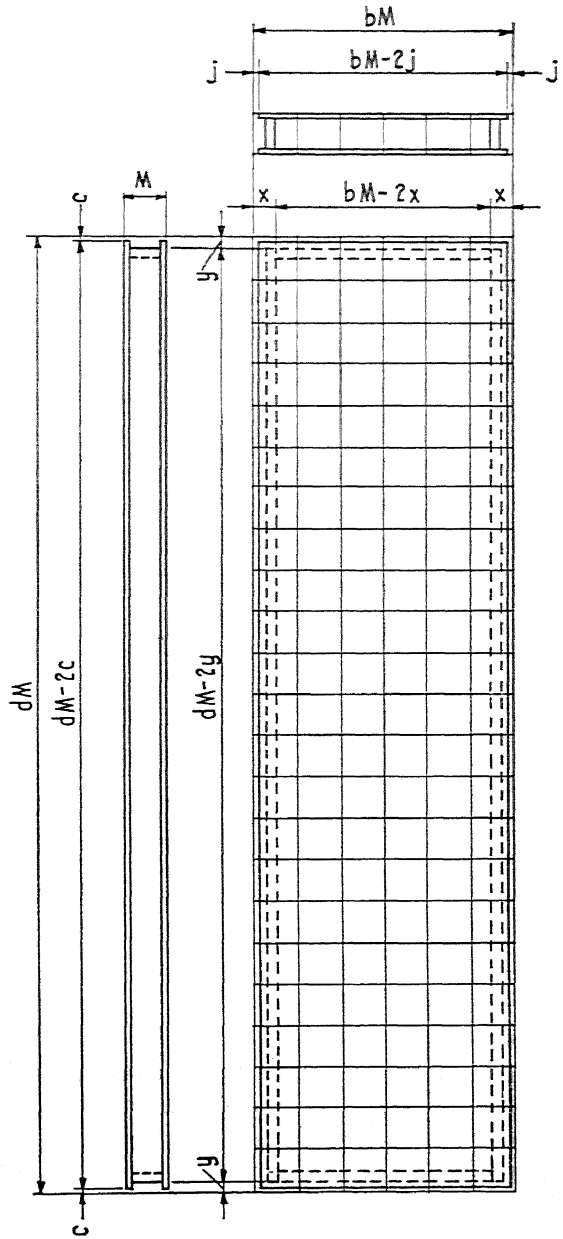

FIG. 83. CLEARANCES OF ELEMENTS WITHIN A MEMBER

Dimensions of elements vary modularly. Each is equal to a variable number of whole modules less a fixed difference or clearance

sum of the thicknesses of the two surface pieces (M–2t). Their lengths will usually be something less than the corresponding panel dimension, depending upon the details of interfitting (i.e., in this case height=dM–2y; width=bM–2x, where x > j, and y > c); but that difference will be fixed for all panel sizes and thus the lengths of similarly located pieces will always vary modularly.

Thus a fundamental principle of practical modular design is established, namely, that bearing dimensions or interconnection details for corresponding members must be identical—with the important corollary that similar parts, as manufactured for assembly in the field, will have dimensions that are either constant or that vary from corresponding dimensions of like members only by exact multiples of the module. Meanwhile, as we have seen, no part need be exactly modular in any dimension, and, once such clearances and details have been determined for use in manufacture and erection, they need not be slavishly repeated on paper by the building designer. He is at perfect liberty in almost all his work to draw the members in with fully modular dimensions.

Practical clearances are of greater importance in some structures than in others, but they must be provided to some extent in all types of construction. This practical feature is therefore included in the following demonstration of the modular design of specific types. These types are divided into four general groups: first, structural masonry; second, wood-frame construction; third, steel frame; and last, the ultimate form of house construction for mass-production methods, the integrated type of construction. Initially, the modular design of structure and finish only is shown; the treatment of doors, windows, and stairs, and the provision for accessories are dealt with later as distinct features of modular design.

Structural Masonry Constructions

The traditional type of masonry construction is not now much used for housing in this country. It is still a common type,

however, in many countries of the world, including countries of advanced economic status, such as England. There by far the largest portion of housing built in recent years has been of brick load-bearing walls, inside and out, and traditional floor construction supported directly upon the walls. The brick walls may or may not have an outside finish of stucco, and they may or may not be plastered on the inside. If plastered, the plastering is sometimes directly on the bricks, though better practice demands furring strips or light framing members to which the inside finish is attached, thus assuring air spaces and better insulation against both heat and moisture.

In masonry load-bearing types the exterior wall exerts a dominant control over all structural dimensions. Unfortunately for the purpose of modularization, measurement during construction is the only means of control over the final dimensions of finished walls. Although each joint and unit must be placed and fitted by hand, masonry units can be standardized. Bricks, tiles, cut stone, artificial stone, including concrete blocks, can all be made to accurate dimensions, but when they are laid in the wall ordinary masonry jointing necessarily involves their individual adjustment. There is nothing dimensionally definite in the interconnecting means between one brick and another, or one block and another—nothing by which modularity may be transferred. This is an obstacle to the standardization of such construction under the cubical modular system.

Another obstacle lies in the fact that a masonry wall built of standardized units, but of differing numbers of units in thickness, usually involves one less joint than the number of units used. In the case of brick, if a wall is one brick thick, there is no joint in the thickness; if two bricks, there is one joint; if three bricks, two joints, and so on. All the suggestions that have been made for the standardization of masonry constructions built of standardized units are subject to this defect. Laid-in-the-wall standardization necessarily presumes around the masonry unit a thickness of bonding material equal to a

half joint. As laid in the wall, these assumed thicknesses are only on the jointed faces.

The design of pure masonry types by the cubical modular method may, as indicated, effect partial standardization through fixing the dimensions of the units themselves. It may also partially fix the dimensions of interior floor and roof construction. But always there will be the necessity for adjustments to be made in the field in the interconnections required for the placing of wall, floor, and roof slabs, of opening units, and other features. As mentioned earlier in the book and further demonstrated later, masonry laid with the ordinary mortar joint is most consistently used in modularized constructions in the form of finish placed outside structural walls, floors, and roofs. The traditional masonry houses common throughout central and southern Europe could probably be lowered in cost and improved in living comfort without any important change in outside appearance, if the whole interior structure were of the frame or semi-panel type with brick veneer used as outside finish.

Typical masonry construction does have the cost advantage of partial integration, however, as the masonry provides both the bulk of wall structure and exterior finish as well. Whether or not this partial integration has any cost advantage over the veneer structure mentioned above is a question not pertinent to this discussion.

Another conventional type of construction very similar to structural masonry is that employing concrete poured or cast in situ. This construction is essentially frameless, the concrete with its internal reinforcings of steel supplying the structural strength and a continuous surface. Attempts have been made to employ this construction in a fully integrated form; that is, by making direct use of the concrete surfaces for both interior and exterior finishes. It is doubtful if this construction used in this way is entirely satisfactory for all climates unless special means are adopted to increase the heat-insulation efficiency of the outer

concrete walls. For the purposes of the cubical modular method, it is better to consider the poured-concrete construction as partially integrated to the extent of combining structural strength and exterior finish only.

The modular design of poured concrete is accomplished without difficulty through modularizing the system of forms for pouring. In a sense the design of reinforced concrete is a reversal of the methods incident to Case V. There the structure was designed modularly and the parts outside the matrix were placed on this structure, using the surfaces of the cube group matrices as plane modules. For the design of poured concrete the order is reversed, in that the pouring forms are first designed on the planar surfaces of the cube groups and then the structure is erected by filling in the space between these forms.

In the design of forms for pouring, numerous aligning and reinforcing pieces are required together with means for their attachment to the panels. Systems of modular forms can be designed and standardized conveniently by using the focal points for the interconnection of panels and framing members. These focal points can also determine the modular location of the protruding reinforcing rods or wood grounds required for the attaching of finish.

Standardized lengths and attachments for the reinforcing steel parts are assured by their modular positions within the structure. In this construction, structural jointing is not dimensioned, the whole structure being cast as a monolith in a manner approximating the hypothetical material of Case I. However, the equivalent of joint design is found in the means of tying together and securing in place the steel members used for reinforcing.

With wood grounds or protruding wires as means for attaching finish located in correct modular positions, finish can be applied in the form of standardized modular panels, and in this way a small degree of pre-fabrication is made available.

Poured concrete as a method of house construction is essentially a system of manufacturing the house on the site instead of in the factory. On this account it has no great significance for the cubical modular method.

Wood-frame Construction

The other principal type of traditional structure — frame construction — is better suited than masonry to cubical modular standardization, as the following demonstration will show. The wood-frame house of today is not only the predominant American type, except for fireproof city construction, but is extensively used in other countries as well, though differing perhaps in detail. The frame is load-bearing, and the construction as a whole is probably the most highly differentiated and calls for the largest degree of field fabrication. Two of the conventional types of wood frame are the balloon type and the platform. They differ considerably in their adaptability to modular design.

The balloon type is probably the less adaptable to the prefabrication of structure and finish. Studs running full structural height with horizontal ribbons let into them at second-floor level are characteristic of the system. First-floor joists rest on the sill, and second-floor joists rest upon the ribbon. Ends of the joists are nailed to the studs, side to side, so that laterally the position of one relative to the other is fixed — making centering in a common plane impracticable.

The modular layout of a balloon frame is illustrated in Fig. 84. The stud width is assumed to define M, and on that basis the joists are assumed to be 2 M in depth. The studs and joists are ½ M in their smallest dimension. Studs and joists are centered in either structural or jointing cubes. As the joists are placed against the sides of studs at outside walls, and at bearing partitions overlap side to side, they are shifted laterally a half module, from structural to jointing cube centers. In the drawing, extra studs at corners for the support of wall panels are omitted, as the finish assumed for this example is conventional

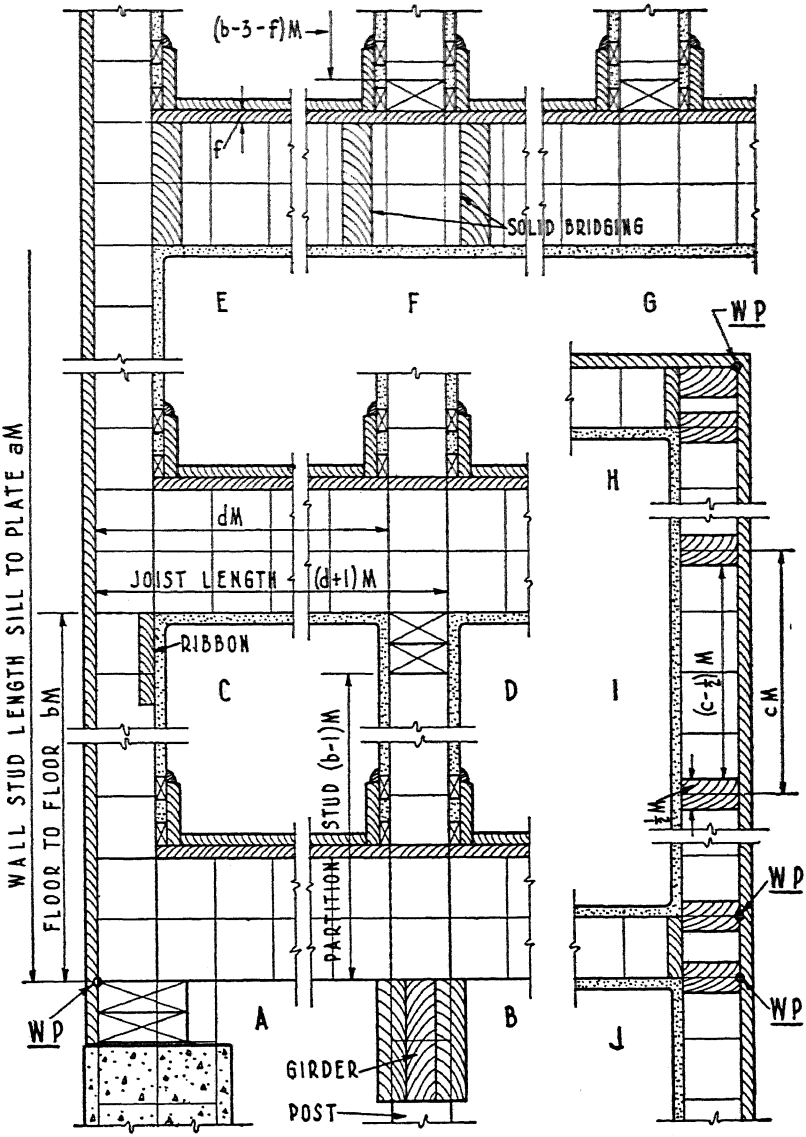

FIG. 84. MODULARIZED WOOD-FRAME CONSTRUCTION
(Balloon Type)

A, B, C, D, and G are vertical sections parallel to joists
E and F are vertical sections transverse to joists
H, I, and J are horizontal sections
B and D show bearing partitions
F and G show non-bearing partitions

lath and plaster, strip flooring, and exterior clapboard or shingle siding.

Reference to the illustration makes clear that the framing lumber may be cut so that the length variations are modular. Should the layout in plan or cross-section be different from that assumed in the illustration, stud and joist lengths would still vary by corresponding multiples of whole modules.

As conventional finishes are assumed, dimensions are not required for their location. For the framing the builder should work from a framing plan that shows the positions of members. These locations are customarily stated in terms of dimensions from working points. The subsidiary framing members are located by their center lines, and working points for modular constructions can advantageously be so taken that dimensions to these lines are always multiples of whole modules when the members have their normal modular positions. Inasmuch as the center lines of the main framing members are on cube center lines, while the joists and studs are normally centered on modular lines between cubes, the centers of the main framing members do not provide convenient working points. In the illustration, WP indicates the working points recommended for modular layouts. It will be noticed that they are taken at one of the corners of the main intersection cubes. Measured from these points the dimensions locating each stud and joist of the framing are exactly modular.

This partial application of the modular method of design to the balloon-frame construction simply reduces the number of lengths required for frame members from an indefinite quantity to a finite number — highly standardized for studs, less so for joists. The variation between members of the same class would always be a multiple of M. But if complete modularization were demanded, means for attaching finish and other parts would have to be provided at interconnection foci of the framing. In the case illustrated no provision is made for the accurate positioning of frame members, nor for a standardized method of assembly. On account of the varying dimensions of wood across

the grain as well as its tendency to warp and twist, such positioning and assembly means cannot be accurately provided. Practical modularization of the balloon type of wood frame has been limited to the standardized dimensioning of cross-sections and lengths of framing members.

In the platform type of wood framing illustrated in Fig. 85, the floor construction runs through the girt group. The wall studs and other construction abut below and above. This makes possible the lateral locating of studs and joists independently and, therefore, the centering of studs on modular divisions. For the application of modular wall finish and other parts, these studs are normally centered in the jointing cube groups, as is consistent with the theory of the preceding chapter. The dimensioning of framing members would be subject to a somewhat higher degree of standardization than in the case of the balloon type because studs are limited to story height in length. However, the same variation by multiple M, providing for different plan and sectional layouts, would be true of this type. But owing to the modular centering of studs in the platform type, the modular method would facilitate the standardization of wall finish.

Fig. 85 makes clear also that modularized finish may be readily applied to either the sill or floor structure, subject only to the special shaping or fitting of corner units to permit the necessary adjustments due to the variable dimensions of rough lumber and the cross-grain expansion and contraction of the studs as the grounds for the finish.

Cross-grain variations in the dimensions of the floor joists shift the level of the floor platform and with it the structure above, but do not disturb the fitting of finish panels. Similar variations in studs cause a lateral movement of each wall surface that would become apparent at wall corners and at the base trim. Modular corner and base trim can be designed with overlapping surfaces that conceal the effects of these variations and thus compensate for the lack of accurate modularity.

The chief advantage of the platform type of wood-frame

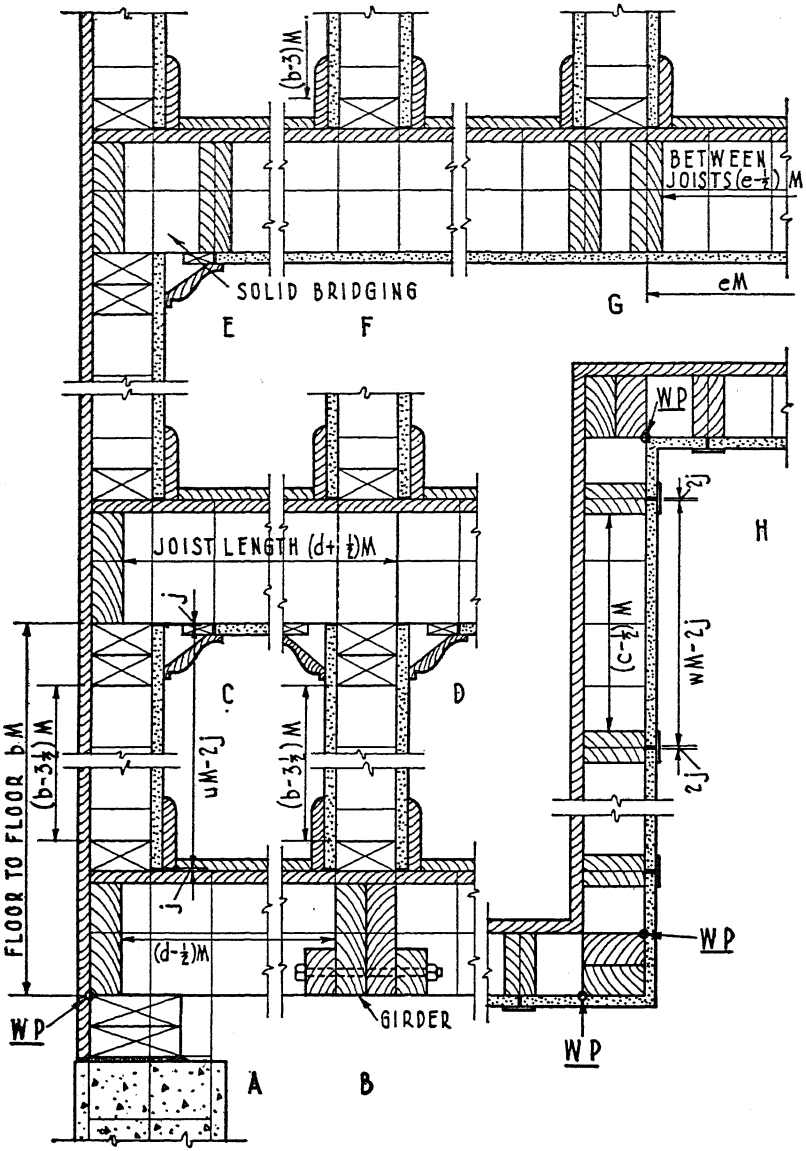

FIG. 85. MODULARIZED WOOD-FRAME CONSTRUCTION
(Platform Type)

A, C, D and F are vertical sections parallel to joists
B, E and G are vertical sections transverse to joists
H shows horizontal sections
B and D show bearing partitions
F and G show non-bearing partitions

construction under cubical modular design is that the bulk of structural parts — the main members with finish and accessory parts attached — may be so placed that cross-grain expansion and contraction will not tend to displace, crush, or rupture any important parts. At all vital points there can be harmony of action in this respect. Care should be taken to place the grain of the wood favorably in relation to the main load-bearing requirement, that is, with reference to main members only: vertically for walls and posts (between floors only), and horizontally throughout the cube matrices of floor structure and corresponding girts. In this way, by the proper centering of studs and joists and the jointing thereto of other appropriately designed parts, a static construction will result. Floor structure, including the girt members, will expand and contract in unison, without in any way disturbing the constructions above and below. Care should be taken to design any parts between stories (such as outside finish over girts), or any main constructions laid cross-grained to each other, so that the normal dimensional variations will act in harmony with material and function.

In further reference to the modular design of traditional wood-frame construction, it must be pointed out that the full advantages of a modularization of insulation and accessories, as well as finish, cannot be achieved unless the studs and joists are modularly sized and spaced with reasonable precision. Slight variations might interfere only with the sequence of orderly erection, but major deviations would require a return to the old cut-and-fit process.

The variations of lumber dimensions, therefore, sharply limit the possibility of standardization in this structural type. Moreover, in ordinary wood-frame construction there is no practical possibility of obtaining the exact spacing of framing members, since measurements are left largely to the whim or technique of the artisan. Some means are required to insure more automatic and accurate positioning of the studs and joists on modularized centering. Steel girts in part accomplish this, and certainly

serve the more important function of avoiding cross-grain bearing in the main framing members.

The foregoing analysis of the adaptability of two of the principal types of traditional construction — the masonry type and the wood-frame type — to design by the cubical modular method makes reasonably clear the assertion often repeated in the course of this book that the application of modern means to the provision of housing demands a new conception of structure, suited not only to the demand for housing but to mass-production means. For this purpose a relatively constant three-dimensional base and dimensioned jointing means are required. The typical wood-frame construction is seriously deficient in the former and masonry construction in the latter. The full specifications of modern mass-production means can, however, be definitely met through cubical modular design: either by the differentiated frame type, using a material for the frame of essentially constant dimension in all three dimensions, or by the integrated type with interconnection means of essentially constant dimension relative to the base structure of the members.

It is not the purpose of the author in the bounds of this chapter fully to set forth the application of the method even to the design of a single type, much less to a wide variety of materials and constructions. But the following pages will disclose in part the specific application of the method to these two different types, the differentiated and the integral. Neither construction may have full practical significance, though certainly that of the steel frame can supply a constant base and practical means of interconnection, and that of the integrated composite wood type the possibility of pre-fabricated small houses.

Steel-frame Construction

Elsewhere we have described the two major classes of steel frames thus far used to any extent in house construction: steel frames using rather large structural members at correspondingly wide spacings (resembling the construction used in a

skyscraper), and those using smaller members in the conventional spacings of wood framing. Each type has its advantages.

Most of the proposals for standardized steel-frame constructions have been of the small-cross-sectioned close-spaced type. When very small steel members are to be used vertically as columns or studs, the radius of gyration is low and the steel area must therefore be proportioned for a smaller compressive stress than would be possible if larger sections were used. In this respect the close-spaced steel frame tends to be less efficient than the skyscraper frame. On the other hand, the skyscraper frame with its wide spacings requires greater strength in the collateral finishing panels and restricts the flexibility of design. The small members required for close-spaced frames may be readily formed from flat sheets, already punched or otherwise provided with fastening means repetitively gauged. With the larger structural members, which must be made by the hot-rolled process, this method is impracticable.

In Fig. 86 is shown a steel construction suited to either the skyscraper or close-spaced type. It conforms closely to all the theoretical specifications of cubical modular design, and is subject to a high degree of standardization. It would be a desirable and entirely practical construction if it could be provided at competitive costs.

The repetitive punchings on the frame are gauged on a half module and are centered on the secondary foci. In practice all the holes may not have to be repeated in the manufacture of finish, the number required depending on the nature of the finish materials; but, wherever finish punchings occur, the necessary features to register accurately will always be available in the frame member. In length, frame members are multiples of whole modules, less practical clearances at the ends. To support wall, floor, and ceiling panels at two of their edges, studs are placed adjacent to posts, and joists next to the girts; but the top and bottom edges of wall panels, and the edges of floor and ceiling panels adjacent to the girts that run transverse the joists, have support only at points where they cross

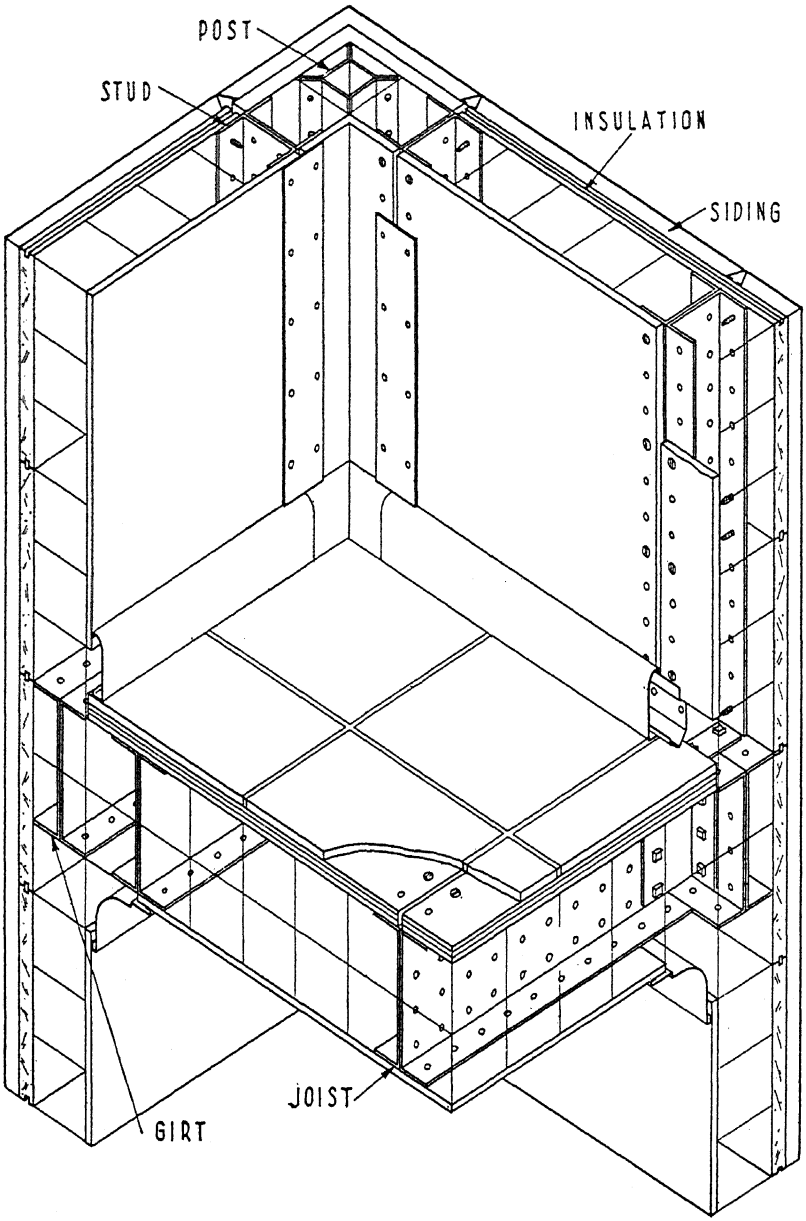

FIG. 86. STEEL-FRAME CONSTRUCTION USING SECONDARY FOCI
Frame members with symmetrical cross-sections

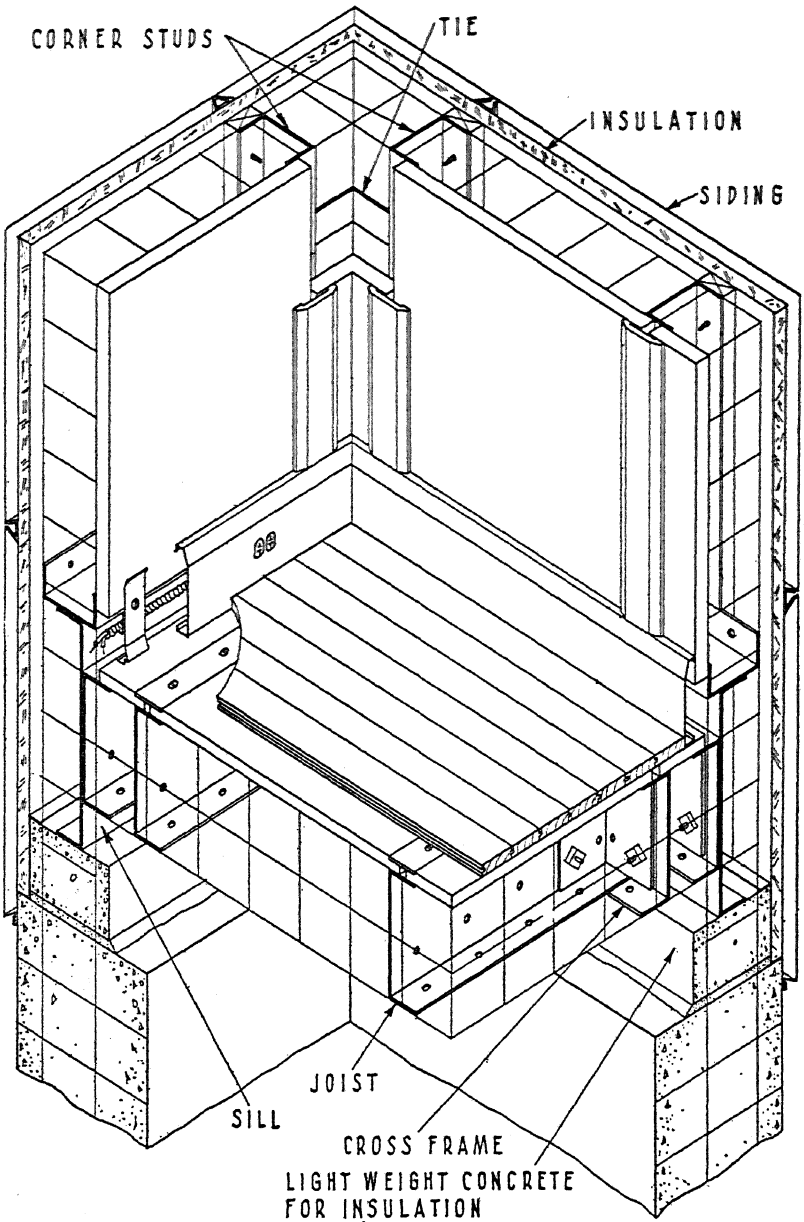

FIG. 87. STEEL-FRAME CONSTRUCTION USING PRIMARY FOCI

Frame members with unsymmetrical cross-sections and center punchings

subsidiary frame members. These edges are sufficiently protected by the base and cornice trim.

The steel frame of Fig. 86 employed only members of symmetrical cross-section, I-beams, H-studs, and special cross-shaped posts. As the webs occur at stud and joist centers, center punchings on an M gauge could not be used. Fig. 87 shows another variation of close-spaced steel frame in which the center punchings are on an M gauge, using the primary foci and thus reducing the number of punchings required.

Details of this construction are shown in Fig. 88. The entire framing is formed from channels with ½ M flanges and four different depths of section. Two standard angles perform the interconnection of all framing members. The design provides a modular length variation for all studs and joists and their cross-framing members, all lengths being a number of whole modules less half a module. Studs and joists are centered in jointing cube groups, and girts in structural cube groups. Posts are replaced by brackets that connect the studs positioned one module from corners.

Punchings are repeated on a whole-module gauge, a design that requires all finish panels to be attached through the center of the joint by some continuous strip such as a stile, batten, or parting strip. Examples of this are shown in details A and B. In Fig. 87 the isometric view of the same construction shows more clearly the application of finish. The exterior wall finish is attached to wood grounds through a layer of insulation. The floor cross-framing, inserted between joists near the outside wall, and providing grounds for all edges of the under-floor and ceiling panels, may be omitted where the attachment of these panels at joist points is sufficient.

It is quite within the accuracy of modern metal-working methods to produce framing parts that fit together with punched angle connectors, bolts and nuts, so that the structure is self-aligning and exactly modular. No skill is required to tighten bolts and nuts with a wrench. The application of finish is as simple as the erection of the structure; the exact locations

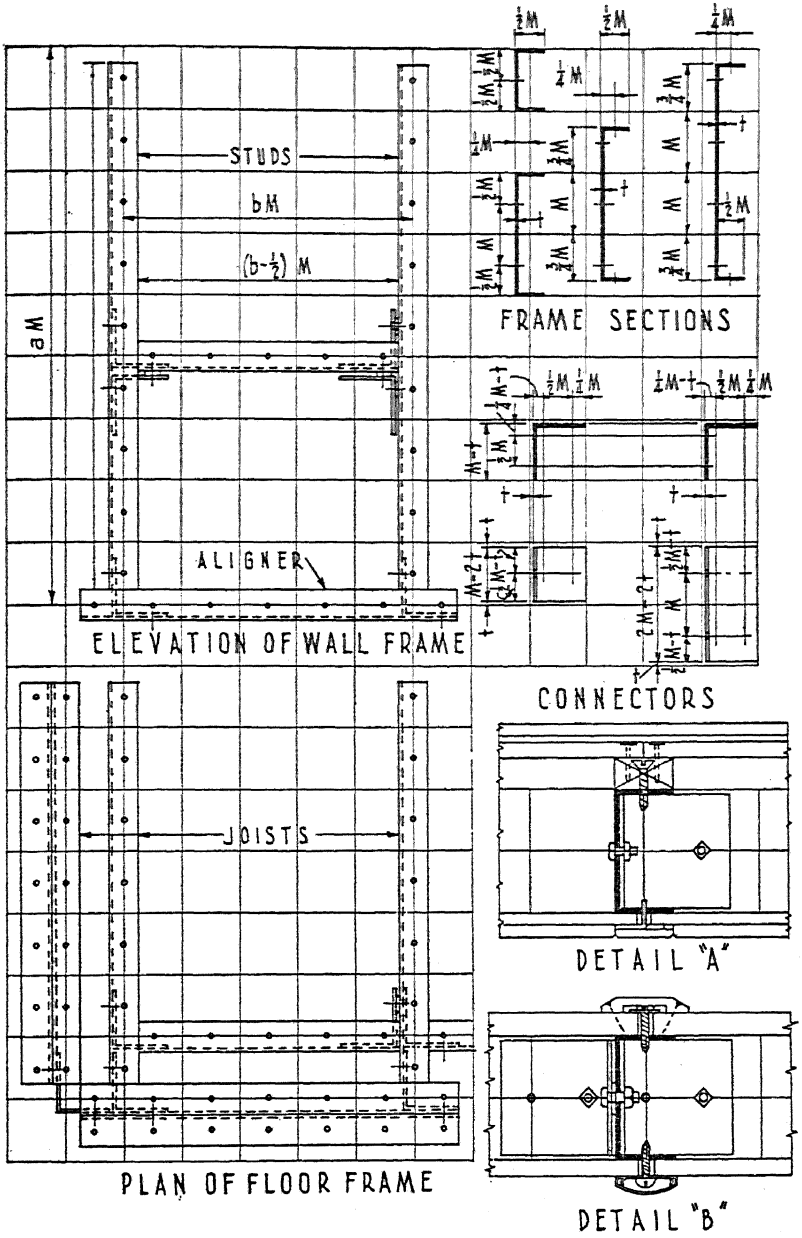

FIG. 88. DETAILS OF CONSTRUCTION OF FIG. 87

Details "A" and "B" illustrate different methods of attaching finish

for fastening means are marked both on the frame and on the finish; the fastening is accomplished by simple devices such as screws or keys.

Integrated Construction

In contrast to the traditional hand processes of masonry and particularly of frame construction performed in the field, the cubical modular method transfers to the shop practically all the work of shaping and finishing the separate parts, whether structure, finish, or insulation, required in the erection of such highly differentiated types. The assembly of these parts is still done in the field, but it is done more easily and quickly, almost automatically. In any kind of differentiated construction, however, the final assembly must still be accomplished piece by piece in the field, and any finish that cannot practically be applied in the shop, particularly that incident to completion, must be done on the site.

Integrated construction is the logical goal of cubical modular design; a construction of composite pre-finished parts, each fulfilling all the functions that are incident to its position in wall, floor, roof, or their intersections, excepting only the means for their connection on the site. The joining of pieces and the further finishing made necessary thereby, processes that differentiated construction assigns to hand work in the field, are done in the shop, under conditions better suited not only to effect savings in both labor and material but to produce a more dependable product.

Cubical modular design is founded on the two essential specifications for the orderly mass production of parts for automatic field assembly — initial uniform cross-section and repetitive means for interrelated assembly gauged by the module along three main axes. Individual pieces are made in the mill and shop to these specifications, whether for frame or integrated constructions. But for the latter most of the assembly is done in the shop, taking advantage of jigs and other automatic means for positive control and continuous flow. The same properties

provide ready means for pre-finishing as well as pre-fabricating. And the same properties in interconnection pieces automatically transfer modularity from one piece throughout a composite shop assembly, as well as from one composite member throughout an entire field assembly.

Integrated structure achieves further saving through economies in the use of materials. In framed constructions, the frame alone usually provides all the necessary structural strength. Finish panels supply suitable finish surfaces, weather protection, and durability; but instead of furnishing structural strength they usually increase the dead load to be supported by the frame. The materials used for insulation usually contribute neither to strength nor finish. There is obvious economy in so selecting and using materials that each contributes a maximum of usefulness to the construction. Integrated construction makes this possible. In the development of stressed panels the airplane industry, in which the reduction of weight by the economical use of materials is of paramount importance, has shown the housing industry how it may effectively utilize this well known but little used structural principle. It typifies in physical form the sort of economy often referred to in this book — the combining of structure with finish. If surface panels are securely bonded to the framing by welding, cementing, or riveting, stresses in the framing are transferred to the panels. The panels then reinforce the frame and add substantially to the strength and rigidity of the structure. Integrated construction should take advantage of this principle by welding finish panels of sheet steel, for instance, to steel framing members, or by forming panel and framing from the same sheet, or by gluing plywood to wood members that replace studs and joists.

The full integration of single-wall framed construction results in units of several different types. There are at least three different wall units and two distinct horizontal units, one for floors and one for flat roofs. Units for openings and other practical features are here not considered in the question of structural types. Walls may be either outside load-bearing, inside

load-bearing, or partition. Floor units may include both finish floor and ceiling, or, as in the ground floor, the ceiling finish may not be required. Floor units may include ceiling on the under side and roofing on top for flat roof constructions.

These various broad functions of house construction may be combined or integrated in several different combinations. One method is shown in Fig. 74 of Case V, p. 181. In this construction there are two types of wall units, inside and outside, and two types of floor or horizontal units, floor and ceiling, and roof and ceiling. As regards structural strength, the inside walls carry the floor loads, while the outside walls support the roof load and resist wind pressure. With only four types of integrated wall and floor units, this construction offers a high degree of standardization. The complete separation of inside and outside walls makes possible the design of each solely to fulfill its differentiated functions, as well as the inclusion in the inner wall units of standardized conduits, grounds, and accessories. The economy of standardized design for all inside walls may be offset in part by the necessity of including in non-bearing partition units the structural strength required for the bearing walls. In practical application this differentiated wall construction (with or without differentiated roof and ceiling) may or may not prove economical, but it does offer alluring advantages in standardization as well as high efficiency of heat insulation.

In double-wall construction, greater economy may result from tying the inner and outer wall construction together in such a manner as to obtain the advantages of each, including the insulating advantages of the combination and at the same time the combined total of the two in load-carrying and wind-bracing capacity. Indeed, if the materials used permit union of the two, with the space between trussed, the integrated wall construction of either the outer or inner wall (or both) might be substantially less than required without such interconnection.

The logical shop organization of integrated constructions would involve two processes. These would differentiate the basic functions always to be performed by a member from special

functions required only under certain conditions or in different degrees. Strength, surfacing, jointing means, durability, are basic functions. Special functions include finish, such as exterior or interior weather protection, insulation, molding, chases, accessory features. Initially, members would be manufactured to fulfill only the basic functions; this would naturally involve the highest degree of mass production for that particular type of member. Subsequent processes would provide base members with the special features suited to particular locations in the structure and the conception of the architect.

Completely integrated construction represents the highest type of standardization from the viewpoint of field erection. Stressed plywood panel construction, which involves no problems as to condensation and insulation, may well serve as an illustration, as in Fig. 89. Both floor and wall units are made of plywood glued to wood frames consisting of long rails connected by cross pieces at the ends and at intermediate points spaced modularly along the length. The platform type of construction is selected for this exposition. The interior partitions are located by half splines attached to the surfaces of floors, ceilings, and inner sides of the outside walls. The half splines placed on the floors are notched modularly, as shown in the illustration, to receive the ends of the splines at the vertical joints and thus locate all wall units accurately and modularly. Base and cornice molds and corner chases are used for wiring and piping installations.

This construction illustrates the design of wall units in matrices of structural cubes and of floor units in jointing cubes. This permits wall joints to be centered on modular lines, while floor joints are centered on cube center lines. Partitions all follow lines of structural cubes. The boundaries of jointing cubes are not shown on the drawing. If for esthetic reasons it is desirable to have wall joints and floor joints in exact alignment, it is quite possible to design wall structure with joint cube groups as matrices for the units and with posts extended correspondingly ½ M into each wall. This permits the wall joints,

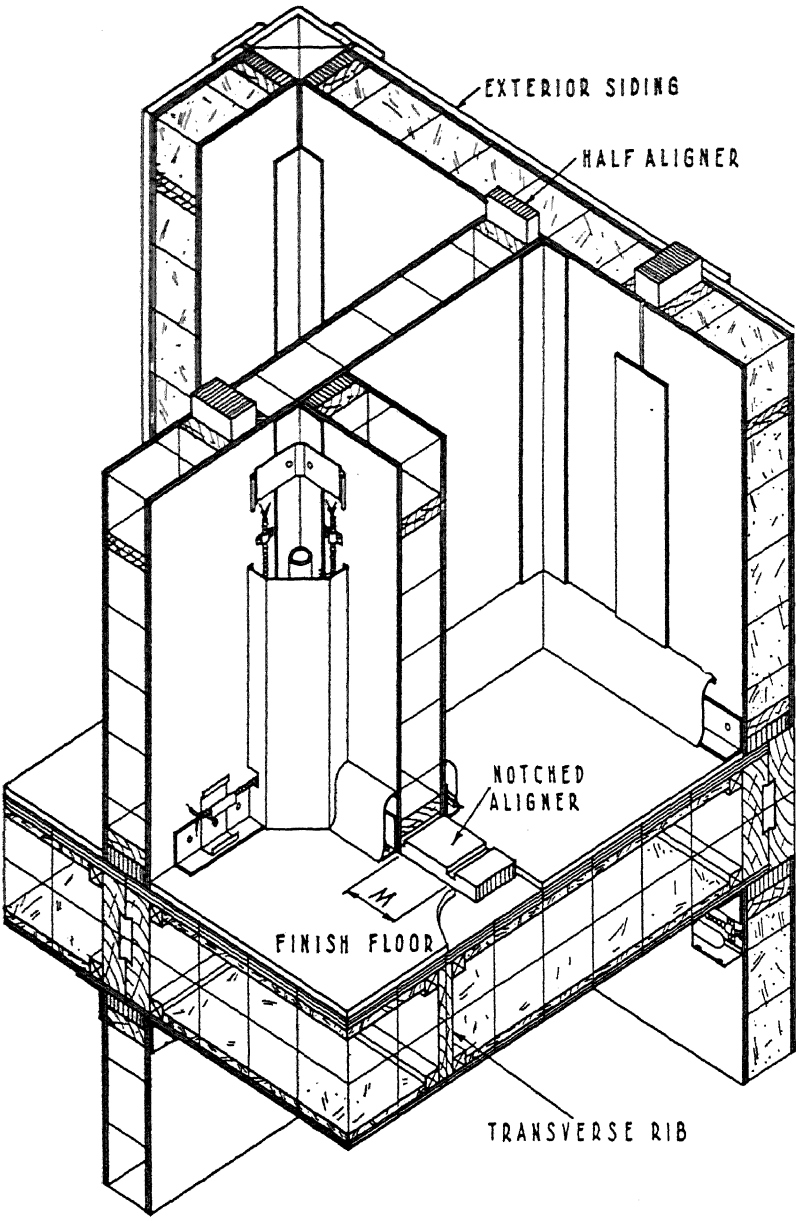

FIG. 89. INTEGRATED CONSTRUCTION

The notched aligners are attached to the floor at frame or cross-frame points, modularly located

as well as the floor joints, to be centered on the center lines of structural cubes. The girt at outside walls consists merely of a bonding beam, a half module thick, and the half aligners placed above and below the floor matrix. These pieces are continuous so that they tie floor units together and form a strong structural interconnection between the floor platform and the walls above and below. The design conforms strictly to theoretical modular design, as the normal intersection cubes are here part of the floor matrix and the parts that function as girt are designed within jointing cubes.

For the integrated construction illustrated, wood in association with plywood is used in such a way that normal swelling and shrinking across the grain does not destroy the essential modular positioning of the members except as previously described for platform wood-frame construction. The change of dimension in plywood, approximately one-tenth that of solid wood, is negligible in the design of this structure. The greatest change in dimension will occur in the framing members of the floor units. As these members swell and shrink, the whole floor construction will move correspondingly up and down, uniformly shifting the entire structure above it. This movement will have no effect on the finish elements nor on the relative positions of the interfitted wall units. The half splines used horizontally as wall aligners and partition sole pieces may change slightly in thickness, but this will not affect the structure, as the movement will be practically negligible and can be concealed by the base trim. These aligners will not change in length, and hence the grooves, spaced M apart, will afford permanently accurate means for modularly locating wall units and their vertical joints. The fundamental three-dimensional base of the structure is provided for two of these dimensions by the horizontal aligners, and for the third dimension by the vertical wall aligners. Horizontally, floor and girt constructions are virtually constant in modular dimension, and the wall constructions held therebetween are equally constant in their vertical modular dimensions.

While there are several important practical questions about this construction still to be proved by experience, notably the permanence of the structural glued joints, it affords a simple illustration of the high degree of modularization and standardization that is possible with integrated, pre-fabricated, pre-finished members. Whether or not this particular construction may have a broad usefulness in housing the populace, it very nicely illustrates integrated structure and a way to design low-cost housing.

Windows and Doors

Nothing has yet been said regarding the modular design of windows and doors, but it has been shown that the openings in the structure into which they fit are represented by negative groups of structural cubes. These openings locate in the structure each window and door, and define its maximum dimensions. The actual clear space available for design of the actual practical windows within these openings will differ for different types of construction. For example, in frame construction the physical parts bounding the openings are frame members, vertical studs and horizontal headers. As these are usually centered in jointing cube groups, half the width of the frame members will extend into the theoretical negative cube group. In integrated types, however, or in any other constructions that provide structure in panel form or in sections, openings are framed within structural units and the surfaces bounding the openings fall on the jointing cube centers, less a possible clearance required by practical design. The modular details between the window or door and the structure will differ slightly for different types of construction; but for any given construction this jointing will be the same as the jointing in the rest of the wall structure. Moreover, as will be seen by examination of Figs. 90–93, the same general principles are applied to the design of the sash, and in either case it will fit within the negative cube groups.

Figs. 90 and 91 illustrate a frame construction in which the

stud extends into the theoretical negative cube group, all the way around the opening, by one-half its width. In view of the nature of window details it is not possible to make the sash come

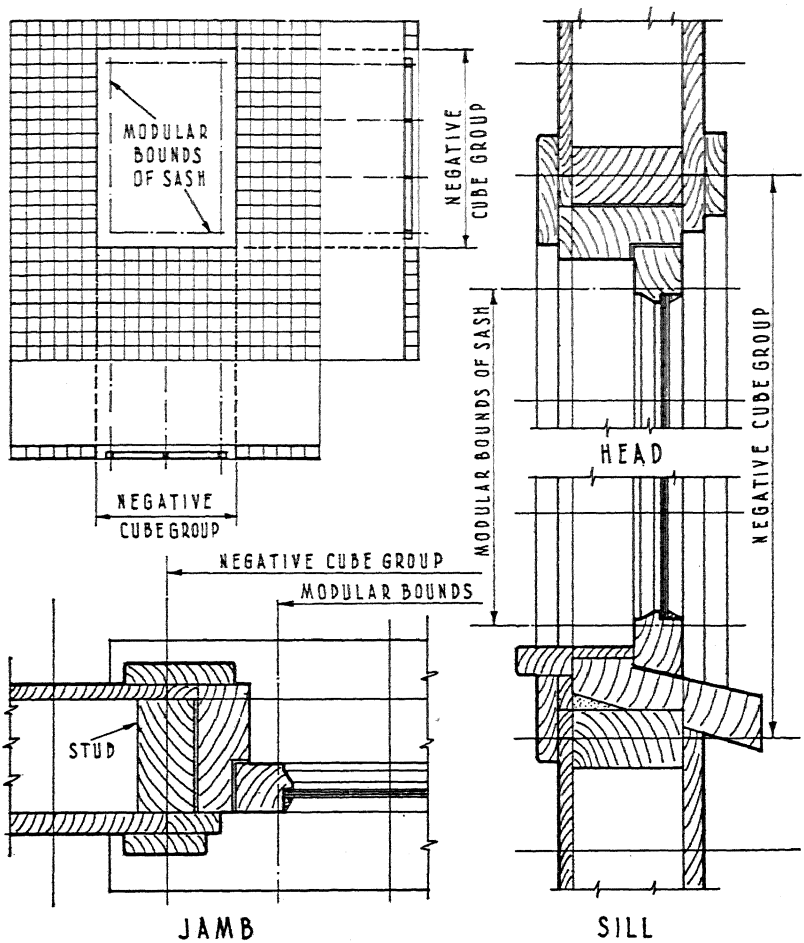

FIG. 90. CASEMENT WINDOW IN FRAMED STRUCTURE
Modular bounds of sash are on lines between structural cubes

directly up to the faces of the studding. Between those faces and the actual sash, adequate framing parts for the sash, in the form of sill, head, and jamb, must be interposed. The sash, how-

ever, will be designed on a modular basis, and for this purpose modular bounds for the sash are chosen and defined within the negative cube group. These modular bounds must fall exactly

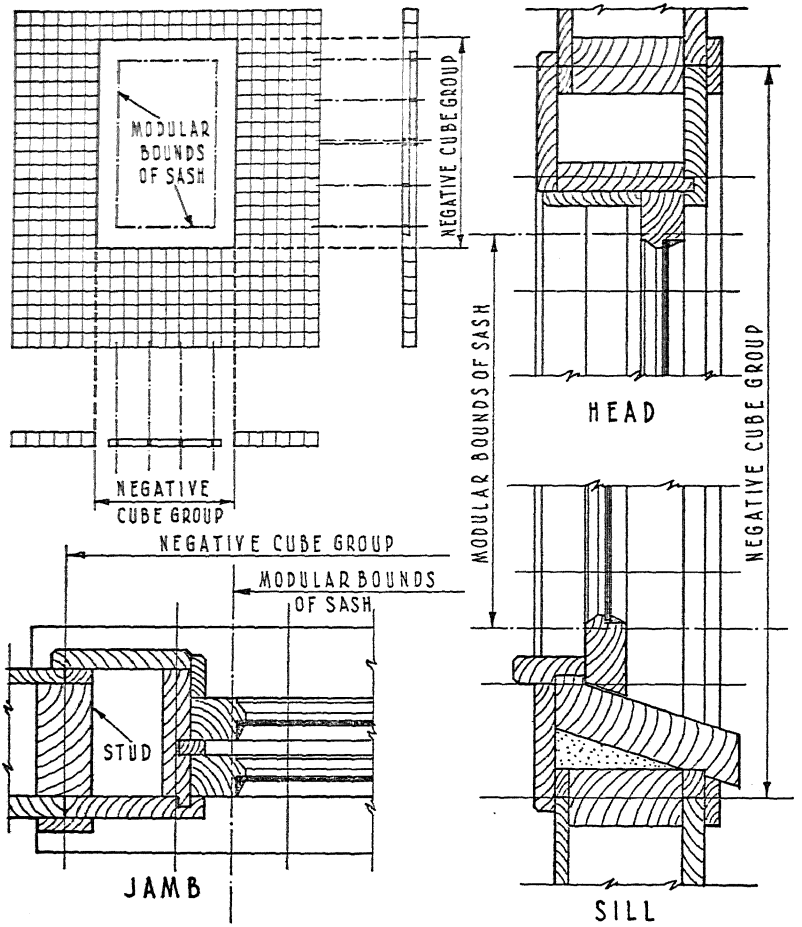

FIG. 91. DOUBLE-HUNG WINDOW IN FRAMED STRUCTURE
Modular bounds of sash are on lines between jointing cubes

on modular lines; that is, exactly in the plane of division between either the structural cubes or the jointing cubes. Figs. 90 and 92 show the modular bounds falling on the plane of division between the structural cubes; Figs. 91 and 93, the modu-

lar bounds falling on the plane of division between the jointing cubes. Moreover, these bounds define the sash, and the actual glass will begin at a distance inside these bounds equal to one-half the thickness of the standard muntin adopted.[1]

On such a basis it is possible to design adequate framing details for a window that will fit within the theoretical negative cube group, that will provide within such a cube group a set of modular boundaries (which have been referred to above as the modular bounds of the sash), and that will exactly define that sash in terms of full modules. Having selected the modular bounds of the sash either on the structural cube lines or on the jointing cube lines, as seems most suitable to the fenestration itself and to the particular structure, the rest of the parts between the modular bounds (that is, muntins, mullions, meeting rails) may be freely designed. In Figs. 90–93, modular bounds for sash have been chosen as falling on one or the other of the two permissible planes, depending upon the detail of the window illustrated. Under the strictest modularity, the division of the sash (that is, the modular dimension between the modular bounds) would be such as to cause the muntins to be centered on corresponding modular lines; but it may often happen that such complete application of modular theory — which will incidentally permit complete standardization not only of sash and frames and muntins but also of the glass — will result in windows that do not please the designer. But whether such complete modularity, with its increased economy, is adopted or whether the sash is divided into glass panes more in accord with the architect's wishes or available glass sizes, this division is unimportant. The chief modularization of windows has been achieved when the modular bounds have been defined within the negative cube group, and they may fall either on jointing cube lines or struc-

[1] It has been assumed that frame members are centered in jointing cubes and that in integrated constructions the surfaces defining rough openings are on modular planes between structural cubes. The cubical modular method provides the alternative of designing structure with structural and jointing cubes reversed. Inasmuch as the modular bounds of the sash may be located on modular lines of either structural or jointing cubes, the above discussion applies equally to either arrangement of structure.

tural cube lines, according to the type of window and the type of structure with which the designer is working.

Figs. 92 and 93 illustrate exactly similar results for a panel type of construction. It will be observed that to produce the same size of finished window a slightly wider negative cube group opening is generally required for the panel construction than for the frame construction. As a rule this might be of the order of one module. In any event, as in frame construction, modular bounds are chosen within the negative cube group and, according to the demands of the panel and of the window details, are placed either on the joint cube lines or the structural cube lines.

The design of modular doors and door frames follows these same principles. The modular bounds of the door, arrived at in exactly the same manner as the modular bounds for the sash, will fall at the faces of the jamb and head sections. The number of different door sizes required is relatively small, and they can be designed in a few standards that will meet all requirements. If the architect desires special treatment in the surface of the door panels, he can specify them without any greater departure from standards than exists today. But their outside and framing dimensions should always follow the standardized modular practice.

Stairs

Under a 4″ module, the proportions of stair riser to tread that are accepted as comfortable in this country can be used in strict cubical modular design only in a very limited way. The accepted relationship for comfort is that the sum of the width of the tread and twice the height of the riser should fall between 23″ and 25″ when the risers are less than 7½″. With a 4″ module, the only two possible combinations using full modules are: riser 4″, tread 16″, too shallow and requiring too much horizontal space to be useful; and riser 8″, tread 8″, a 45-degree stair, too steep perhaps for comfort, but a distinct possibility and found to some extent in practice. The

distance from finished floor to finished floor would in any case be exactly modular, as would the area occupied in plan by the

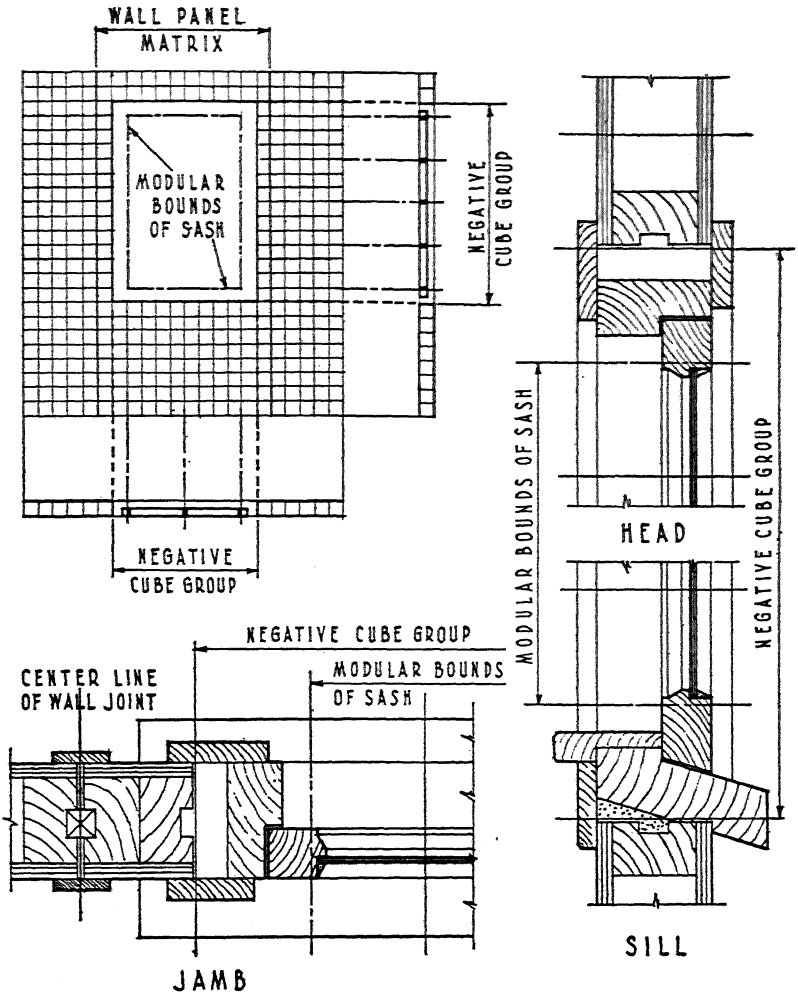

FIG. 92. CASEMENT WINDOW IN INTEGRATED STRUCTURE
Modular bounds of sash are on lines between structural cubes

stair unit. This automatically would provide a limited number of usual story-height distances to be spanned by the stair unit and likewise to fit in modularly on the plan. A single type of

such a modularized stair of two or three different modular widths would provide for all buildings with stories of integral modular heights. The stairs would fit in perfectly. Convenient

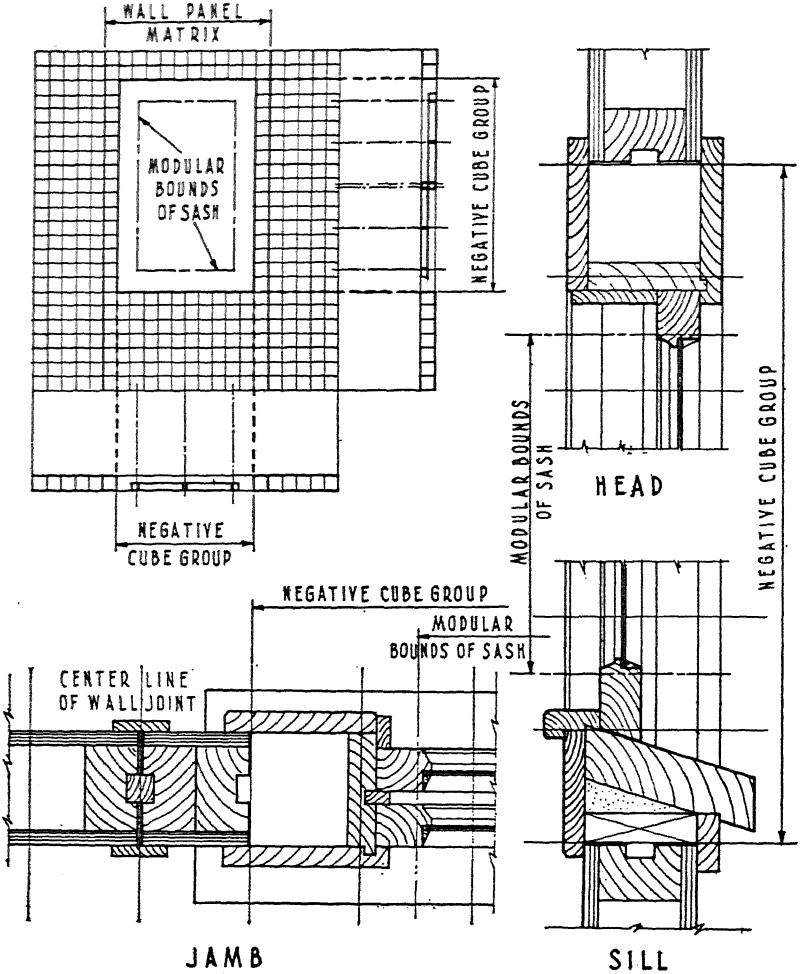

FIG. 93. DOUBLE-HUNG WINDOW IN INTEGRATED STRUCTURE
Modular bounds of sash are on lines between jointing cubes

story heights for this relationship would be 7′–4″, 8′–0″, 8′–8″, etc., plus the thickness of the structural floor, usually 2 M.

A modular relationship between the risers and treads of stairs and the height of stories is desirable in modular design, but it is not a highly important factor. It should certainly not influence decision against an otherwise less costly layout of the building. For the great bulk of housing construction, even including the special types required by widely different climates, a relatively small number of story heights would be required, varying by modular differences from, perhaps, 7′–4″ to 9′–0″. For all these story heights, modular horizontal distances appropriate to the modular story height could be selected so that the slopes of the stair unit suitable to the various story heights would remain the same. Stairs could then be standardized, appropriate to each slope and story height, and not only defining risers and treads but the interconnections of the stair units, top and bottom. The following table gives the comparative figures for the four story heights, floor to floor, from 8′–0″ to 9′–0″, inclusive:

Height of stair	8′–0″	8′–4″	8′–8″	9′–0″
Number of risers	13	14	14	15
Number of treads	12	13	13	14
Modular height	24 M	25 M	26 M	27 M
Modular length	30 M	33 M	33 M	35 M
Slope of unit	0.80	0.76	0.79	0.77

Accessories and Services

Modular design should provide for accessories and services, both by including within the structure standardized installations of wiring, piping, and outlets, and by providing, as far as possible, convenient spaces and modularly disposed connections within the house for all auxiliary equipment.

Further standardization would result from modular lengths and connections for pipes and wires, and the provision at standard intervals, in frames and collaborating materials, of holes for the passage of wires and pipes from space to space and for their outlets into rooms. Also, framing members could be sent to the site with servicing means attached; but, inasmuch as

such means would not be required on every stud or joist, special studs or joists might be provided for special positions in the building. This procedure might better be reserved for a type of construction where the modularization was in other respects more complete; that is, integrated construction. Integrated construction provides an opportunity for still further standardization of accessories and services. They may be logically incorporated within integrated members, either of standard construction or of special design, that simultaneously constitute structural parts of the building, including interconnection, and include the accessory function in question.

Accessories themselves, such as oil burners, stoves, sinks, tubs, washbowls, etc., need not be dimensionally modular, but in so far as they vary in style or particularly in dimension the variation should be relative to the variations in the modular structure in which they are to be placed. If the accessory in question is to be fastened to a wall or floor, whether structure or finish, the bases or other areas of contact should preferably be modular so that the means of attachment may register.

The normal places in any structure for the installation or incorporation of services — piping, wiring, and even lighting and heating fixtures — are at the intersections of the main members: namely, horizontally between walls and floors, and vertically at wall intersections. In panel types of construction, the logical places for minor services or their extensions are found along panel intersections. Normally there would be some measure of integration between the elements of interconnection and the covering of the services with chases or cornices; also, in a limited way the integration would include lighting and heating equipment.

Layout

The layout of particular houses according to the cubical modular method is more a matter of architectural than of structural design; but problems of layout illustrate certain general features of design, and for this reason it is appropriate to in-

clude here a brief discussion of their mechanical aspects. The esthetic aspects of layout can then be dealt with independently.

The designer — engineer, architect, or builder — may well begin by sketching plans and elevations on cross-section paper, the squares of which represent modules. It is convenient to use at least three scales, one rather small for the entire layout, one of middle size for detailed plans, and one quite large for study of details. He can thus make studies in short order, with all the freedom of sketching, yet the major dimensions of his design will be controlled by the module. During this stage of the work he need not be concerned with exact detail; he may make walls one module thick, neglecting for the moment the question of whether the finish is to be within or without the structural cube group; similarly, he may make floors the required number of modules thick (usually two); he may lay out openings, such as windows and doors, in the rough so that all their defining edges fall on modular lines. All walls, all floors, all openings will thus be separated from similar parts by an exact number of modules. Such a study appears in Fig. 94.

It is the present convention in design to make similar rough sketches; but then follows the task, often arduous, of transferring these into measured drawings that provide for the incorporation of windows, doors, wallboards, laths, and tiles, in sizes that are commercially available. This task almost always requires compromises with the original design, adjustments often difficult and disappointing to make. Brick dimensions, particularly, offer such difficulties in the transition from the free to the accurate drawings as radically to modify minor features of the plan, such as the size or location of closets or stairs. Even with the more flexible dimensions of wood, the designer must cope with the sizes of materials as they are available in commerce. As he fits these into his sketched idea, he often finds proportions and positions changing to an astounding degree.

Modular design, while amazingly flexible, is not entirely free from the necessity of such compromises, yet as the designer

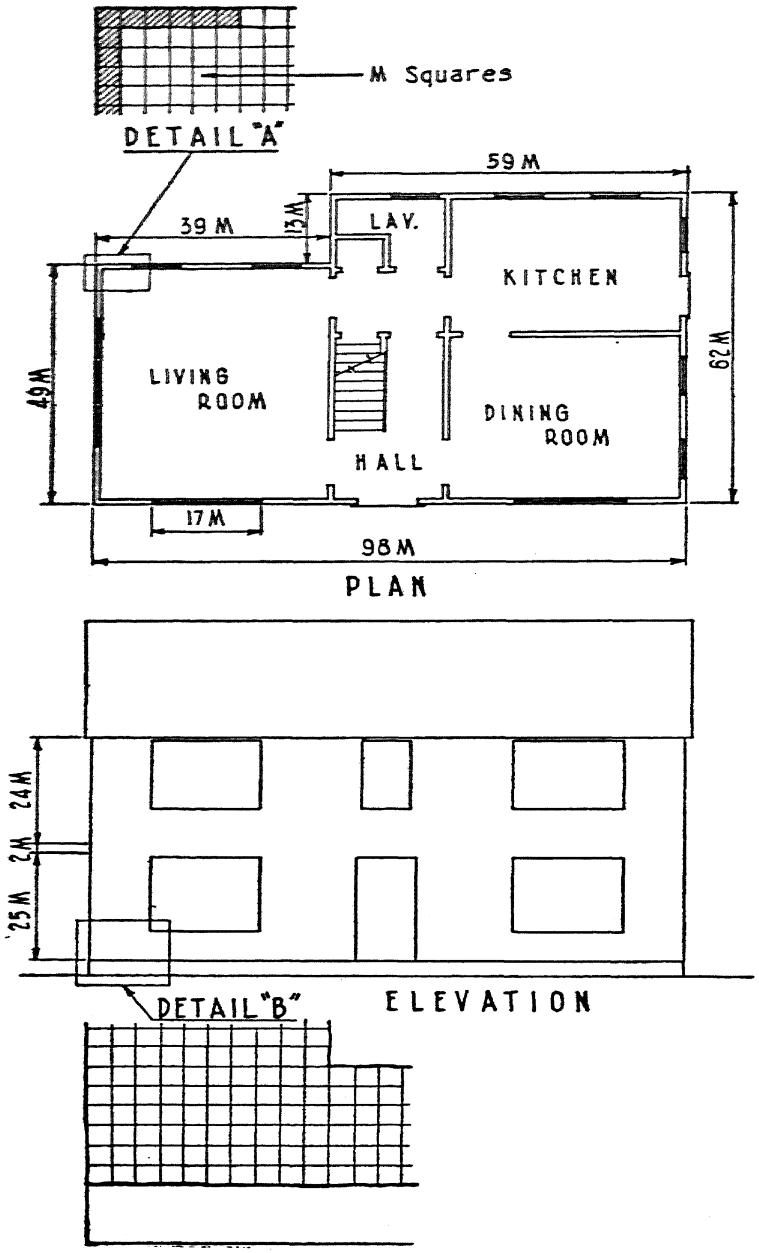

FIG. 94. PRELIMINARY SKETCH OF MODULAR HOUSE
Insets show how modularly ruled lines are used for the sketches

becomes familiar with its principles he is able to anticipate in the rough sketch most, if not all, such adjustments. The changes required are simpler and fewer than those usual in conventional practice, but they may not be ignored. Adjustments have to do with the centering of openings, particularly to meet demands for symmetry, and with stair and roof details (if the roof is pitched). The practical design of pitched roofs is a complex subject, beyond the scope of this exposition, although the broad approach has been indicated in Chapter VI. The modular design of stairs has already been discussed. The symmetrical placing of openings involves a practical problem of design as well as esthetic considerations.

The abstract problem of symmetrical location or centering of openings may be better understood by reference to Fig. 95. This supposes that a window 6 M wide is to be centered in a wall space 15 M wide. The centering results in wall dimensions 4½ M wide either side of the window, which violates the basic principles of modular design. The designer must correct this by some slight variation in dimension or else permit the window to be ½ module off center. There are three possibilities from which to choose:

(a) With the window off center, the wall spaces at either side become 4 M and 5 M.
(b) The width of the window may be changed by one module to make it either 5 M or 7 M, with the wall space at the sides correspondingly changed to 6 M or 4 M.
(c) The total wall width may be increased or decreased one module to make it either 16 or 14 M.

The same room might show examples of each of these expedients: symmetry retained with proportion in a major opening, symmetry with changed proportion in a minor opening, and exact symmetry discarded but proportion retained in another minor opening.

It is generally possible to adopt one or another of these alternatives with no serious practical effect upon design. More-

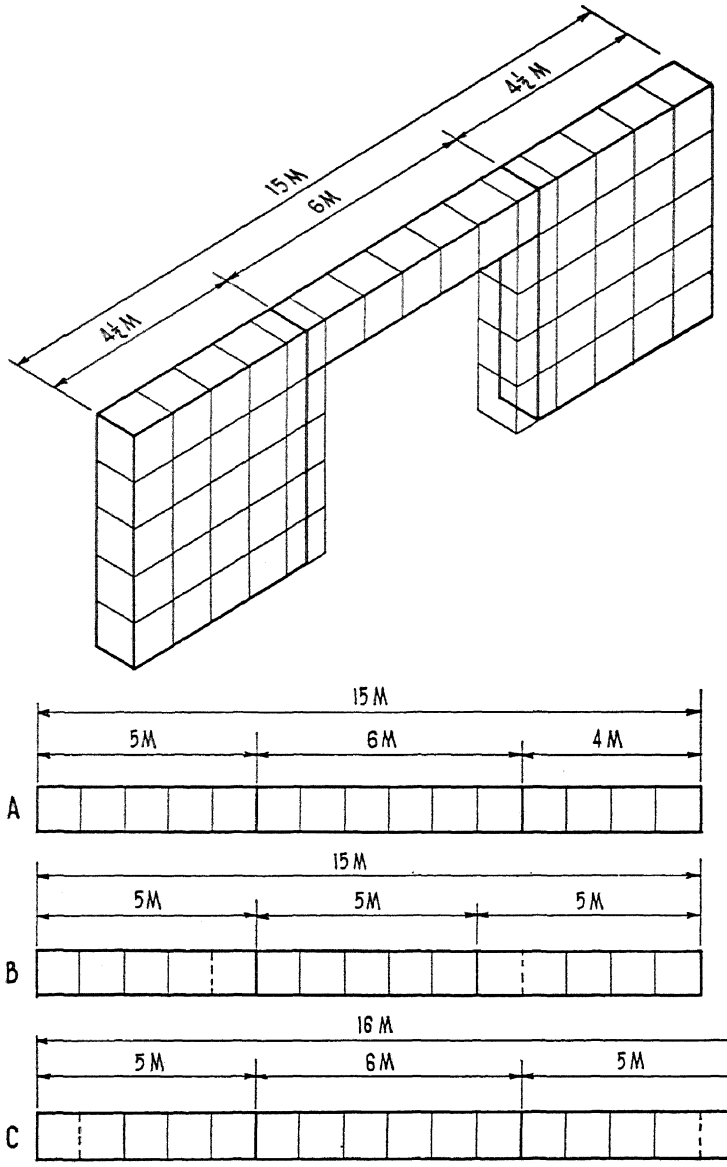

FIG. 95. RELATION OF WALL AND WINDOW CENTERING

Isometric shows non-modular centering of window in modular wall

A—Original window made modular by setting one-half module off center of original wall

B—Window decreased one module in width (or increased as in dotted lines) to center on original wall

C—Wall lengthened one module (or shortened as in dotted lines) to permit centering of original window

over, the conditions set down are more drastic than those usually encountered. In any design there can be little flexibility in a wall with only one window; but when a number of windows are to appear in a wall much variation is possible and the requirements of symmetry are readily satisfied. Although modern esthetic design emphasizes symmetry much less than did the more formal styles of the past, it may often be logically desired, if not required, in structures designed by the cubical modular method.[2]

As previously stated, it is not the purpose of this chapter to give a complete exposition of applied cubical modular design. The examples cited merely illustrate the kind and degree of adjustment that must be made in its theoretical principles, as set forth in Chapter VI, to adapt them to the present requirements of existing materials. The following points of practical design by the cubical modular method have been set forth in the foregoing discussion:

Similar parts of different sizes must vary in all three axial dimensions by exact multiples of the module, though such dimensions themselves need not be exactly modular.

Jointing means in the main framing, positioning, or interconnecting members must be modularly spaced in order to maintain modularity throughout the entire structure.

Repetitive jointing features in M gauge should be centered on jointing cubes; those in ½ M gauge on secondary cubes.

Clearances and tolerances to effect practical jointing must be determined by the properties of the materials used and the character of the joint.

Clearances and tolerances for all similar parts should be uniform.

Interconnection details for all similar parts should be uniform.

Parts, such as finish, to be superimposed on modular structure should be designed on the surfaces of the structural cubes as planar matrices, and their means of fastening should be located on the projections of the interconnection foci.

[2] A more complete analysis of the arrangements possible with multiple window groupings may be found in Appendix C, p. 321.

Finish, or other construction superimposed upon modular structure, should be designed to include modular corner strips and modular corner units, as well as panels of modular lengths and widths.

Special features such as openings — doors, windows, stairs — should be designed within strictly modular bounds, although the design of such parts within those bounds need not be modular.

All building materials and all structural systems have their peculiar advantages and disadvantages, scope and limitations. References to the centering and symmetry of openings have pointed out a limitation in the use of cubical modular structure, a limitation that is not found in some traditional constructions. In the case cited, the limitation is of no practical consequence to the engineer and probably not to the utility of the completed house — certainly not if the lower cost incident to cubical modular design and resulting mass production can be achieved. If in this or any other case the limitation seems to the designer of the particular building to be of more consequence than the coincident advantages, he will naturally specify other materials and methods. But from the viewpoint of engineer or architect the design of structure by the cubical modular method offers distinct practical advantages over current conventional methods. These advantages will become more and more apparent as its principles become better known and more utilized, and as manufacturers learn the specifications for their materials best suited to the method.

The form, size, and often the substance of existing building materials have to a considerable degree been determined by an old structural conception. A new conception therefore may demand materials new in form and size and eventually in substance. Although the application of the method here illustrated has been first to existing structure and then to existing materials, the objective of the conception is a new structure appropriate to the social and industrial conditions of the day. The use of such a structure will inevitably lead to new materials

peculiarly suited to the new conception. As such new materials appear, the practical adjustments required by a miscellany of materials adapted for use in traditional structure will necessarily become fewer, and applied design will more and more conform to the theoretical design described in Chapter VI.

CHAPTER VIII

The Cubical Module in Architectural Design

NOT only for the manufacturer, the industrialist, and the engineer but for the architect as well does the cubical modular method offer a solution, a resource, and a tool. Many members of the profession will at first deny its value. The conservative architect will regard this new method at best as limitation, at worst as another rash innovation. To the restrictions of traditional materials, to restraint of period and of certain canons of taste he is accustomed, but cubical modular materials, standardized house parts, modular design will seem to him the prison walls of the Machine Age.

The progressive architect, however, is aware of changed conditions that demand truthful expression in present-day buildings. He does not seek novelty at all costs, but would experiment conscientiously. He recognizes that period architecture and false imitation of the antique are simply signs of artistic decadence. They have been maintained by industry and commerce, because copying the ancients is sure and easy. But the modern architect is through with that. From the incoherence of "plagiarizing the centuries" he turns eagerly to rhythm, pattern, even rigidity, to Technical Architecture.[1] In the new approach to design offered by the cubical modular method he sees order; and order is what he wants to express in this age of confusion.

[1] Duncan, R. A., "The Architecture of a New Era" (Denis Archer, London, 1933) — one among many valuable books on architecture and mechanization, but outstanding for the brilliant and searching light it casts on the complexities of the twentieth-century scene.

Clients may be reactionary, but never for long. They want what is attractive, and their conception shifts rapidly, for people in general have learned to assimilate novelty. Advertising and lower costs are powerful agents, and the eye of the public is quickly caught and educated. The Century of Progress made familiar some aspects of modernity. Yet those aspects were only superficial. They represented a groping toward

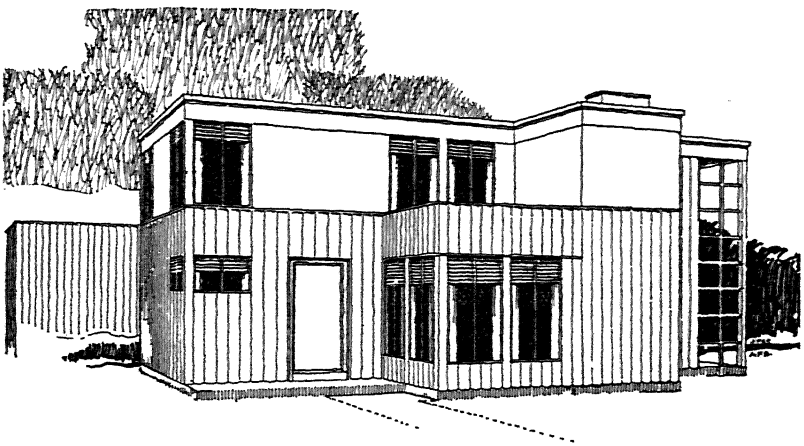

FIG. 96. DESIGN WITH STANDARDIZED PARTS

the future, but behind novelties of surface in no case was there a new structure consistent with that surface.

The failure to achieve beauty, so evident in most modern work, is due to the strangeness of the shifting world about us. The architect simply has not learned its potentialities and its conditions: it has changed too fast. There has been a "revolution in the world of appearance." [2] The inventions that brought on the Industrial Revolution were far reaching, but those that have revolutionized conditions in the last twenty-five years are even more powerful. Automobile, telephone, radio, moving pictures, and aviation — the impact of these upon the arts is terrific. Since the Exposition des Arts Décoratifs in Paris in 1925 we have all been aware of the changes in design, shown

[2] Mr. Duncan's book bears this subtitle.

largely, it must be admitted, in a commercialized kaleidoscope, an incoherent and chaotic splurge. Yet every transitional period in the great arts has been one of trial and error. In this epoch of speed it is especially difficult to judge of the fitness of things, to find at once that perfect adaptation of means to ends that is the highest beauty. "Functional Architecture," an expression used by many progressives, indicates a move in the right direction, but its enthusiasts cripple themselves by denying validity to esthetic motives. In theory, at least, they exalt utility to the point of rejecting beauty.

The term "Technical Architecture" is more wisely chosen, and expresses a broader aim, for technology opens the gate to future development. It is materials that are leading architecture onward, yet they are still in the laboratory stage; they will develop immensely in utility and esthetic value. Even now, the architect is using steel, aluminum, plastics, glass, plywood, terra cotta, and concrete tile for structure, and a score of new materials for finish and decoration. These products of the machine and of mass production are being used more and more frankly, first for their inherent structural qualities and second for their esthetic values.

Already the potent effect of steel has established a true architectural convention — that of the skyscraper. The modern city building, as we see it, is simply the sheath of steel framing, the great achievement of modern technical engineering. Metallurgy will not fail to continue the mighty creative effort that the nineteenth century, feeble enough in art, could yet make in the field of technology. The "Metal Age" or the "Machine Age" — either name defines our epoch. The "austerity of machine-made goods" [3] is the motif that will be established by architects who have a thorough knowledge of the technique of materials and of processes. Sound esthetics can and will use what technology supplies.

In achieving the beauty of the Parthenon, the conditions of the time — and practical requirements, as well as the intelligent

[3] Duncan, *op. cit.*

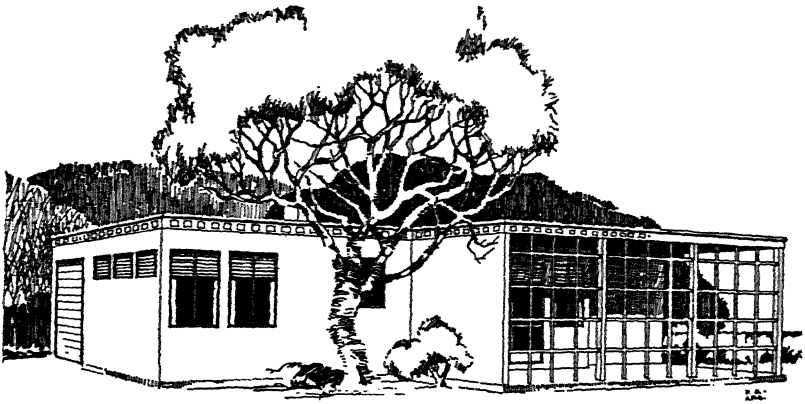

FIG. 97. MODULAR DESIGN THAT DOES NOT REVEAL THE CUBE

choice of materials at hand — were definite factors; and Ictinus and Callicrates would today create a work of art, though not of Pentelic marble and not another temple of Athena. The artist remains sensitive to his environment, and he will continue to create, as in the past, with the materials and tools at hand. Materials influence the form of structure, and in pure design beauty depends largely on fitness in the substances employed and on reason and logic in using them. The principle of unity in materials, in scale, in mass, upheld by the Functionalists, is important to architects who admit esthetic motive. Technical Architecture can hardly fail to be consistent with the logic of design. The first concern of the architect who plans a house is its layout, primarily as a habitation. Next come considerations of material, style, mass, and proportion, and finally those of details, finish, and embellishment. But whatever the style and proportions, whatever the embellishments and finish, there should always be an organic relationship, an underlying unity.

Practical design by the cubical modular method completely satisfies these demands of theory and practice. In supplying one scale for the whole, the cube gives unity to every component part, to differing materials, and to resulting masses. Order and simplicity result in harmony and the perfect adaptation of means to end. This method represents fitness and economy, since rectangularity, being the major premise for mass-production processes, meets current economic and industrial conditions. Yet for the same reasons it is expansive. For example, in the matter of finish the Functionalist is restricted; he insists that it be identical with structure. In the modular house, finish may be integral with structure or supplementary; the exterior may be different from the interior, but modular relationship is maintained.

However, the use of the module does not entail, either logically or esthetically, the adoption of square or cube as a motif in the main lines and masses of the elevation. The elements composing the house will be dominantly rectangular, the lines dominantly vertical or horizontal; but the cube, the unit of meas-

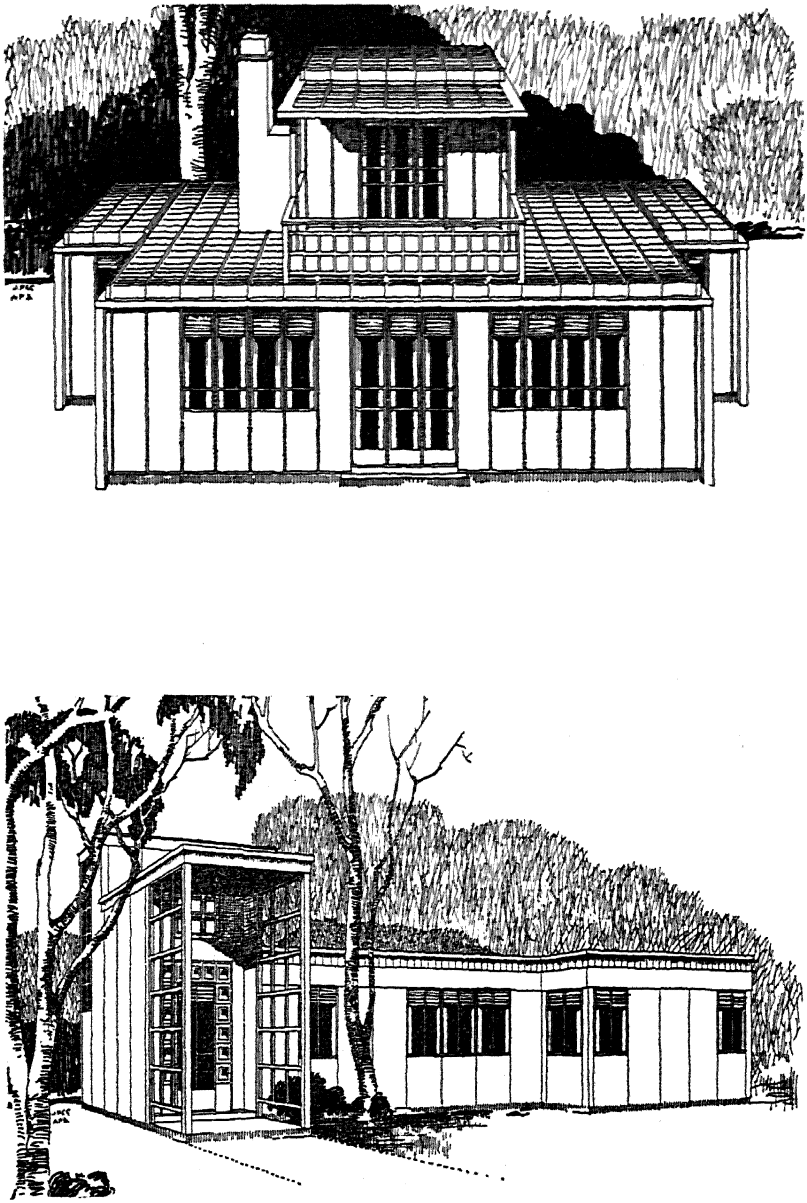

FIG. 98. VERTICAL TREATMENTS OF FINISH

Finish integral with structure (top); or applied afterwards to reflect structure (bottom)

urement for every part and for the whole, will be hidden, as it were, in the structure rather than manifest in the design. The simple types of the cubical modular house here shown demonstrate this combination of qualities. Diversity of plan, layout, and external effect is attained with standardized structural parts;[4] modular cubes need not appear in the design;[5] finish may reflect the structure or be integrated with it.[6] Some of the types illustrated are treated horizontally,[7] some vertically,[8] while some are of mixed design.[9]

The novelty of these houses is not excessive. They are practical dwellings — livable and attractive; nevertheless they are distinct innovations. The flat roof is the feature most likely to receive unfavorable comment. Yet there are many reasons why it is appropriate from an esthetic viewpoint; it provides for outdoor living and forms a linear connection with the landscape. The more advanced architects of the day, most of them Europeans but led by Frank Lloyd Wright, have no difficulty in employing this feature effectively. Dudok, Behrens, Le Corbusier, Gropius, and in our own country Wright, Howe, and Neutra, to name only a few, have shown that beauty and efficiency may be combined. The efficiency of the flat roof is coming to be realized. It offers real rooms in the attic, greater facility in alterations or additions, sunny, airy recreation space, roof gardens, view of airways; and the dead angles and fire risks of inclined roof structure are a good riddance. We may expect in time to see more flat roofs, and the producer of houses should welcome the change. Yet in the meantime mass-produced structure must be adaptable to the current preference for sloping roofs.

Certain supplementary or decorative features may have a prominence that subordinates their modular relation to the structure. Thus brickwork, designed to a different module, or

[4] As particularly in Fig. 96 and also shown in Figs. 98, 99, and 100.
[5] As in Fig. 97.
[6] As in Fig. 98.
[7] As in Figs. 99 and 100.
[8] As particularly in Figs. 96 and 98.
[9] As in Figs. 101 and 102.

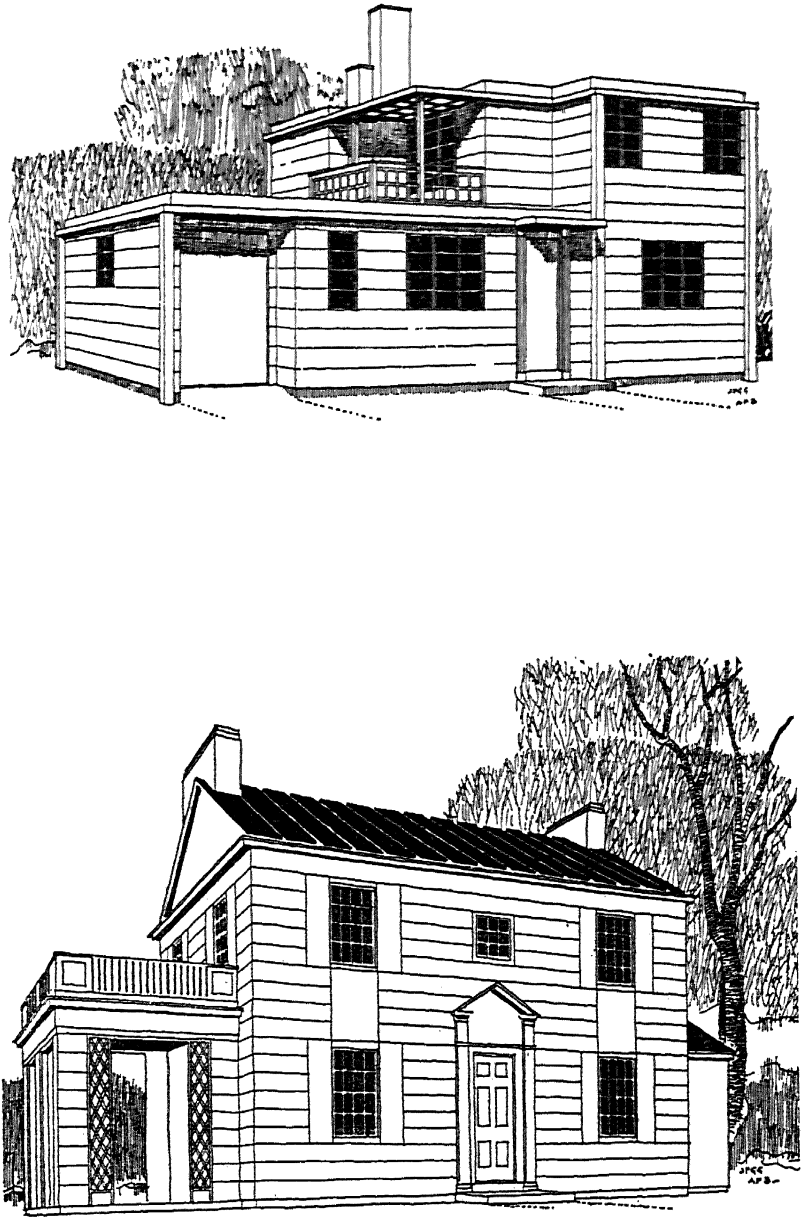

FIG. 99. PURE HORIZONTAL TREATMENTS OF FINISH

rubble-stone exterior, fireplaces, copings, railings, porches, and terraces outside the main structure, may have an exposed treatment or finish which, though cubical and modular where connected with structure, nevertheless dominates the effect. There is nothing in modular design to prevent the use of traditional material — brick or stone veneer or wood — in this manner.

The effect of the cubical modular method on minor points of architectural detail is far from cramping. For example, windows would become, as was explained in Chapter VII, more interesting as well as more functional. In the best architecture, openings are repeated singly or grouped with a very definite rhythm, in symmetry or asymmetry according to practical requirements. Good esthetic results may be achieved with a constant dimension for windows. Variations would occur where some requirement of use or furnishings calls for a smaller window, as over a kitchen sink, in a bathroom or bedroom. Such smaller windows would, however, vary by multiples of the module.

Finish is by no means limited to a vertical rhythm when designed on a modular basis. On the contrary, forms and masses usually suggest emphasis along the line of the horizon. There are various points of juncture between horizontal and vertical members that call for emphasis, such as floor and ceiling lines, tops and bottoms of windows, and parapet caps. Horizontal lines that serve to tie the elements together are thus created, and give desirable unity and simplicity to the whole. The logical use for screw heads and nuts, which are now customarily hidden in finish, would be to show them in effective design wherever they are used. The exposed heads, always modularly placed, might be given decorative form.

The apartment house and high school,[10] the city shop and tennis club [11] give merely a suggestion of the use of the cubical modular method for larger edifices. Commercial and industrial buildings can and undoubtedly will use the method for supplementary parts, such as non-bearing partitions, but the sky-

[10] Of Fig. 103. [11] Of Fig. 104.

FIG. 100. MODIFIED HORIZONTAL TREATMENTS

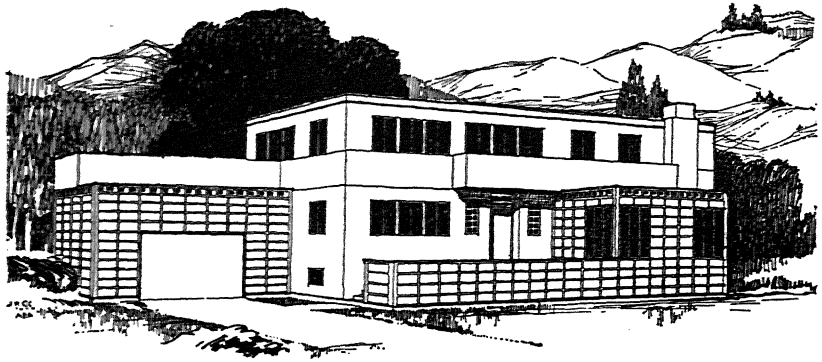

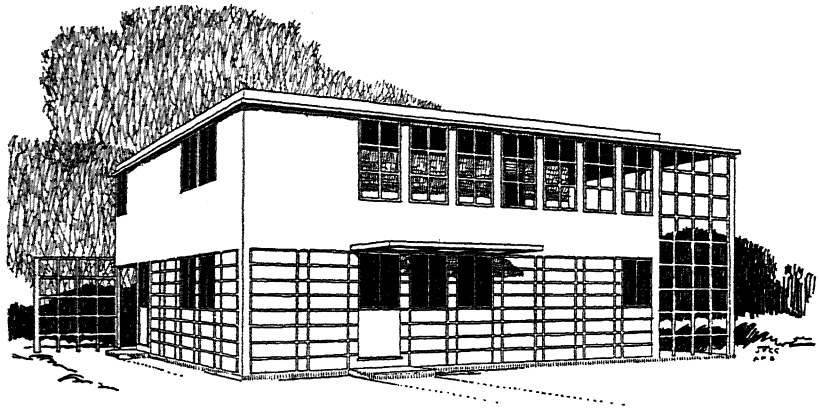

Fig. 101. MIXED TREATMENTS

Fig. 102. MIXED TREATMENTS

scraper by reason of its size already profits by most of the advantages of mass production and mechanized assembly. The number of repetitive features, the hundreds of rooms exactly alike, constitute a demand large enough to ensure that parts will be standardized and made in shops by mass-production methods. To modularize the Empire State Building, for example, would be unnecessary, for the overwhelming bulk of this type constitutes a mass demand. Compared with commercial, industrial, and communal buildings, dwelling-houses are so numerous that standardization of their component parts would unquestionably allow for great diversity. That point was covered in our consideration of standardization in its exact technical meaning for industry. The broader use of the word in esthetic and social discussions should, however, be consistent with the more restricted sense. Standardization does not mean drab monotony of exterior appearance or lack of intelligent planning.

The scheme of things indicated by the words " standardization," " mechanization," " modularization," " rationalization " is actually desirable. It would be a widespread improvement upon present conditions. That this is true in point of quantity, no one denies; in point of quality also it may yet be proved. The objections are mere bogeys. Individuality in houses, so excitedly defended, really means little more than the odds and ends the owner sticks inside them. Clear thinking will show that there is room in the world for the primitive and the natural as well as the modern and the artificial. " Hand-made " is a label that will always be highly esteemed in certain kinds of products, and, in a machine age, handicraft has increased value in the places where it is appropriate. It is peculiarly appropriate in the home, and the time will never come when there is not some demand for the highly individual, hand-wrought kind of house. Its peculiar qualities are desirable in their own way. In the future it will be relatively more costly as it becomes rarer, and will be correspondingly the more interesting to those who can afford it. But " ready-made," once an opprobrious expression

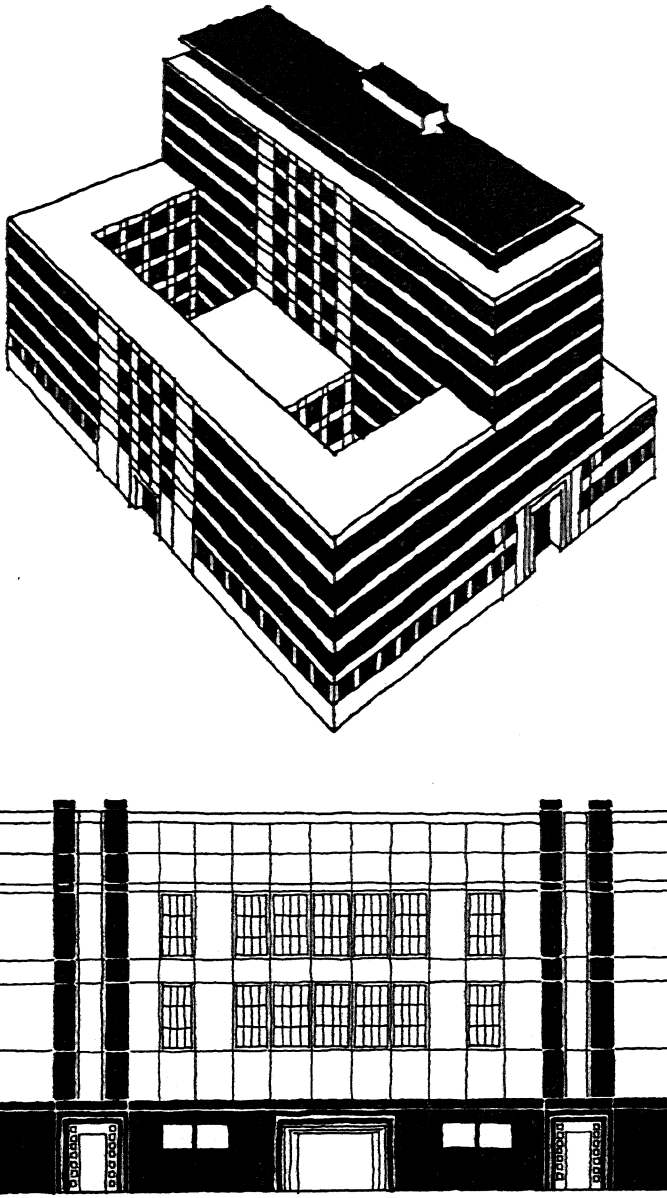

FIG. 108. LARGE-SCALE CUBICAL MODULAR BUILDINGS
An apartment (above); a high school (below)

as applied to clothing, is becoming an alluring term for houses.

If a competent architect works out an efficient and attractive plan there is no reason why it should not become the standardized layout for many hundreds of homes, and undoubtedly there will be increased use of houses with such layouts. The average family will choose among these rather than attempt to make up its own. Yet identical houses will be so scattered through a city or a region that with different accessories and different surroundings they will rapidly cease to be identical in appearance.

"Mechanization" is a menacing word, but "standardization" connotes an ideal of some sort: it implies not conformity but the wish to bring each part up to the norm — measurement, but by a pattern. It is ably advocated by Walter Gropius as follows:

". . . The modern time is about to develop a new organic working unit from handicraft work and machine work. The result of this rationalizing movement is the standard. Dwelling house building is one of the fields where the conception of the standard is beginning to get firmly established. Undoubtedly standardization, if consistently carried out in house building, would result in tremendous savings, which cannot even be estimated at present.

"The standard is no obstruction to cultural development, but on the contrary it is one of its underlying conditions. It comprises the selection of the best and separates what is elementary and above the individual from peculiarly individual features. The story about the individual being outraged and grievously injured by standardization and typification dwindles into nothing when we look back into history. At all times the standard, the type, has been a mark of civilized social order.

". . . A dwelling house is a typical group product, a unit of the larger groups, the street, the city. The uniformity of this 'cell' within the whole body of the city should be externally expressed. The necessary variation will nevertheless be provided by the difference in sizes and, besides, competition is bound to bring about the coincident development of different types varying in shape. The

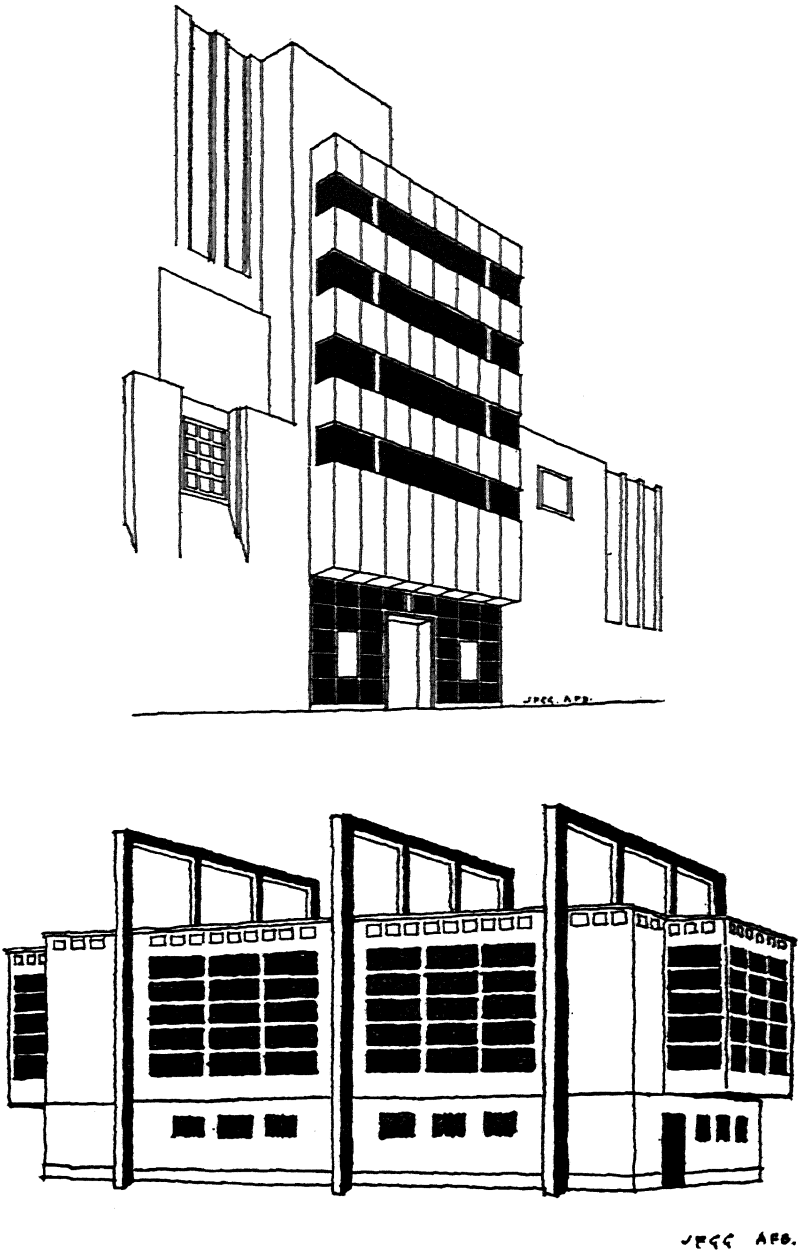

FIG. 104. LARGE-SCALE CUBICAL MODULAR BUILDINGS
A city shop (above); a tennis club (below)

best cities of past times show conclusively that the beauty and definite clearness of the whole body of a city is enhanced as standardization is carried out and typified buildings are multiplied. The standard is in all cases an ultimate and most mature result derived from the agreement of positive solutions by different individuals. It is the common denominator of a whole period. A unification of building elements has the wholesome consequence that dwelling houses and cities will again bear a common character; it is the hallmark of cultural elevation. By wisely limiting the buildings to a few standard types, their quality will rise and the prices be lessened, and in this way the whole social level is bound to be raised. A proper sense for tradition will not look for what is capricious and stands aloof but for the common features, the standard, which is able to satisfy many people, is most substantial and best in quality. . . ." [12]

Once again, standardization of parts does not place limitations on the diversity of the whole. Ample latitude remains for individuality to manifest itself. That this combination is possible is shown in the uniformity of modern clothes. While stereotyped to the prevalent fashion, they are capable of the greatest variation by individual choice. Tapestry, with its minute, uniform stitch, is an excellent illustration of the immense versatility that can result from a small unit of design. The logical uniformity of the cubical modular method gives the simplicity and unity demanded by esthetics — and makes these qualities not only compatible with standardization but enhanced by it. An unexpected effect of the use of the method will be diversity and individuality in architecture. Those who, realizing the futility of resistance, surrender to the "horrors" of mechanization will find themselves in a richer, more varied scene than they could have imagined. Easy mass production will supply such an array of different colors and materials, such an intermingling of textures and shapes, as to make choice difficult.

Ample flexibility in both plan and elevation for the house, of

[12] Gropius, Walter, "The Small House of To-day," in The Architectural Forum, March, 1931, Part I, p. 275.

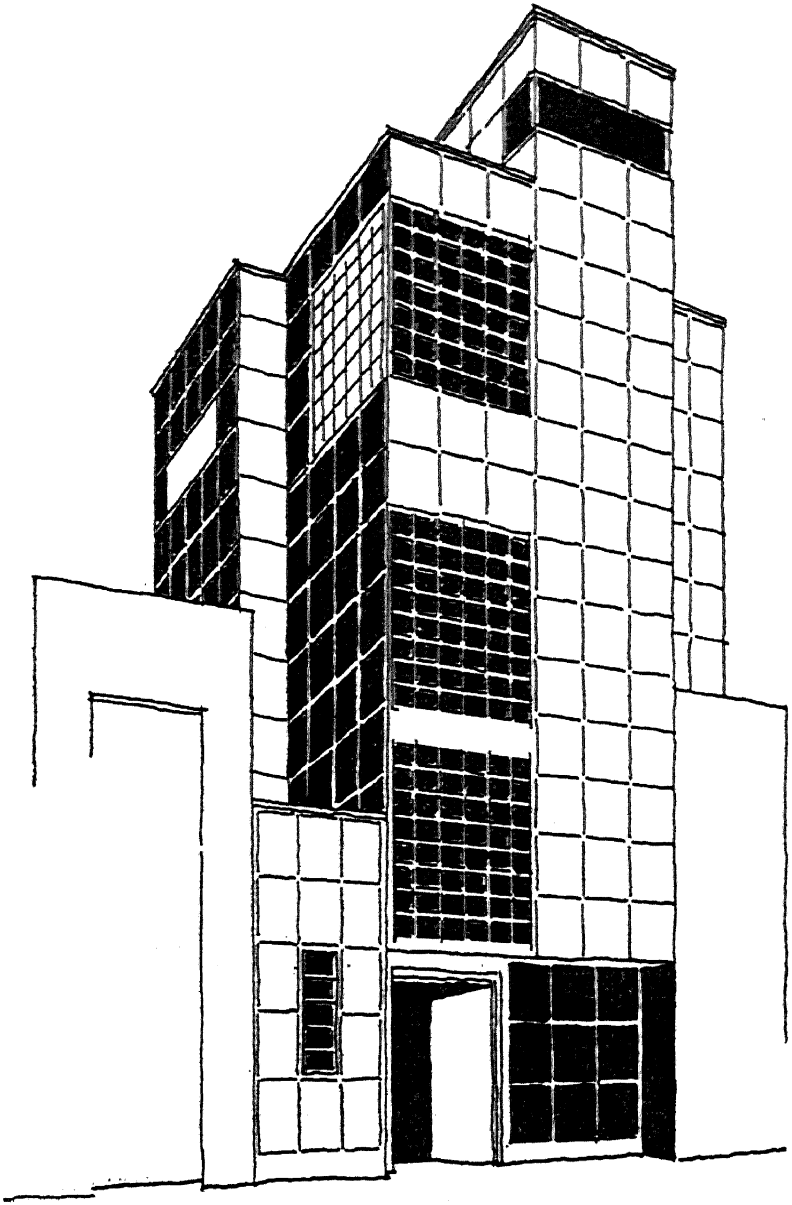

FIG. 105. CITY HOUSE

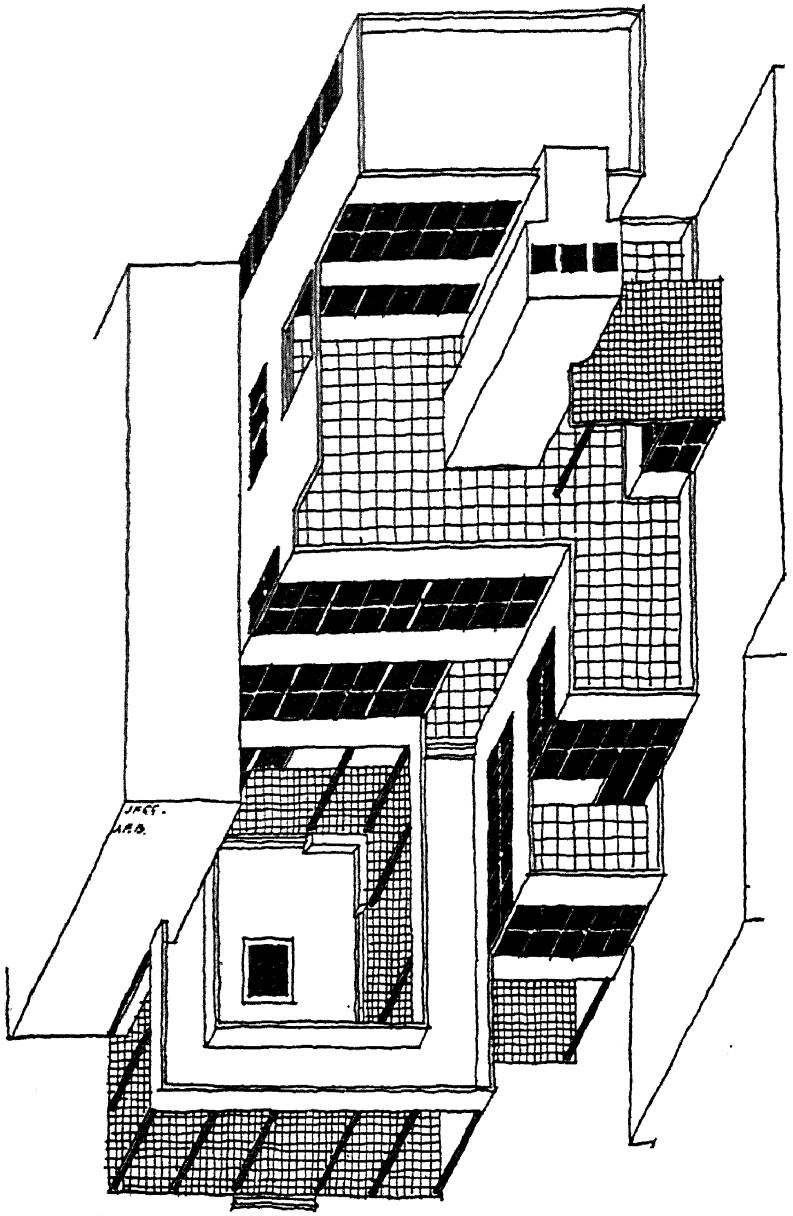

FIG. 106. CITY HOUSE FROM ABOVE

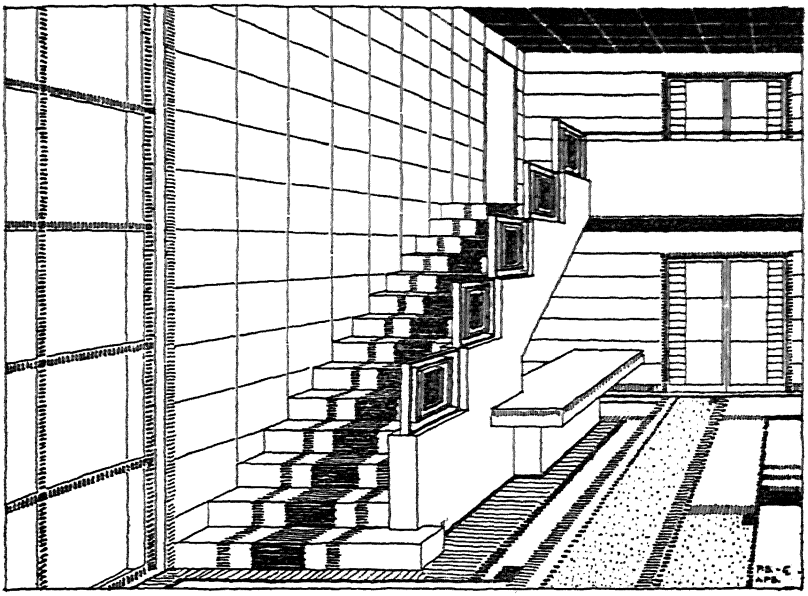

FIG. 107. A MODULAR HALL

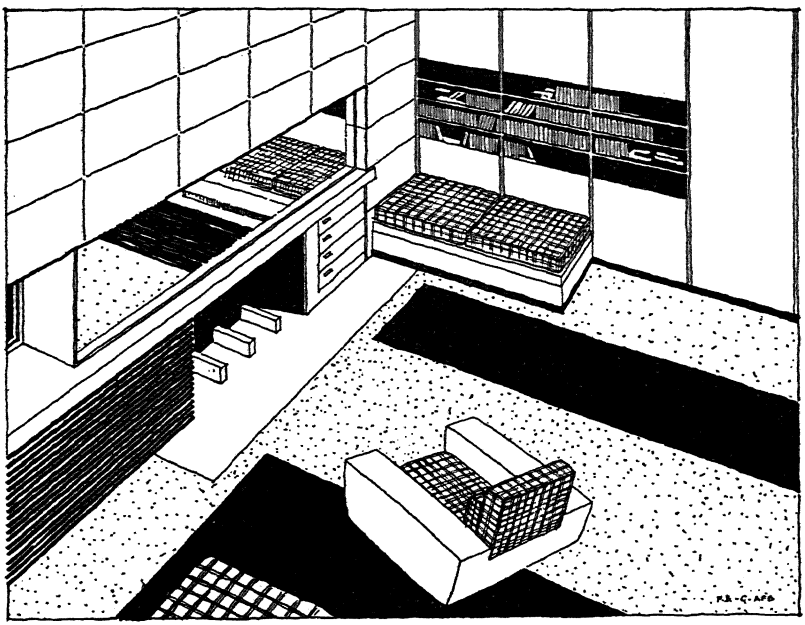

FIG. 108. CORNER OF A MODULAR LIVING ROOM

whatever size, is allowed by a module of four inches. And always there will be differences as between designers. Structure may be identical, but one man will use it with a more attractive result, perhaps in line and mass, perhaps in detail and finish, perhaps in relation to landscape or occupancy. The modular design of house parts can utilize every material, so that variation for landscape can be studied as never before. Natural building materials will offer valuable resources to the designer. And when

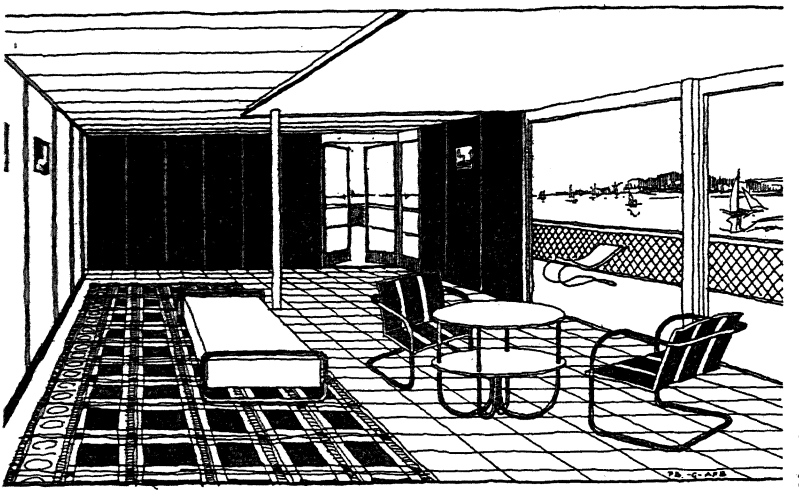

FIG. 109. A MODULAR LIVING PORCH

the new method is thoroughly mastered a creative mind can reincarnate in new forms, as Wren did in his time, some of the beauty of traditional styles.

Modularizing the small detached house will give not only the benefits of mass production but those of superior architectural talent to the hundreds of thousands who will live in these homes. It is for this overwhelming majority of our population — the country dwellers, the suburbanites, the small-town residents — that this first exposition of modular design is purposely focussed upon the small house.

A major economic crisis has been necessary to show the schools that domestic architecture is an important special sub-

ject. They are beginning to be aware of the small house. At present, eighty per cent of the dwellings of the United States are built without architectural service. These could be improved in every respect by the contribution of the architect — his insight into the art of living, his taste, judgment, knowledge of materials, and the intelligent use of his talents and experience. Architects now contribute their talent to only one-fifth of our dwellings. Through assisting industry to modularize as many as may be of the other four-fifths they will enter upon an

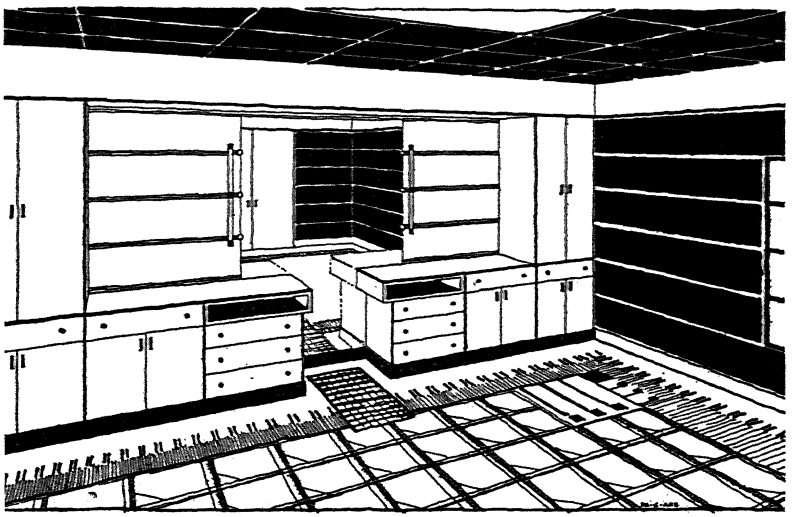

FIG. 110. A MODULAR BEDROOM

enlarged field of activity. Modular design offers wider scope to the architect, and the emphasis in this chapter, as in the entire book, is laid upon domestic buildings.

The house of the future stirs the imagination. The fantasies of Figs. 105 and 106 are readily capable of realization. Tower houses are a dream, — easily possible when elevators or escalators are further developed, — slender lofty structures that would give the maximum of sun, air, view, and privacy. Glass houses are another dream. The Dymaxion House and the House of Tomorrow, at the Century of Progress, will be copied and

developed, for the central service tower is a fertile idea. A house suspended from exterior columns [13] is perfectly possible, as was demonstrated in the Transportation Building, and even earlier in Europe. Garden-cities and multi-family dwellings in England, Austria, Germany, and Holland can be surpassed in future years both there and in America, where opportunity is ever present and idealism is far from extinct. Interiors offer wide scope for the imagination of the designer.[14]

This broadest possible field of domestic and communal housing awaits rationalization, which is imminent but can proceed only from standardization of method. Cubical modular design could precipitate the turn of economic conditions and enable the forces of communal life to be expressed in terms of architecture. If decentralization is a real trend of the times, small towns and suburbs will grow more self-conscious and self-expressive. In any case, communities will control and maintain the amenities of life, and community centers will dominate and focus their scene. Recreation has multiform activities, as compared with that of the Victorian era, and " the coming leisure " will develop it still more. New ways of life are demanding new expressions and new forms, city planning and regional planning are proceeding on a national scale.

The art that can embody and express these developments is architecture, and structure is its medium. The cubical modular method is a proposal to reform that medium, making it logical, simple, and plastic in the hands of creative genius. Le Corbusier, a truly pioneer spirit, says: " Great epochs of architecture depend upon a pure system of structure."

[13] As suggested in the tennis club of Fig. 104.
[14] See Figs. 107, 108, 109, and 110.

CHAPTER IX

Rational Production

ILLUSTRATIONS have demonstrated what our text maintains, that technology and art will, in the modular house, cooperate rationally. Structure and services will be integrated, as also structure and finish; layout and design will harmonize; and architecture and the building trades will make new combinations and deal with new materials.

The present condition of the housing industry was made abundantly clear in "The Economics of Shelter." In a more recent study from a different point of view it is mentioned as the most backward of all our industries: "The construction industry is one of the last strongholds of the traditional handicrafts. The transition from hand to machine methods was later in getting under way than in manufacturing, and has reached a less advanced stage." [1] The stage it has reached in some factories and to a certain extent in field erection may be studied in the valuable and realistic book quoted, which attributes to mechanization the prestige assigned in this volume to rationalization. "The introduction of labor-saving machinery is a never-ending process, sometimes accelerated by favorable conditions, sometimes retarded, but always proceeding at innumerable points in the industrial structure." [2]

But by whatever name it may be called, inevitable change is overdue in the building trades. Houses, a primary requisite of human life, are at present provided by archaic methods; they

[1] Jerome, Harry, "Mechanization in Industry" (National Bureau of Economic Research, Inc.), p. 134.

[2] *Ibid.*, p. 321.

are manufactured and erected irrationally, confusedly, with the minimum of organization. The process of manufacture should take place as far as possible in factories, and it should be subject to mass production, that is, subject to method, economy, speed, and rhythm. Erection should be assembly, pure and simple. And it should be standardized assembly, that is, similar in point of system to the mass-production methods of the factory. All the cutting, fitting, and changing now done on the site should be pushed back into the factory and eventually obliterated by scientific system.

In the new process, standardization, now incidental and applied to details and parts separately, will be coordinated and complete, and applied throughout the industry. At present — and speaking particularly of dimensional conformity — the standards defined for raw materials as used in traditional structure are given primary consideration; the standardization of finished parts made from those raw materials is secondary. In the new process, this will be wholly reversed, and the dimensional standards for finished parts will define those for raw materials, with a view to their better adaptation to the more refined, more accurate machinery that fabricates the final product. The adoption of a unit of measure for volume in building makes determinable the outside dimensions of raw materials, but it should also determine those dimensions relative to their use with other materials and in a finished product. Obviously, the purpose involved in the rough sawing up of timber is to produce lumber that may eventually be used in finished parts. The primary consideration, therefore, is not that the machines operating on raw materials in the rough be set to the particular gauge, but that the product of such machines be dimensioned according to the standards for the finished part, taking into account the intermediate aberration of machines, the drying out of wood, shrinking of cementitious substances, or expansion of plaster. From the point of view of standardization and mechanical manufacture, the standard of the finished part should be the primary consideration and define the dimensioning of raw materials.

The changes envisaged throughout this chapter are not dependent on the cubical modular method. Other means might bring them to pass, and rationalization will move gradually from present available means to a new system. In the meantime the housing industry will deal with existent raw materials. Natural organic and inorganic substances such as wood, gypsum, ores, and fibers will move as hitherto from their sources into large plants advantageously located. There they will be manufactured into the raw materials, largely synthetic, required by the new structural technique. In huge quantities these raw materials will be shipped, not to dealers, as at present, but to housing factories.

Under the cubical modular method, plants now producing raw materials with considerable up-to-date efficiency could continue to operate, serving both the old-style contractor and the new factories for housing parts. With minor changes in the form of their product they could meet the demands of the traditional builder and of the factory turning out house parts for thoroughly modular construction.

New plants, of national or sectional scope, would come into being, some manufacturing only the interfitting elements for composite parts, some only frames. Others — and these would serve smaller localities — would assemble and finish house parts. They would carry out the processes of cutting, bending, punching, bonding, would coat and paint and decorate, and finally ship for field erection.

Reorganization of the industry should distribute its various plants with more rational reference to source and to consumer. Initial processes of manufacture should be carried on in large mills or yards located at or near points where substances originate or to which they can be readily shipped. These plants would ship raw materials throughout large sections or even the whole country. The more numerous but smaller plants for assembling and finishing composite house parts should be located with reference to the density of population. They should receive materials, in form ready for efficient assembly, and send out

their product — standardized, interfitting units of modular structure — ready for final field assembly. It is reasonable to manufacture composite house parts, which are necessarily bulky, near the places where they are to be used. Therefore housing factories, like brickyards, should serve sectional areas, and should be distributed in communities according to the demand that will maintain them.

There will be various schemes by which the house is manufactured, even should every system be based on the cubical modular method. Indeed it is to be hoped that in different localities highly differentiated styles and materials will be employed. Any given factory will use numerous materials to fabricate house parts, which will be designed for every type of layout but on a definite structural scheme and a perfectly modular basis. Every given part of the traditional house will have an equivalent in the new structure. Subsidiary factories will supply bolts, screws, and finish.

Finish, when integral with structure, will of course be included in the work done in the factory. If it is to be applied later it should be modular. Paint and stucco can obviously be sprayed on in the factory, though final finish might be applied after erection. Surfacing by plaster guns and paint spray guns after erection will in some cases have advantages.

Parts should be of such sizes as can be readily handled, and means of connection should be semi-automatic. Shop assembly and transportation could certainly deal with sizes and weights comparable to those used in the automobile industry — sheets of metal, lumber, and maximum sizes of synthetic boards. The dimensions of the complete units would probably be story height and minimum room width.

House parts should be so designed as to include in the structure complete provision for service accessories such as pipes or wires along the lines of jointing of major units or in corner chases and cornices. Such inclusion would not only eliminate the present wasteful and destructive procedure of installation, but would speed the process of erection to a desirable degree.

Thus there would be transferred to the factory the work now done in the field or in an improvised and temporary field shop. The immediate results of the changes in technique should be great economies, first through the standardization of raw materials, which would save time, labor, and material, then through mass-productive methods in the factory, and finally through elimination of the worst of the present waste, which occurs in the field.

Architects and engineers should be associated with the housing companies in a profitable and honorable connection. On the safe foundation of a guaranteed and established product their talents would achieve reputation and prestige. The name and credit of this or that firm would be sustained by cooperative effort, and the functions of architect, of engineer, and of builder would be integrated and made available to a greatly enlarged public.

In the cost of the house as now built the amount of handling is an important factor. The reorganization of the industry as described would greatly reduce that item. Loading and unloading may be distinguished from the handling incidental to manufacturing processes, but there should be less handling of all sorts throughout the industry. In the factory, better procedure and a higher degree of mechanization should constantly tend in this direction; the rearrangement of equipment, progressive assembly methods, conveyors, cranes, hoists, monorails, tractors, would decrease the amount of handling during the processes of manufacture and assembly. In the movement of building materials from source to mill, to housing factory, to site, at least one item of handling is eliminated by the absence of the storage warehouse or dealer's yard. Those particular agencies and agents should be absorbed into the housing factory.

The problems of transportation to and from the house factory will be the same as those of present raw materials and the supplementary elements now made by semi-mass production — wood flooring, doors, windows, and roofing — except for increased volume. Inter-factory transportation makes up a large

proportion of the work and costs in the heavy industries. In the construction industry this movement of goods is unsystematic and on a retail scale. It is duplicated unnecessarily and is therefore too costly and too laborious. With factories located within reasonable distance of all sites to be served, the transportation of house parts to the site could be comparable to the present transport of furnaces completely set up and of several automobiles at a time. Steel beams, girts, and posts twenty to thirty feet long are not too large or heavy, and finish, which is likely to be applied horizontally, could be transported in greater lengths, because light. Trucking is the apparent means of transport, as at present, but trucks and railroad cars might be specially made for the purpose.

Field storage, a great difficulty and expense and cause of waste, could be completely eliminated. Composite parts could be positioned and assembled as fast as they were unloaded. The difference of process at this point is tremendous. Houses are now manufactured on the site, with delays and difficulties and waste unspeakable. When the industry is rationalized they still must be finally assembled, or erected, on the site, but with standardized mass-produced elements this final process could be standardized assembly, swift, accurate, and economical. The workmen for this job would largely be skilled mechanics, and present-day contractors would not be likely to engage in this part of the industry except as they might operate the factories.

For standardized assembly the requirements are that factory dimensions of units have narrow tolerances; that units be of such size, weight, and character as can be readily handled by few men with few tools and with a minimum of measuring and adjusting; that connections and jointing be semi-automatic; that the placing of one element shall not injure another but aid in placing it. All these requirements are completely met by composite building elements designed according to the cubical modular method, which further facilitates erection by its standardized interconnections.

Field erection means should include less paraphernalia —

power shovels, hoists, pneumatic drills, power saws, scaffolding, derricks, concrete mixers — than are used for the present house. Electric welding, excessive quantities of plaster and stucco, of poured concrete, of brick and stone masonry, all take time and therefore money. Plaster not only is slow to dry but constitutes a health risk while damp. Mechanized assembly will save all the time now lost in the drying of plaster, concrete, and paint, and in the disorganized activity that ties up money in a torn bit of ground, a wilderness of scaffolding and half-done construction, all useless, for months on end. Another factor in field assembly is weather risk. The speeding up of erection would greatly decrease the possibilities of financial loss on this score.

Such automatic assembly, with its reduced cost of parts effected by mass production, would mean really tremendous economies. Waste would be eliminated all along the line — in the factory production of parts, in transport without storage, and in speedy and skilled erection. Economy is the striking characteristic and the socially significant aspect of the picture of rationalization here delineated. Factory economies have been mentioned already, and the elimination of waste in the semi-automatic field operations. Less obviously but very surely there will be savings in the first cost of materials, some by repetitive operations, more by the simplification of inventories, and still more by easy marketing of standardized stocks. All these ensure a definite drop in the cost of the finished building.

A house made of standardized parts will be acceptable as a standard basis of security to lending agencies. These will very possibly be developed by manufacturers themselves, as in the motor industry or by limited-dividend corporations. An integrated industry means economies throughout. Companies might still be small but cooperative to a great extent. The will to cooperate already exists. The Bureau of Standards is promoting simplified practice as beneficial to manufacturer, distributor, and consumer alike. " Better value for money, better quality, prompt deliveries, quick replacement service, lower maintenance costs, simplified specifications, and protection

against unscrupulous traders" are the advantages it predicts for the consumer.[3]

A slow development and gradual rationalization of the various competing systems of pre-fabricated housing might make haphazard use of the idea of modular design for house parts. But in a short time this extremely backward industry could be revitalized by production according to a standard module generally agreed upon and universally employed. Complete scientific information through reliable research organizations would be generally available, with restrictions of patent rights only. Competing systems of construction could cooperate as well as compete, to the advantage of the customer, as in the automobile business and a score of others. If a few large companies amply financed and ably managed, including those already engaged in this field, adopted the cubical modular method for the manufacture and erection of housing of various types and in various materials, the smaller concerns, the architects, contractors, and builders would follow suit, and the rationalized industry would soon be firmly established.

Although capital is called for as always, it is believed that were enough men trained in practical business to grasp this opportunity for creating real activity in one of the greatest "heavy industries," they could actually initiate the movement towards better business and better housing. Any new industry requires the development of capital goods. In this case these would be the housing factories and warehouses.

The attitude of labor toward the changes in process would be a serious consideration if it were not likely to change. Workmen trained to do certain work in the old ways naturally resent an attempt to revolutionize their habits; and they cannot be blamed for apprehension lest their jobs disappear. Industrial progress is often retarded by the conservative, not to say reactionary, attitude of people who know just enough about materials to think they must be used in the traditional ways. But

[3] Bureau of Standards, Commercial Standards Group, R. M. Hudson, Assistant Director, "Results and Benefits of Simplified Practice." Pamphlet issued November 15, 1928.

changes have come in such swift succession that the Luddite attitude is growing rarer. Mechanicians recognize that mechanization is inevitable and that the resulting unemployment is usually only temporary. " The position taken by labor towards the introduction of the machine has, in fact, varied over a wide range, from vigorous attempts to prevent its adoption and use, through discouraged indifference to its progress or acceptance qualified by restrictive control measures, to reluctant acquiescence, and finally, to the stage of cooperation for efficiency where the worker not only acquiesces in but even helps to initiate innovations, with the hope of sharing in the resulting gains." [4]

Labor, then, tends in the long run to cooperate with rationalization, and the sooner it is made plain that in the mass production of houses of modular design a new industry is both demanded and offered, the sooner will labor recognize that any policy of obstruction is against its own interests.

[4] Jerome, *op. cit.*, p. 355.

CHAPTER X

Patents and The Cubical Modular Method

THE author has endeavored to cover by patent, in this and other countries, the physical form and dimensional relation of the component elements of cubical modular structure. He has consistently followed the policy of taking out patents not only in the United States but in foreign countries.[1] Many persons, however, hold that methods, processes, or products that increase the general public welfare should not be made the subject of monopoly. Since the writer intends that the public shall profit materially and culturally from this invention, and hopes in particular that it may help to solve the important national question of housing, is he justified in patenting it?

Perhaps the most cogent reply to this question will be a brief consideration of the patent laws of this and other nations. No one who has had experience with the complications, irritations, and expense of acquiring patents and proving them valid will doubt the sincerity of a conviction that such valid rights are ethical. That they are essential to establish, administer, and develop any process of sufficient scope to be susceptible of private effort is beyond question.

Patents are formal government grants to individuals or organizations. They cover the privileges of use or development of objects of invention. Originally such privileges were granted and protected by the state and were based on trade technique. Later, patents were specifically directed to physical improve-

[1] A list of the countries in which the cubical modular method has been patented, is given in the Appendix, p. 825.

ments and processes, and later still to abstract and scientific invention or discovery, such as Marconi's. The broadest application is something in the nature of a process patent, and, if it is based on a newly discovered natural phenomenon, the patent may virtually be that phenomenon.

The granting of these privileges to individuals by the state is, clearly, to stimulate individual initiative for the general good — even through the motives of private gain or personal ambition. In that respect, patents are essential to the public interest, and make of inventive genius an evolutionary force.

Briefly stated, the patent document is a *quid pro quo*. In return for a complete description — one supposedly clear, concise, truthful, and germane — of an invention or process, the nation confers upon the applicant[2] a brevet of monopoly for a varying period of years, seventeen in the United States. The law specifies that the invention must be new, useful, and not prejudicial to the public morals; some nations require that it be definitely a composition of matter, a process, or a method. The applicant must establish the novelty of the idea in the face of evidence presented by the patent office as to previous conception. To forestall infringement through change of detail, the statement of claims to be allowed on the patent should precisely define every necessary element and no more; it should also anticipate and protect possible developments of the invention. Upon these important points — and in most countries — the applicant receives little help from the government offices.[3]

[2] It is deliberately that the writer here uses the word "applicant" instead of the expected term "inventor." The patent office confers the monopoly on the first petitioner who successfully prosecutes the application; in some countries regardless of whether or not he is the inventor, and in others only upon his oath that he is.

[3] An amusing example of the difference in examiners' practices may be found in their treatment of perpetual-motion inventions. The British patent office takes the view that a man applying for a patent on such a machine is slightly unbalanced, and issues him his patent forthwith and without search, on the theory that the patent will hurt no one and may please the individual. The United States patent office sends the inventor a letter, saying that the device is inoperative and offering to let him have his filing fee back if he will withdraw. If he refuses, the case is at once rejected as unpatentable, and he loses his filing fee.

These preliminaries may even involve litigation against a previous patent, which, in order to preserve a trade secret, has stated its claims so obscurely or inaccurately as to be inoperative or to constitute no real advance over the prior art, or against a patent which in representing some single new process has tried to monopolize the future field by including in its specifications hypothetical ideas incompletely developed. Such litigation may involve the applicant against all the resources of a wealthy corporation, and he may find that a weak patent in strong hands is a better document than a strong one unsupported. In some countries patents are issued with so little scrutiny that until they have been established by actual suit against infringers they have no real force.

Should a particular invention verge on the principles of pure science, the inventor will find himself facing a gap in the statutes and in the capacities of the patent-office examiners,[4] as well as a larger ethical question.

In all these considerations the applicant must cope with a different variety of detail for each country in which he seeks to establish patent rights. This variety of detail must be dealt with

---

With respect to serious cases some nations are most arbitrary. In Brazil the question of anticipation is brought before a board of three politically appointed "experts" who decide yes or no, frequently merely on the ground that "they think it is not patentable." There is appeal at a price from this board, but the entire procedure is unsatisfactory. The Japanese practice is even more capricious and usually results in flat rejection of a foreigner's patent. The author obtained but one patent in Japan out of many freely granted in other parts of the world. Soviet practice is fully as arbitrary as the Japanese. The pre-Nazi German patent office was, on the other hand, most helpful. The author has had no patent experience in Germany since the accession of Hitler.

[4] Although the author has the original work of Doctor Langmuir and the mathematical equations of Einstein impartially in mind, the cubical modular method patent applications offer a simpler case in point. Examiners in many countries had never before been confronted with this sort of invention. A complicated machine with one new and patentable part would have been readily understood by them, and the new part at once recognized as patentable. As it was, the broad basic principle of cubical modular structure appeared to many so simple as to represent no new idea; and they were constantly confused by terms, particularly "module," which has been used many times before in related though by no means identical meanings. It took far more time to explain to examiners what the cubical modular method actually was than to convince them, once instructed, that the idea was new, useful, and therefore patentable.

simultaneously if he is to prevent the immediate pirating of his idea in certain countries. A like variety of time restriction is also forced upon him. According to his purse and probity he may take advantage of these, however, in measures of delay that may extend the period of his monopoly by as much as seven years.

The useful duration of a monopoly, unfortunately, varies in inverse ratio to the relative importance of the invention. In the case of an invention involving change in the habits of peoples, the period of monopoly, while offering opportunity to develop goodwill, reputation, and working policies, often ends too soon. The patent expires just about the time that profitable commercial development begins.

The patent once established, the inventor's use of his monopoly comes in question. Owing to the theory of the patent, which is very different in doctrine from the popular conception of it, this use may be a limited one. The patent law confers upon the inventor the right to prevent others from making, using, or selling the product, method, or processes described in his claims; it confers no rights to practise his invention, since these rights may be limited by patent to others. He may be able only to limit the scope of their activity with respect to the matter claimed. Nevertheless, as a patentee, the inventor is now possessed of a monopoly. He may sell his rights; he may license others to use his patent, that is, he promises, for a consideration, to refrain from suing them for infringement; or he may simply file away his patent in order to prevent encroachment on his present business. Even this last choice is properly within his ethical as well as his legal rights, since by publishing the idea he makes it generally available at the expiration of the grant. Ethical possession of a patent does not, however, dictate ethical practice. Certain industries meet the provisions of anti-trust and combination laws by pooling patents, granting licenses to the other units of the industry, and thus maintain prices as a condition of the licenses. The ethics of such practice is open to debate. Ethical standards also change with the spirit of the times.

With his patent granted and his attention transferred to the development of his product, the patentee may be further hampered by the restrictions of working requirements. These, beyond the scope of the original theory of the law, have been imposed in most countries except the United States as a source of revenue and a sop to labor. The penalties for failure to work are various; some countries actually invalidate the patent. These requirements are oppressive in proportion to the importance of the patent; the more basic the invention, the longer it takes to get it under way.

In all European countries the taxation of patents is customary. Taxes may be imposed from the date of application and increase in amount each year, regardless of the social value of the particular patent. A proper imposition of taxes — after a trial period to determine comparative commercial merit — would be of benefit to the patentee in winnowing out useless patents.

The above recital seems a necessary preliminary to the further discussion of the ethics and practice of monopoly as definitely applied to housing patents. The principles and purposes of patent law are not questioned, but whether applied to housing or to some other industry of major social significance, the ancient dilemma of the difference between theory and practice remains. Specific changes in statutes and greater coordination between the laws of the principal nations must be effected before an applicant may be accused of selfish motive in trying to secure for his inventions a measure of validity, control, and support.

The difficulties of acquiring patent rights have been enumerated, and the fact pointed out that although the inventor enjoys a temporary concession, his invention may be of value to the public for many years beyond the term of the patent. The question remains whether an inventor who has conceived a new idea and one of worth in a permanent field of human activity is ethically entitled to secure for himself the advantages of this

monopoly. If he profits by it, even though honorably and temporarily, yet to the fullest extent, is he still a public benefactor?

On the other hand, perhaps something besides high principle is the motive for objection to patenting. Is it an abhorrence of monopoly that in this country has manifested itself consecutively in the Declaration of Independence, Jefferson's principles as against Hamilton's, Theodore Roosevelt's big stick, and the present tendency toward government intervention in private affairs? This recurrent fear of the abuse of commercial power should not be underestimated. But although many a business scandal can be blamed on monopolistic enterprise, many an example may be found of the right monopoly for the benefit of the public and the private owner.

Those who fear commercial monopoly fail to note that monopoly operation, just as surely as competitive operation, is governed by economic law. Moreover, commercial monopoly is quite different from patent monopoly. As previously stated, the owner of a patent can only prevent infringement of his declared rights; he cannot establish a price for his commodity regardless of competition with other patented and unpatented articles or services. Nevertheless, there is a definite and vocal opinion that the inventor of a method or device of definite benefit to the public at large shows at least poor taste in patenting it. Professional organizations, medical, engineering, architectural, are opposed to patents being secured by their members. But where savings of real importance are made possible in the general public economy, does that conservation usually find its way to the public coffers and the general purse, or to the pockets of individuals? Is there any good reason why these individuals must never be physicians, engineers, or architects? Would not the organizations they represent further public interests if they recognized the possible benefits inherent in patent rights by setting up codes for the ethical *use* of the patents granted?

The wider the practical application of the invention and the

more permanent its ultimate value, the longer it takes to develop its working principles and find the best methods and policies of administration. In the first place, how is an important invention to be protected from patent and consequent monopoly by others? How can the method be otherwise protected from the charlatan or incompetent person who attempts to exploit it prematurely, and for his own private gain?

A definite example might be introduced from any of the professional fields — a new cure in medicine, a new bridge design, a fire extinguisher. The requirements remain the same. Public confidence must not be destroyed; injury, pain, and death must be prevented during experimental stages; and, above all, honest distributing agencies must be established, so that at the expiration of the patent the method shall not only have proved itself, but shall be firmly established in the hands of competent and honorable organizations. Even to the most ethical, such motives must commend themselves. And economic law may be cited once more. The commercial success of any large project depends not only upon the coordination of its parts but upon the distribution of its commercial benefits. Private gain is relative to public gain, and definitely proportioned to it. In other words, private gain demands a proper distribution of profit. Commercial inventions intended for the public good must operate in fields not regulated by the professional code and must meet competition that does not offer choice of weapons. The proper working of inventions must seek every protection that can be found, even that of profit. It is faced by constant threat, and the greater the possible and ultimate benefit, the more warranted the protection.

The housing problem touches the life of every one of us, and it is essential for the further progress of our civilization that we handle it rightly. Panaceas are suggested with monotonous frequency. They deal, on the one hand, with methods of financing, with changes in social custom, with the organization of business, or other such matters, and are therefore not patentable; many, on the other hand, deal with changes in house structure and are

generally patentable and patented. Division 33 of the United States Patent Office is one of the busiest of all the departments of that office. This can hardly please the ethically minded. They can be spared a portion of their agitation, however, if they will but consider the paramount requirement of new construction patents.

Any new housing structure — to succeed — must permit the building of the same house for less money, and any realignment of methods must meet that economic requirement. After that possibility is established, the inventor can look forward only to providing a *better* house for the *same* money. Social betterment demands that standard housing at less cost be made available to greater groups of the population. This goal can be reached only through a rationalization of the industry and the application of the principles of mass production and mass consumption, both of which are contingent upon low cost. No new type of construction will have significance in solving any problem unless it produces housing of the proper standards at a price not now attainable. Facilities that already exist can supply the demand, but only at too high a cost; and it is well known that the conventional and accepted type of construction is more popular with the average buyer than anything new.

Even with this restraint of price upon him, is the holder of the patent still to be censured for not allowing the maximum financial advantage to the purchaser? This is a point on which speculation is idle; the relation of profit to the patentee and profit to the public cannot be academically determined. The broader the usefulness and the greater the social significance of the patent, the greater will be the advantage to the consumer. This point is evidenced by the radio. The only way to create a demand was by making the service as cheap as possible. The consumer received the bulk of the advantage. The inventor can profit only if he holds down the premium on his invention so low that low cost and mass production can develop mass demand. This fact remains unalterable: *some degree of actual price advantage will rest with the consumer.*

This requirement has a greater importance. Such saving will primarily enlarge the group to which adequate housing is available, and thus react upon the present social dilemma of housing for the lower-income groups. Only when invention and the distribution of profit make housing available to those groups *through their own efforts* will that problem be solved. Other methods are only palliatives. It has been the sad experience of the world that endeavors *pro bono publico* not paying their own way usually prove to be tragic misadventures. A wealthy man may build a thousand houses in some selected spot by some radical method, taking no account of the cost, and then sell these houses to people of the low-income groups at 25 per cent less than conventional cost. Such a venture will do nothing to solve the housing problem. The individual act is charitable; the individual buyer will profit. But society as a whole does not advance that way. If this action is duplicated by a thousand wealthy men, their efforts will only smooth the surface here and there according to individual impulse. If the impulse is socialized — by what amounts to confiscation of wealth through taxation, and its redistribution through government housing — the solution reached will, in the opinion of the writer, be utterly unsocial unless house provision as a vital part of the group organism contributes its proper share to the group economy, that is, unless the provision of housing by government, as by private enterprise, pays its own way, and in equal proportion.

It is the author's conviction here repeated that in only one way can a solution of the housing problem be reached. The solution must come through decreased cost of construction, and decreased costs must be actual. They must not be paper savings achieved through relaxation of taxes by the state, or relinquishment of profit by the producer. It was the original thesis of this book that *proper solution of the housing problem must be in a redesign of the structure. Furthermore the sale of such redesigned housing must be at lower cost than for the conventional type, while still affording a profit to the entrepreneur.*

What the entrepreneur does with his profit is unimportant.

He may turn it back to the state if he likes; but if the venture is to be socially effective it must be at least self-supporting. To be self-supporting, it must have the same opportunity that every other new idea needs of developing itself, free from unequal competition, until it reaches the measure of its strength.

The "entrepreneur" appears here for the first time in this connection as a substitute, perhaps, for the "inventor." This slight shift of emphasis in no way contradicts any previous argument, but illustrates the shift that must occur as inventions are perfected to the point of distribution.

Many systems of housing reform suited to mass production have been brought before the public, and not a few have merit. It is well known that the cost of a first article made according to mass-production methods is exorbitant. The production of a thousand such articles will be at lower cost, and of ten thousand lower still. One inventor in the housing field has said that the first of his houses might cost a million dollars, but that for each one of a million the cost would be relatively slight. In actual practice, however, it may be found that certain parts are not amenable to mass production or that the estimated economy is wide of the mark. Under even the best of conditions, the first house built will cost more than the traditional house, but to overcome sales resistance it must sell at less, or certainly no more.

In other words, the inventor or entrepreneur must ordinarily take a loss on a considerable portion of his early production in order to introduce his commodity. There are two ways in which he may take this loss. He may invest large sums of money in plant and equipment, and instantly produce mass quantities of building materials already cheap — and risk losing everything if too many details need correction, or if he cannot develop the mass demand for cheaper housing into prompt mass consumption. This course dares all and requires an immense capital, far beyond the resources of most inventors. The other course is one of gradual expansion. The inventor develops his production only according to developed consumption, producing a greater

quantity of houses at a decreasing cost per unit until, through mass consumption, he reaches full mass production. In this case, also, a considerable capital will be required to absorb the constant albeit decreasing loss during the transition from small-scale to full mass production; and a further period of constant and increasing consumption will be necessary for adequate returns on the investment.

There is little to choose in either case as to the amount of capital involved and the ultimate risk. But to have these funds supplied by the state is socially and economically undesirable in this country. Private capital must be attracted to invest in the venture, for, as we have pointed out, private capital contributed as philanthropy cannot furnish a permanent or desirable solution. The requirement, then, indicates a patent structure that assures to investors reasonable protection during the period of development. It is hard to conceive of any other basis than patent or similar protection that will attract the necessary capital. Proper integration of the numerous industries contributive to housing does not mean that these should all be absorbed into one large corporation — a housing trust — but rather that they should cooperate on a rational basis and with a bond of enlightened self-interest to hold them together during the pioneer days of a gigantic task.

For the writer, the arguments here set forth lead back to his previous conclusion: that an application for patent rights on socially important inventions, far from being unethical and infringing on the public welfare, is right and wholesome. Any other procedure is negligent, unsound, and prejudicial to the general good. He believes that the new housing industry that is imminent in this country can develop and function only through the stimulus of invention and the protection afforded by the patent law.[5] The patent rights he holds are, first, the basic

[5] Jerome, Harry, "Mechanization in Industry" (National Bureau of Economic Research, Inc.), Chap. IX, p. 330: "There are two prerequisites for change in industry and technique. First, certain scientific and engineering principles must be evolved; second, their application must be commercially feasible."

patent covering the cubical modular method; second, those on specific structures. The latter he plans to handle in the customary way. Such procedure seems certain to supply the soundest means of development for the basic idea. Usefulness and validity require the tests of commercial working and court action, and for the time being the basic patent will be administered in the usual way. But when its value and validity have been established and capital appropriate to initial development provided, the author intends wholly to divest himself of financial interest in the patent, country by country, and turn it into channels of public benefit.

A plan for licensing, such as Dr. Karl T. Compton defines [6] as " the only efficient method of administering funds for scientific research," would permit the active use of the cubical modular method by all applicants on an absolute equality and at minimum royalties. Control could be vested in a responsible board of scientists, technicians, and others officially concerned with problems of housing provision. It is the author's hope and belief that an initial private control of the method, under patent protection, followed by wide but controlled use under impartial administration in the interest alike of community and individual, will promote housing advance and the general welfare.

[6] " Put Science to Work," Technology Review, January, 1935.

CHAPTER XI

Social Significance of the Cubical Modular Method

HISTORY shows that the broad social consequences of a technical innovation often surpass the expectation of the inventor. Prophecy is unwise, but an optimistic forecast of the rationalization of the house as it is prefigured in this book may be allowed.

The technical proposals for the solution of the housing problem that have been set forth in detail and at close range must in closing be viewed in a perspective of their economic and social significance.

Complete rationalization of housing must broadly satisfy many requirements. The matter is so fundamental to human life that it has many bearings — social, economic, political, as well as industrial and technical. In all these aspects there is dire need of improvement, as the depression has made only too manifest. While it is impossible to separate political from economic considerations, there must in this book be an effort to do so and to subordinate the political. Obviously, political leanings affect opinions, and make many questions undesirably controversial. Moreover the strictly political aspects of housing are bound to be temporary or local.

It is obviously an obligation of government to direct and control matters of broad community interest, to protect property rights and obligations for the benefit of society, and to absorb certain losses, physical and social, due to obsolescence. But it is very difficult to determine, even as a matter of opinion, just

where direction and control by a central government should shift to that of a local group or of private interests. The control of regional planning, as well as town planning, is clearly a government obligation. In the particular problem of housing provision, the author can see no reason for the federal government to make grants, or even loans, for improvements within a state, whether or not it retains control over such improvements. Developments in housing are tied to the land and are available only to the people of that state; and financial assistance by the federal government should logically be confined to the broad funding of mortgage obligations through subsidiary agents, whether of state governments, loan associations, or private persons. Certain matters of national or inter-state development, such as traffic and transportation, call for a national distribution of cost. That there should be a classification and differentiation of these governmental obligations is becoming apparent. The writer's own belief is that government aid to housing is sound when it consists in regulation by zoning, health ordinances, and uniform building codes, in developing and conserving credit, possibly by self-liquidating loans at low rates on the cost of construction. This type of aid best serves to develop the economic resources on which the state depends. To mitigate what is known as technological unemployment, not less but more inventions and improvements are wanted. Let the federal authorities foster individual initiative and aid industrial advance through a wiser, more expert and progressive administration of the patent law. Let the government revive and coordinate research facilities — "put science to work" — both as an emergency and a permanent policy. Dr. Karl T. Compton proposes a government program for coordinated scientific contribution to industrial, agricultural, and social progress, and says in particular:

"New housing is being urged as a means of providing employment in the building trades and heavy industries. Schemes of financing and of organization do not seem to bring about the desired activity in this field. Why not? Principally because the building art has not

developed technically to the stage of producing a satisfactory house at a sufficiently low cost. What is basically needed is research on building materials, designs, and methods of fabrication." [1]

The cubical modular method is not a depression cure or a device to stimulate business. It is not confined to present times of crisis but moves on into future developments and new conditions. It is a new conception of structural design. It does not change the theory of structure, but proposes to change the making, assembling, and erecting of houses. Its processes are not limited to this or that material, but, being based on rectangularity and the cube, they can be adapted to the widest variety of substances.

The house that the method can produce need not be of any one material or any fixed combination of materials. It can be built of whatever may be suitable for the climate and the landscape in which it stands, and for the social group to which its owner belongs. The large house on the border of a stream need not resemble the small one on the shoulder of a mountain, yet both can be of modular structure. The modular house does not mean a house of one elevation and plan, or a choice of four or five plans. Modular design means all plans and any plans. It means no one size for all housing, but housing of every size and for every group — apartments, club-houses, bungalows, mansions, small city dwellings and huge country-houses, farmhouses, hospitals. It is a means of providing houses harmonious in appearance, rational in design, logical and integral in structure.

The method suggested here for the provision of housing is specific but it is not intended to benefit any particular person or group. It is not a scheme for politicians or government to exploit, not for architects or speculative builders, not for labor or the low-income groups. It is intended and is available for all — tenants and owners. Eventually, when rationalization has integrated the housing industry as a whole, engineers will be occu-

[1] "Put Science to Work," Technology Review, January, 1935.

pied in designing parts and equipment for house production, transportation, and assembly; manufacturers in producing raw materials and finished parts; architects in drawing plans and correlating use values with esthetics, enlarging the bounds of beauty and communal value; builders, both masters and workmen, in erecting; technicians with research into materials and methods of fabrication; government agencies with codes and standards. And all can work with the same concepts — rectangularity and the cubical module.

This new method not only applies widely to the general need for housing but is widely adapted to present available means for production and erection — it includes a good part of present technique. When it is fairly launched it will provide a stimulus and a challenge to the best technical talent of the country in the immense task of rationalizing the building codes and laws, and also in a continuing responsibility for revision of standards in the light of technological advance. The changes envisaged mean far more than immediate recovery. Such drastic alterations, meeting as they do the demand for a prime necessity, are more than a reform; they are a rebirth. Housing factories can constitute a new industry, and if through the consistent design of houses according to the cube module, such a new industry comes into being, the nation should foster, develop, and utilize it for general economic recovery. A new industry is what the times demand. It could unite labor and capital in a mutually beneficial effort, and encourage managers to give again of their courage and initiative; it could create new social values and promote the general welfare.

The rate of change should not be too rapid; nor will it be. The field is too great, too varied, too complex to be capable of swift reorganization. Yet rationalization, as may be seen in the history of the introduction of all labor-saving machinery, is inevitable, is a profound irresistible certainty, often held back here and there but nevertheless always advancing.

It is, however, a tragic fact that like any fundamental change this one may for a time and to some extent dislocate

business and labor. Building-supply firms, contractors, engineers and architects, and real-estate companies may suffer injury and loss before the necessary adjustments can be effected. The equalizing of the disparity between housing and all other commodities may carry disaster to some individuals because that disparity has been so great. Improved technique in other industries lowered the cost of their products. Housing remained high and, as other commodities dropped, the disparity meant that it could not be exchanged with these other products on favorable terms. Technological backwardness in the past is thus to blame for much of the unemployment in the building trades.

The idea that a new construction process can be carried out with unskilled labor is a fallacy, for any operation of a productive sort always tends to become skilled. In the housing industry the change in procedure as between field and factory will never offer employment to large numbers of unskilled hands.

Technological improvement in the process of providing houses would actually increase employment, because the need for more and better housing is cumulative and because it is possible thereby to cut the present vicious circle. Under present conditions, the high cost of labor and low buying power of wages keep the entire industry unproductive, which in turn keeps cost up and purchasing power down. Unemployment in the entire industry is due to the fact that wages can buy very little of housing that costs too much to produce. Obviously, much labor is at the time of writing unemployed. Some of it could certainly be taken up into housing factories. No " technological unemployment " need be feared. Those now engaged in the building trades could continue in them, doing the same work in the old way until the new system proves itself and draws them into its employ.

There is necessarily an appearance of conflict between the demands of society and those of contractors and labor, and others whose occupations depend upon the old order of things.

Present vested interests, with capital and personnel organized on the old basis, naturally look askance at anything that threatens their continuance in the same routine. Those who have schooled themselves to do a certain job naturally try to thwart the introduction of a new process whereby that job may disappear, not realizing that a new and better one is offered in its place.

But the welfare of society definitely demands better and lower-cost housing. In meeting this demand, individuals here and there will be discommoded, some of them seriously; but the welfare of the community as a whole is bound to prevail against the clamorous protests of certain groups. The needs of the individual are not the apparent demands voiced by labor, but the basic needs of work, a steady job, an adequate house, purchasing power. In supplying the demands of society for better housing and at lower cost, these basic demands of the individual will likewise be met. The new house will be better; it will cost less. Present vested interests will, within a decade, make the necessary readjustments and continue their economic life — and probably with advantage. Laborers in the building trades are now mostly unemployed and earn but little in a year because of wage rates that are excessive in comparison with most other trades and because of wasteful and uneconomic processes in the industry. They will soon find reemployment, steady work — probably largely indoors and under more healthful conditions — and, through increased hours of work even at a lower rate of wage per hour, will earn at least twice what they do now. The increase in hours of work will, of course, be an increase only over the present average for the building trades, and will not exceed that for other trades.

Another gain for the workman will be a cheaper house to live in. Labor will benefit because labor is only the aggregation of laborers, themselves consumers of this universally demanded product. Many factors such as competition, managerial policy in pricing, the bargaining position of labor, may partly determine the matters of labor displacement, increase of profit, and

lowering of price, yet on the whole when housing is brought within the power of mass production there is certain to be a drop in its cost and so an increase in general purchasing power. If purchasing power could get in motion by means of such a far-reaching project as is offered by modular design it would become permanent, economically based purchasing power.

As the output of the new industry increases, a rise in the amount of labor that it employs is at least probable. There is real need for more employment and more buying power, more housing and lower costs. Better productive means, or an increase in the productive efficiency of the building industry, will bring about a lower cost for the product. The savings possible through a rationalized housing industry in the United States have been estimated as one-third of present building costs. These obviously are ultimate, not immediate, savings. It may require a decade to lower the cost of housing; yet that it will begin to drop soon after the rationalizing process is applied, no one can doubt. The demand for houses and yet more houses will absorb the reductions in labor and materials. Great economic benefits will accrue from the widest possible distribution of the savings, which will not be absorbed by any individual or group. In the form of housing there will be an increase of capital goods in similarly wide distribution.

In time the benefits will be general, because social forces are implicit in the irresistible movement of rationalization. Wider, more ample distribution of the necessaries of life among the people is direly needed in these times. Such distribution, just as it has its own share of labor, must have its own technique, which will be developed by the catalytic agent here offered — the cubical modular method — as the means of crystallizing the disorganized building trades into order and harmony with other industries and with modern science. In that process, technical significance becomes economic; and, in turn, economic becomes social significance.

The social implications of the rationalization of housing are

too vast and too complex to be covered even in outline, but they are very obvious, though open to differing personal interpretations. The economic betterment of the masses through the individual has been the principal motive in all the effort that this volume brings to a head, and if the cubical modular method seems to be focussed unduly upon the single-family, detached house it is because the solution for that item applies to every other, and so in the widest possible way to the need of the lower-income group. The author has never ignored that need. Whether impoverished families dwell in shacks, bungalows, three-deckers, old-law tenements, or decayed brownstone mansions, what they want is more adequate shelter, better standards of living, more purchasing power; and their wants must be supplied. The new industry that can supply them will satisfy the oldest human need and the latest demand of this era of despondency.

We have passed through a chaos in which men did not know what they wanted. Gloomy utterances have been plentiful. One philosopher [2] who denies progress is yet willing to admit that "humanity only advances in so far as it accumulates knowledge and the instruments of living." Technology is a branch of knowledge, and what more important instrument of living can be named than a man's home? In the confusion that possibly precedes recovery it is significant that architects, or at least many of them, are distinctly optimistic. They see something to do and new ways of working. Almost unlimited resources lie before them in new technique, new materials, new beauty, and opportunities for social invention. Architecture is the most corporate, most social of all the arts. It may well be entering a glorious phase — all the more probably if in these days of incipient change it prepares to concentrate upon the homes of the people.

Inspiration, freedom, and order for designer and maker, organization and recovery for the community, dignity, decency, and integrity for the home — these are reasonable results to be

[2] Dean Inge.

expected from the reconstruction that modular design can make possible. The claims made for the cubical modular method in particular, complete and far-reaching as they are, may be briefly stated — the cubical module offers a means to rationalize housing.

APPENDIX A

Rectangularity of Housing

To even the casual observer it is evident that in dwellings throughout the civilized world rectangularity is a dominant characteristic both of volume and of structure. The purpose of the study here presented is to determine, with approximate accuracy, the actual percentage of rectangularity in housing, measured both in terms of volume and of structure. The percentages quoted in the text on pp. 27–30 were deduced by the methods described below.

Rectangularity of Volume

The question of rectangularity of volume is somewhat easier to approach than that of structure, and fortunately, from the data acquired in connection with the study of volume, estimates may be made as to structure. A careful description of the method of studying volume will therefore explain most of the method of studying structure as well.

It is well known that higher percentages of rectangularity of volume are found in multi-family dwellings than in single houses, and that two-family houses probably occupy an intermediate ground. A thorough statistical study might, then, be achieved from two sorts of data, one giving the percentage of all housing assignable to each of the various types, and the other the percentages of rectangularity of each. Data of the first type, for the United States, are available from the United States Census of 1930, and for some other countries from corresponding sources. Data of the second type are, however, non-existent. Observation had to be substituted for published statistics, yet only the small scope of the survey qualifies the validity of extending its findings to a wider area.

As a first assumption, it was held reasonable that the great diversity of the climate and topography of the immense area of the United States furnishes a variety of dwellings in a proportion comparable to that in other parts of the civilized world, and that therefore conclusions as to the United States would be roughly valid for other sections. The reader who rejects this hypothesis will consider the following figures as applicable only to the United States.

The area selected for study was Metropolitan Boston, which has a wide variety of suburbs, housing people of wide diversity of income and taste. On the basis of this survey, similar percentages for other sections of the country were estimated on the following assumptions. First it was assumed that the geographical divisions of the country as adopted by the Census might conveniently be grouped into three general sections, North, South, and West, and still represent the essential diversity that exists. When one travels through the United States one realizes that between New England and the Middle Atlantic or the North Central group there is not sufficient consistent differentiation in architectural types to affect the percentage of rectangularity in each division. There are Colonial and Georgian houses in Minnesota as well as in Maine, and English houses indiscriminately in Kansas and Rhode Island. Few sections have indigenous types such as the pueblos of Arizona and New Mexico, the Spanish houses of California, the Georgian of Virginia, the Dutch of New York and Pennsylvania, and the Cape Cod and Early American houses of New England. Moreover, even in those sections where examples of pure native architecture are abundant, they are outnumbered by poor imitations or obsolete examples from the last century. Hence it was considered justifiable not to draw a fine line between New England and the Middle West, or between North Carolina and Arkansas, and a simple classification was made, based mainly on climate and its effects on basements, roofs, height of stories, and general architectural type. The application of the figures to the nation follows the Boston survey.

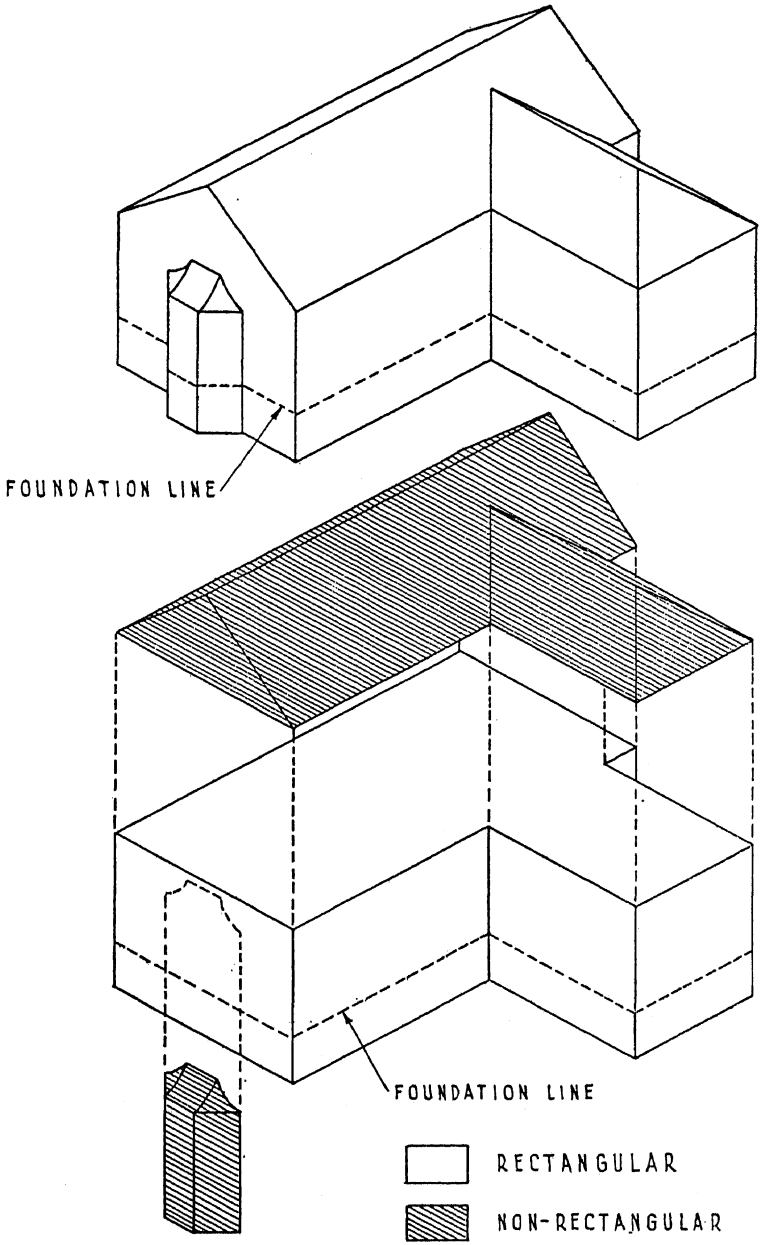

PLATE A. ISOMETRIC OF TYPICAL HOUSE, SHOWING VOLUMES THAT ARE NON-RECTANGULAR

The Boston Survey

The volume or total mass of a dwelling [1] was taken to include the entire building conceived as a solid block. All non-rectangular forms, such as pitched roofs, bow windows, towers, and acute or oblique intersections of walls, were considered in volume and deducted from the total volume to give the resulting rectangularity of volume (Plate A). After the necessary observations were made, arithmetical computation determined the percentages.

Properly to determine the percentage of rectangularity of volume for a section, the house must be classified as follows:

1. Single, duplex, or multi-family (United States Census)
2. Number of stories, including basement (observation)
3. Type of roof (observation)
4. Type of structure (observation)
5. Departures from rectangularity, other than roof (observation)
6. Architectural type (observation)
7. Age (observation)

In determining the field for observation, areas were studied that furnished a sufficient variety in a wide range of living standards to define both the common type of single- and multi-family housing and also to represent the trend in newly developed sections. In each district a number of adjoining and typical streets were studied, the features listed above for every dwelling on those streets being noted. The observations were made by Frederic H. Keyes and Prentice Bradley, of the author's organization.

In order that the tables of rectangularity might conform to the Census classifications, all dwellings were grouped in the three general classes; detached, two-family, and multi-family. In order to take account of variations in design within these groups, an architectural classification was adopted.

[1] "Dwelling" is used in this study, as in Volume II, in accordance with the definition of the United States Census, to mean "a place in which one or more persons regularly sleep. It need not be a house in the usual sense of the word. A boat, a tent, or a room in a factory or office building, although occupied by only one person, is also counted as a dwelling; while, on the other hand, an entire apartment house, although containing many families, constitutes but one dwelling." (Fifteenth Census of the United States, 1930, Population Bulletin, Families, United States Summary, p. 10.)

TABLE I

SURVEY OF HOUSE TYPES
(METROPOLITAN BOSTON)

Architectural type, single houses only	*Average number stories with basement*	*Average type roof*	*Average structure*	*Bow window etc.*	*Present demand*	*Per cent rectangularity of mass*	*Number of examples*	*Per cent of total number*	*Per cent of total rectangularity*
Colonial.....	3	Hip and gable Mainly gable	More wood than brick	25%	Very good	88	60	27.6	24.3
Dutch.....	3	Gambrel	Wood	——	Very little	82	2	1.0	.8
Georgian.....	3	Hip and gable	Brick	10%	Fair	90	5	2.3	2.1
Early American	3	Gable	Wood	——	Fair	78	5	2.3	1.8
Cape Cod.....	2	Gable	Wood	——	Good	80	5	2.3	1.8
English[1]	2½	Gable	Brick	10%	Good	72	15	6.9	5.0
Half-timber[2]...	2½	Gable	Brick, wood, stucco	10%	Good	76	10	4.6	3.5
Norman.....	2½	Hip	Brick	——	Very little	78	1	.5	.4
Italian.....	3	Hip	Wood and stucco	——	None	90	3	1.4	1.2
Classic.....	3	Hip and gable	Wood	——	None	89	5	2.3	2.1
Victorian[3]	3½	Mainly mansard	Wood	75%	None	84	25	11.5	8.8
Bungalow[4]	2	Gable	Wood	——	Poor	78	5	2.3	1.8
Contractor[4] ...	3	Mainly gable	Wood	50%	Good, favoring Colonial and Cape Cod	85	75	34.5	29.3
Modern.....	3	Flat	Steel and stucco	——	Poor	100	1	.5	.5
Totals.....								100.0	83.4

[1] Brick or brick and natural-edge boards.
[2] Wood and stucco with or without brick.
[3] Miscellaneous, before 1900.
[4] No period or style classification.

This classification, with the figures for single-family houses in the area studied, appears in Table I.

The resultant percentage for the detached house was then taken, with similar percentages for two-family and multi-family dwellings, to obtain a final single figure for the Metropolitan District, a figure arrived at by multiplying the percentages of rectangularity for each type by the 1930 Census figures for percentages of types. Except for the fact that architectural character was not a significant factor, the percentages for two-family and multi-family dwellings were found by the same method as that illustrated for detached houses in Table I, and the results appear in Table II.

TABLE II

PER CENT OF RECTANGULARITY OF HOUSE VOLUME
(METROPOLITAN BOSTON)

FOR DWELLINGS					
Type	*Per cent of all*	*Per cent of type with inclined roofs*	*Per cent of type with bow windows, etc.*	*Per cent of rectangularity of type*	*Per cent of total rectangularity*
Single-family....	74.9	98.0	80.0	83.0	62.2
Two-family.....	16.0	100.0	50.0	85.0	13.6
Multi-family (apartments and 3-deckers)	9.1	5.0	35.0	98.0	8.9
Totals	100.0				84.7

Inasmuch as apartment houses, of much greater volume than the single-family house, are nearly 100 per cent rectangular, and yet are classed as single dwellings,[2] more accurate figures can be obtained by using the percentages of families living in the different types. These figures are also available from the 1930 Census and are the basis for Table III, which demonstrates that, while the average rectangularity of volume of *each* dwelling in the Metropolitan District of Boston is about 83 per cent, the total rectangularity is over 90 per cent of the total volume of housing in that area.

[2] See definition of "dwelling," p. 306.

TABLE III

PER CENT OF RECTANGULARITY OF HOUSE VOLUME
(METROPOLITAN BOSTON)

FOR FAMILIES					
Type	*Per cent of all*	*Per cent of type with inclined roofs*	*Per cent of type with bow windows, etc.*	*Per cent of rectangularity of type*	*Per cent of total rectangularity*
Single-family....	26.8	98.0	80.0	83.0	22.3
Two-family.....	27.8	100.0	50.0	85.0	23.6
Multi-family (apartments and 3-deckers)....	45.4	5.0	35.0	98.0	44.5
Totals.....	100.0				90.4

Application of the Boston Figures to the United States

Table IV groups states and Census divisions of the country into the three sections chosen for this study. It was assumed that cross-sections based on variations in roof pitch, number of stories, and the use of basements would furnish percentages of rectangularity of volume sufficiently accurate to characterize the housing as between sections. Plate B illustrates these sections and the relative rectangularity for each. Owing to the wide use of basements in the North, it was assumed that single-family dwellings on the average are two and one-half stories high, whereas in the South they are two stories, and one and one-half in the West, where cellars are less numerous. The roof pitch of 10 in 12 taken for the North is a compromise between the steep English types, the common 45-degree pitch of Colonial examples, and the 30-degree pitch also common in Colonial and in Georgian houses. For the South, where examples of both prevail, an average was taken between the hip roof and the gable roof of 6-in-12 pitch, while in the West the low hip type is the average between the flat roofs of the Southwest and the steeper slopes found in the Northwest. As before, the two-family house was considered to be similar in the average per cent of rectangularity to the single house, and the multi-family dwelling close to 100 per cent rectangular in volume throughout the country.

NORTH

84%

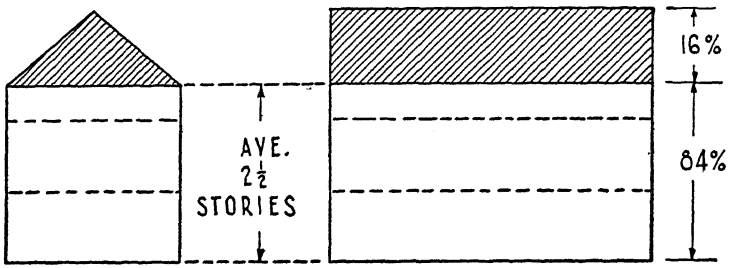

AVERAGE ROOF - GABLE 10 IN 12 PITCH

SOUTH

89%

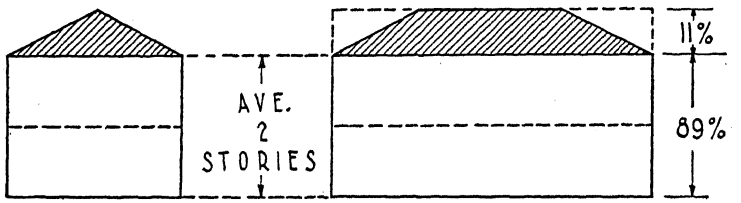

AVERAGE ROOF - BETWEEN HIP & GABLE 6 IN 12 PITCH

WEST

95%

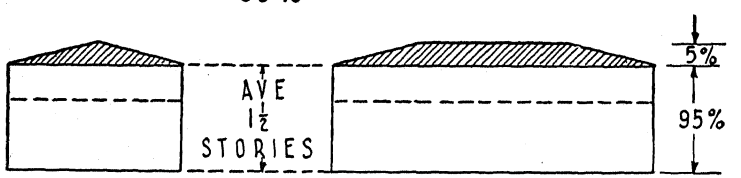

AVERAGE ROOF - HIP 3 IN 12 PITCH

PLATE B. CROSS-SECTIONS OF TYPICAL HOUSES FOR THREE GEOGRAPHICAL SECTIONS OF THE UNITED STATES, SHOWING PERCENTAGE OF VOLUME THAT IS NON-RECTANGULAR

TABLE IV

GEOGRAPHICAL CLASSIFICATION OF STATES IN THIS SURVEY

Section	*Census division*	*States*
North	New England	Maine, N. H., Vt., Mass., R. I., Conn.
	Middle Atlantic	Pa., N. J., N. Y.
	E. N. Central	Wis., Mich., Ill., Ind., Ohio
	W. N. Central	N. D., S. D., Minn., Neb., Iowa, Kansas, Mo.
South	South Atlantic	Fla., Ga., S. C., N. C., Va., W. Va., Md., Del.
	E. S. Central	Ky., Tenn., Miss., Ala.
	W. S. Central	Okla., Ark., La., Texas
West	Mountain	Mont., Idaho, Wyo., Nev., Utah, Colo., Ariz., N. M.
	Pacific	Calif., Ore., Wash.

TABLE V

PER CENT OF RECTANGULARITY OF HOUSE VOLUME
(UNITED STATES)

FOR DWELLINGS				
Section	*Type of dwelling*	*Per cent of all of type in country*	*Per cent of rectangularity of type*	*Per cent of total rectangularity*
North	Single-family	54.5	84	45.8
	Two-family	74.6	85	63.5
	Multi-family	82.3	98	80.6
South	Single-family	33.4	89	29.8
	Two-family	20.5	90	18.5
	Multi-family	11.0	98	10.8
West	Single-family	12.1	95	11.5
	Two-family	4.9	95	4.7
	Multi-family	6.7	99	6.6
Total	Single-family	90.6	87.1 or 45.8 + 29.8 + 11.5	78.9
	Two-family	6.9	86.7 or 63.5 + 18.5 + 4.7	6.0
	Multi-family	2.6	98.0 or 80.6 + 10.8 + 6.6	2.5
Average rectangularity of all dwellings				87.4

Tables V and VI give the results of these calculations. Table VI, using the number of families instead of the number of dwellings as the means to a closer approximation of the per cent of rectangularity of total volume, shows but a slight increase over

TABLE VI

PER CENT OF RECTANGULARITY OF HOUSE VOLUME
(UNITED STATES)

FOR FAMILIES				
Section	*Type of dwelling*	*Per cent of families in different types*	*Per cent of rectangularity of type*	*Per cent of total rectangularity*
North	Single-family	54.5	84	45.8
	Two-family	74.6	85	63.5
	Multi-family	83.2	98	81.6
South	Single-family	33.4	89	29.8
	Two-family	20.5	90	18.5
	Multi-family	8.7	98	8.5
West	Single-family	12.1	95	11.5
	Two-family	4.9	95	4.7
	Multi-family	8.1	99	8.0
Total	Single-family	76.4	87.1 or 45.8 + 29.8 + 11.5	66.5
	Two-family	11.6	86.7 or 63.5 + 18.5 + 4.7	10.1
	Multi-family	12.1	98.1 or 81.6 + 8.5 + 8.0	11.9
Average rectangularity based on families				88.5

the average dwelling per cent of rectangularity for the entire country.

This analysis indicates, therefore, that approximately 88 per cent of the volume of all American housing is rectangular.

Rectangularity of Structure

Analysis of rectangularity of structure is considerably more difficult than that of volume, but in general the same methods were employed. A typical house structure was carefully analyzed, a house without any special non-rectangular features such as dormers or bow windows. This figure, establishing the percentage of

rectangularity for a simple house with a pitched roof, was then corrected for dormers and again for additional cellar space. The resulting figure for rectangularity of the detached house was used in connection with Census statistics for detached and two-family houses, while a different figure for rectangularity of structure was employed with the Census figures for the multi-family house.

Basic Rectangularity of Detached House

For the basic study it was assumed that for the most conservative approach the northeastern section of the country, which has the lowest percentage of rectangularity of volume, should provide the house to be studied. The house chosen was of average small size, 24′–0″ x 36′–0″ on the ground. A hip roof rather than a gable-end roof was chosen as affording more non-rectangular parts, and a pitch of 45 degrees was selected. Though this is a very usual pitch for hip roofs, it must be recognized that other angles would give a greater or less percentage of non-rectangularity.

Structure was considered as independent of finish, and included all frame members, wall and roof sheathing, and the rough floor. Such parts as braces, ribbons, bridging, and rafters or fire stops were counted as frame members. As a first step in the procedure, the parts of each type were counted, and these numbers appear in the third column of Table VII. The next step was to count the non-rectangular parts in each group, any part being called non-rectangular if it departed in any respect from 100 per cent rectangularity. These figures appear in the fourth column of Table VII.

Examination of the superstructure of the house indicates, however, that even the non-rectangular parts are in volume largely rectangular. It would clearly not be correct to regard the non-rectangular parts as 100 per cent non-rectangular. Consequently, the next step was to determine the percentage of non-rectangularity in the non-rectangular parts, and these percentages are given in the fifth column of Table VII. The percentages for sheathing would be higher if underflooring and sheathing were laid diagonally, as is done sometimes in high-grade houses. Any error in the direction of a higher degree of rectangularity than actually exists,

due to disregard of diagonal sheathing, is more than compensated for by the conservative estimate of each part as equivalent in volume. Bridging, for example, has a rather high degree of non-rectangularity, but the total amount of material is small as compared with that in the totally rectangular studding. None the less, there has been no attempt to weight for size because of the difficulty and because the error would result in greater rectangularity rather than in less. All pieces in the structure are therefore given equal value.

TABLE VII

PER CENT OF RECTANGULARITY OF HOUSE STRUCTURE
(ANALYSIS OF ONE HOUSE)

Group	*Function*	*Number of parts*	*Number of non-rectangular parts*	*Per cent non-rectangularity in non-rectangular parts*	*Equivalent number of non-rectangular parts in columns 4 and 5*	*Total non-rectangularity of whole*
Wall	Frame	415	16	4	0.64	
	Sheathing	440	0	0	0.00	
Partition.	Frame	290	0	0	0.00	
Floor....	Frame	570	400	6	18.0	
	Sheathing	320	0	0	0.0	
Roof.....	Frame	90	90	10	9.0	
	Sheathing	280	280	4	11.2	
Stair.....	Frame	6	6	80	4.8	
Total		2411			43.64	1.81
Total per cent rectangularity of structure						98.19

By multiplying the number of non-rectangular parts in each group by the percentage of non-rectangularity of those parts, it is possible to get a figure representing the equivalent number of total parts that might be regarded as completely non-rectangular. These figures, the result of multiplying the values of column four by those of column five, are given in column six of Table VII. These parts may then be expressed as a percentage of all the parts in the structure, as shown in column seven. The summation of these percentages gives the total non-rectangularity of structure in the house, which is 1.81 per cent. In other words, of the structure of the house studied, 98.19 per cent is rectangular.

Adjustments for Windows and Cellars

Bow windows constitute about 3 per cent of total house parts, and are 87 per cent rectangular. Thus in houses that have bow windows the percentage of rectangularity would have to be reduced by the product of these two figures, or by 0.4 per cent. If this figure in turn be multiplied by the percentage of all houses that have such windows, the reduction becomes negligible.

TABLE VIII

TOTAL PER CENT OF RECTANGULARITY OF STRUCTURE IN THE UNITED STATES

Census	*Dwelling type*	*Per cent of total*	*Per cent of rectangularity of type*	*Per cent of total rectangularity*
For Dwellings	Detached and two-family	97.4	98.2	95.65
	Multi-family	2.6	99.0	2.57
	Total per cent rectangular			98.22
For Families	Detached and two-family	87.9	98.2	86.32
	Multi-family	12.1	99.0	11.98
	Total per cent rectangular			98.30

Dormers reduce the figure more appreciably. If 30 per cent of single-family and two-family dwellings have dormers, and the reduction for dormers in a given building (by a computation similar to the above) is 2.5 per cent, the reduction in rectangularity for all single- and two-family houses will be 0.75 per cent. In other words, the corrected figure for rectangularity of structure becomes 97.34 per cent.

Since 57 per cent of all the dwellings of the country are in the North, and since the roofs of the South and West are more nearly flat with the rectangularity of their structure correspondingly increased, 75 per cent represents a reasonable estimate for the number of dwellings with basements or flat or low-pitched roofs. These easily compensate for the percentage that should be deducted for dormers, and it seems reasonable to return to the

original figure of 98.19 per cent as the percentage of rectangularity of structure of single- and two-family dwellings. In apartments, on the other hand, the rectangularity runs much higher and may safely be taken at 99 per cent.

Total Rectangularity of Structure for the United States

By multiplying the percentages of rectangularity of the various types of dwelling (as in the case of volumetric determinations) by the percentage of each type, the total percentage of rectangularity of structure for the entire country may be obtained. These values appear in Table VIII, which uses from the 1930 Census both the percentages of dwellings and the percentage of families housed in such dwellings. The latter figures naturally result in a slightly higher percentage of rectangularity of structure, but as in the case of volume they are believed to give a result nearer to the facts. In either case, the total rectangularity of structure exceeds 98 per cent.

APPENDIX B

Comparative Costs of Inclined and Flat Roofs[1]

To make a comparative analysis of costs of roofs, it is necessary to eliminate factors to which no definite values can be assigned. In this analysis the following limitations were imposed:

1. Building costs are those prevailing in New England in the spring of 1935.
2. The building is of such dimensions as not to entail unusual structural problems in the roofing.
3. The life of the roof is to be the same for all types.
4. The sole purpose of the structure included between the ceiling of the top floor and the exterior is to provide protection against the weather.

The first limitation provides a unit of value, and this should make it possible to obtain comparable results in other geographical sections and at other times.

The second limitation eliminates special problems of construction inconsistent with a general survey; in the study in question it results in the choice of a dwelling 28′–0″ x 28′–0″ as a reasonable size for the usual 50′–0″ x 100′–0″ lot.

The third limitation eliminates questions of replacement and upkeep.

The fourth limitation, however, cannot readily be imposed without a consideration of its effects on design and of the useless areas resulting from the use of flat- or pitched-roof types. Forms are not always determined by function, and tradition has always played an important role in styles. Even casual observation can scarcely fail to bring out the influence of tradition upon design; on every hand we may see examples of applied gables, faked cor-

[1] Computed by Ernest N. Gelotte, School of Architecture, Massachusetts Institute of Technology.

nices, unusable dovecots, and the like. Without argument for functional as opposed to traditional forms, it must be pointed out that the pitch or lack of pitch of the roof will result in variations of style to which no definite economic value can be assigned but which appeal to various tastes.

The use of an attic space for storage can be given an economic value and is perhaps more than a result of tradition. It is an important factor in the utility of the house, as will be realized from the fact that approximately 25 per cent of the total floor area in the hip-roof type may be considered as available for storage and in gable-roof types 50 per cent, while the flat roof provides no storage space.

Against this advantage for the pitched types of roof must be placed the fact that the flat roof can serve as play or garden space. The relative advantages of the two types of space will depend to a large degree on modes of living and conditions of environment. In closely settled areas, where lots are relatively small and the house occupies a considerable portion of the lot, it is quite possible that the play or garden area provided by the flat roof will be more desirable than the storage space under the pitched type. In a sparsely settled district, on the other hand, the storage space may seem of much greater importance. For the purposes of this analysis it is assumed that economic justification rather than traditional tastes will determine the final form. In the following tables it will be noticed throughout that the flat roof shows a percentage of saving over the pitched roof, and that this percentage as related to the total cost of the building naturally declines as the building gets more elaborate, but is rarely less than 4 per cent of the total. It seems quite likely that storage space to make up for that lost by the flat roof, and of utility equal to that provided by pitched roofs, could readily be supplied elsewhere in the building for something less than 4 per cent. But if an assignable economic value be given to the storage space, evidently the costs of flat roofs, hip roofs, and gable roofs are very nearly equal, with a slight advantage, if any, in favor of the flat roof.

TABLE IX

One-Story Building (Uninsulated Roof)
Trench Walls — No Cellar

Roof Type	*Roof Cost per sq. ft.*	*Per cent of Cost Cheapest Roof*	*Trench Walls Cost per sq. ft.*	*Story Cost per sq. ft.*[1]	*Total Cost per sq. ft.*	*Per cent of Lowest Total*
Flat	$0.26	100.0	$0.42	$1.44	$2.12	100.0
Hip	0.39	150.0	0.42	1.44	2.25	106.3
Gable	0.44	169.0	0.42	1.44	2.30	108.5

TABLE X

One-Story Building (Insulated Roof)
Trench Walls — No Cellar

Roof Type	*Roof Cost per sq. ft.*	*Per cent of Cost Cheapest Roof*	*Trench Walls Cost per sq. ft.*	*Story Cost per sq. ft.*[1]	*Total Cost per sq. ft.*	*Per cent of Lowest Total*
Flat	$0.31	100.0	$0.42	$1.44	$2.17	100.0
Hip	0.45	145.0	0.42	1.44	2.31	106.4
Gable	0.50	161.3	0.42	1.44	2.36	108.8

TABLE XI

One-Story Building (Uninsulated Roof)
Basement

Roof Type	*Roof Cost per sq. ft.*	*Per cent of Cost Cheapest Roof*	*Trench Walls Cost per sq. ft.*	*Story Cost per sq. ft.*[1]	*Total Cost per sq. ft.*	*Per cent of Lowest Total*
Flat	$0.26	100.0	$0.81	$1.44	$2.51	100.0
Hip	0.39	150.0	0.81	1.44	2.64	105.2
Gable	0.44	169.0	0.81	1.44	2.69	107.1

[1] Exclusive of painting, heating, and plumbing.

TABLE XII

One-Story Building (Insulated Roof)

Basement

Roof Type	*Roof Cost per sq. ft.*	*Per cent of Cost Cheapest Roof*	*Trench Walls Cost per sq. ft.*	*Story Cost per sq. ft.*[1]	*Total Cost per sq. ft.*	*Per cent of Lowest Total*
Flat	$0.31	100.0	$0.81	$1.44	$2.56	100.0
Hip	0.45	145.0	0.81	1.44	2.70	105.5
Gable	0.50	161.3	0.81	1.44	2.75	107.5

TABLE XIII

Two-Story Building (Uninsulated Roof)

Basement

Roof Type	*Roof Cost per sq. ft.*	*Per cent of Cost Cheapest Roof*	*Trench Walls Cost per sq. ft.*	*Story Cost per sq. ft.*[1]	*Total Cost per sq. ft.*	*Per cent of Lowest Total*
Flat	$0.26	100.0	$0.81	$2.88	$3.95	100.0
Hip	0.39	150.0	0.81	2.88	4.08	103.4
Gable	0.44	169.0	0.81	2.88	4.13	104.6

TABLE XIV

Two-Story Building (Insulated Roof)

Basement

Roof Type	*Roof Cost per sq. ft.*	*Per cent of Cost Cheapest Roof*	*Trench Walls Cost per sq. ft.*	*Story Cost per sq. ft.*[1]	*Total Cost per sq. ft.*	*Per cent of Lowest Total*
Flat	$0.31	100.0	$0.81	$2.88	$4.00	100.0
Hip	0.45	145.0	0.81	2.88	4.14	103.5
Gable	0.50	161.3	0.81	2.88	4.19	104.8

[1] Exclusive of painting, heating, and plumbing.

APPENDIX C

Multiple Openings of Various Sizes and Their Relations to Symmetry in Modular Walls

It has been stated in Chapter VII, p. 247, that although in any design there is little flexibility in the wall of a room with but one window, when a number of windows are to appear in a wall much variation is possible.

This will be more clearly realized from consideration of Plates C and D. Plate C shows a number of arrangements for symmetry in a wall an even number of modules wide, and Plate D a number of symmetrical arrangements in a wall an odd number of modules wide. The following conclusions are evident:

Where a single window is to be placed symmetrically in a wall, it must be of the same order of modules in width as the wall (odd or even).

Where two windows are to be placed symmetrically in a wall, they may be of either order of modules in width. But the dividing space must be of the same order of modules as the width of the wall.

Where three windows are to be placed symmetrically in a wall, the center window must be of the same order of modules in width as the wall, while the dividing spaces and the flanking windows may be of either order of modules.

To obtain complete symmetry (of spacing and of window sizes, as well as of the center of the group), the same law as that deduced for a pair of windows applies to all other combinations of an even number of windows; the law deduced for three windows applies to all other combinations of an odd number of windows (other than one). When the number of windows is greater than three, other combinations essentially symmetrically may be worked out. For example, with four windows in a wall of even-module width, the space

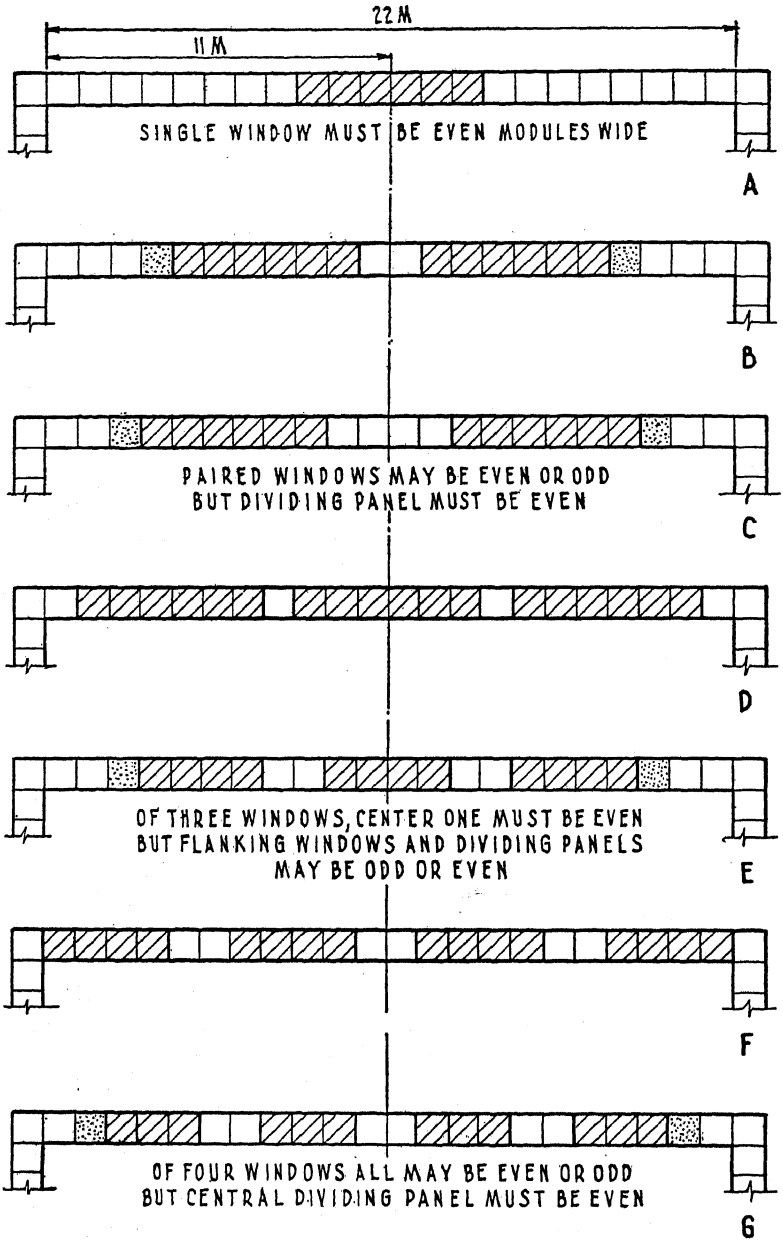

PLATE C. COMBINATIONS OF WINDOWS SYMMETRICALLY LOCATED IN A WALL AN EVEN NUMBER OF MODULES WIDE

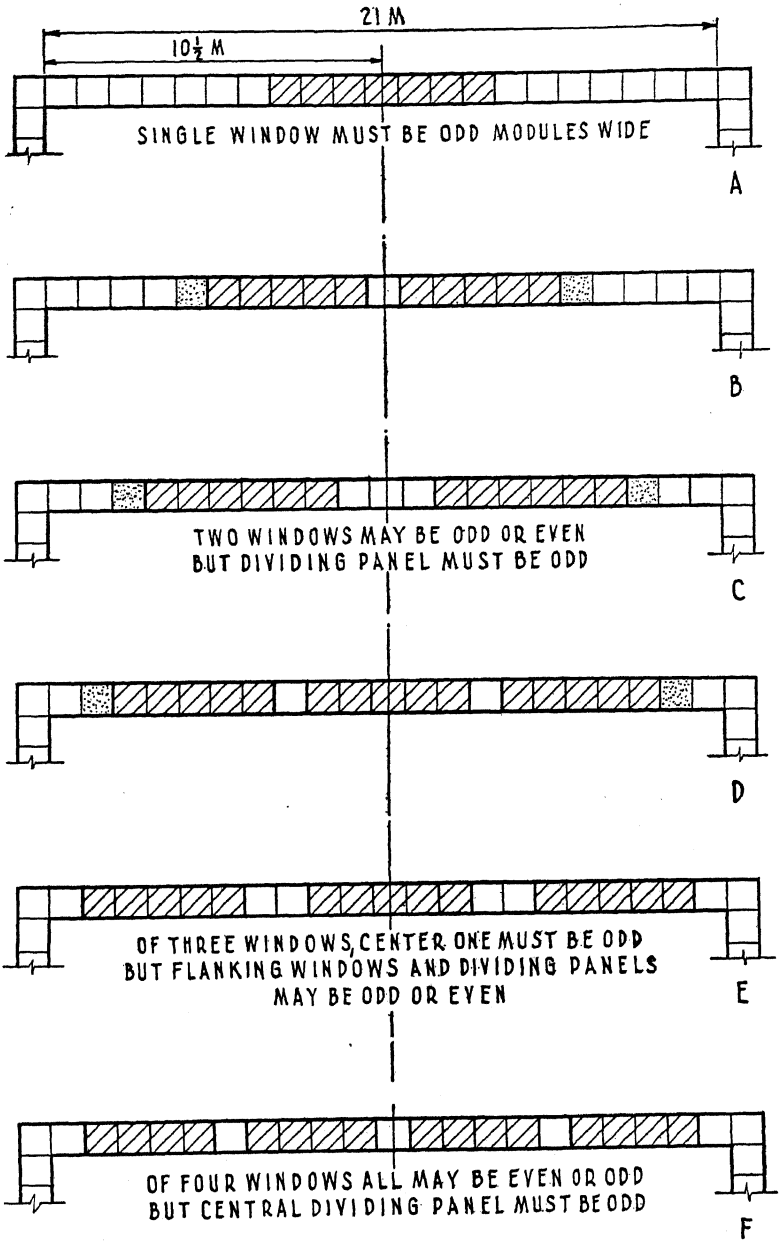
21 M
10½ M
SINGLE WINDOW MUST BE ODD MODULES WIDE
A
B
TWO WINDOWS MAY BE ODD OR EVEN
BUT DIVIDING PANEL MUST BE ODD
C
D
OF THREE WINDOWS, CENTER ONE MUST BE ODD
BUT FLANKING WINDOWS AND DIVIDING PANELS
MAY BE ODD OR EVEN
E
OF FOUR WINDOWS ALL MAY BE EVEN OR ODD
BUT CENTRAL DIVIDING PANEL MUST BE ODD
F

PLATE D. COMBINATIONS OF WINDOWS SYMMETRICALLY LOCATED IN A WALL AN ODD NUMBER OF MODULES WIDE

between the two middle windows must be an even number of modules, but the flanking spaces may be either even or odd.

Thus it is seen that with multiple groups of windows almost any desired degree of symmetry may be obtained; and that where a single window must be centered in a wall, three adaptations are possible, two of which will produce symmetry while the third will closely approximate it because of the small dimension of the module.

APPENDIX D

Modular Patents

List of countries in which the cubical modular method has been patented, together with the patent numbers.

Argentina	31,905
Australia	19,781
Austria	127,208
Belgium	359,844
Belgium	373,014 [1]
Canada	299,920
Canada	318,250
Ceylon	2,390
Cuba	8,924
Czecho-Slovakia	37,484
Denmark	44,807
France	673,059
France	40,427 [1]
Germany	582,980
Great Britain	312,308
Great Britain	362,575 [1]
India	17,355
Italy	277,925
Mexico	30,331
Netherlands	28,263
New Zealand	62,683
Norway	50,671
Peru	0,839
Roumania	16,765
Spain	112,540
Switzerland	142,076
Union of South Africa	670
United States of America	1,878,367

[1] Patent of addition.

SURVEY OF EFFORTS TO MODERNIZE HOUSING STRUCTURE

by

JOHN BURCHARD, 2nd

TABLE OF CONTENTS

	Page
Foreword	331
The Systems	336
Mention List	590
Questionnaire for Sponsors	600
Bibliography	609
Alphabetical Index	613
Chronological Index	617
Classified Index	621

Foreword

THIS Supplement is the completion of a brief list of pioneering efforts in the redesign of house structure, originally intended for inclusion in an early chapter of the preceding text. During the preparation of that text, current interest in the subject of factory-built houses greatly increased, stimulating activity on the part of a host of designers, whose ideas and plans, in many cases, went far beyond those of the pioneers. Magazines, trade associations, even newspapers began to print digests of the many proposals. As no complete or orderly compilation had been published, and as those proposals most familiar to students of housing were by no means the most fertile, it became apparent that a survey of these efforts would be of value to future investigators. Such a survey could not be included in the main text without overbalancing one section of the book and seriously impeding the flow of thought. It was decided, therefore, to publish the specific information collected as a Supplement available for reference to readers of the text.

Even this assemblage of material, which is believed to be the most comprehensive yet put together, can make no pretensions to completeness. To include in it even the systems known to its author, would result in a monumental and uselessly complex piece of work. To furnish a satisfactory picture of the general results, of the principal approaches to the problem, of the measure of success attained, without exceeding reasonable length, demanded a good deal of selection.

The selection took a number of forms. For example, British systems developed during the post-War housing shortage were so many and yet so similar that drastic curtailment was possible without seriously impairing the picture of the British effort. If in this curtailment a few well-known names have been omitted, the author

still feels that the essential methods employed in Great Britain are adequately covered. Foreign practice other than British has been meager. Continental systems have seldom been thoroughly worked out and have not played an important part in the general housing movement; information concerning them is often scant and confusing. A few salient systems have been selected as signposts.

Less restraint has been exercised in the selection of American systems, but even in this country there have been many more proposals than can be included here. A recent publication of the Portland Cement Association, for instance, contains eighty-four concrete systems. The author has therefore eliminated the thousands of proposals that, as far as he knows, have never gone beyond a drawing or patenting stage (except for a few that have something unique to suggest).

Of the systems included, many have been placed on a mention list. This does not necessarily imply that in the writer's judgment they are less important than systems described in detail. In some instances it has been impossible to get complete data; the sponsors of a few systems have not wished their methods described; in some cases the writer has felt that the principles involved are more clearly demonstrated elsewhere. Injustice may have been done here and there by not giving a full description of some system. The writer is reasonably confident that no American system that has received real publicity or been sponsored by any well-known and responsible person or organization has been omitted.

The general method of presentation is as follows. Adjacent to the text is a drawing of the system under consideration. A heading at the top gives a convenient descriptive name for the system, the name of its sponsor, the date of its first public use, if known, and a classification as to type. A roman numeral indicating this type is given at the bottom of the page, in the righthand corner. When an exact year is given, this is the year that, to the best knowledge and belief of the author, witnessed the first public use of the system in question. The use of two dates defines the five-year period in which first public use occurred.

On the facing page is a textual description, repeating at the top the name, the classification, and the sponsor. This is followed by a brief history of the system, and an explanation of the structure shown in the drawing. In some cases comment is added.

Classification as to type is arbitrary and follows that used by the author in other published work:

I. Pre-cut Lumber.

II. Concrete Formed in Situ. " Concrete " is used in its broadest sense to cover any combination of aggregate with a binder. As a rule the binder is Portland cement, and in almost all cases hydraulic cement, but the classification does not exclude non-hydraulic binders.

III. Pre-cast Unit. This division covers units made in a factory by some form of casting operation. Most of these units are of concrete, but other types are included.

IV. Metal Frames (usually of steel)

a. Skyscraper. The framing elements are the fundamental load carriers, and the intervening materials are of the filler type. In general the spacing is at greater intervals than in normal wood framing, but on the question of spacing alone there is some overlap with b. The test is whether or not the system is of the frame and curtain-wall type.

b. Close-spaced. The spacing is more or less that of wood framing. The materials applied are often load-carrying in their own right, or at least serve to stiffen an otherwise light frame so that it can carry the loads.

V. Panel. Panels are made in the factory and erected on the site. They may vary widely in size. There is some overlap with III.

VI. Unitary. These are systems in which whole rooms are built in the factory and shipped as units to the site.

VII. Suspension. Such systems either employ the general theory of the mast or hang the structure from an internal frame in such a way that the exterior walls need not be load-bearing.

After due deliberation, certain other proposals, principally those involving the use of the cantilever, have been omitted when the sponsors have been found unable or unwilling to explain fundamental structural problems connected with them.

Histories are based on known published facts, supplemented in most cases by a check-up with the sponsors. Since many sponsors have lost their interest in or even repudiated their early efforts, it has not been possible to obtain authentic information in every case. In the main, however, the histories given are believed to be reliable. The fact that some histories reveal lack of commercial success

must not necessarily be taken as an indication of unworthiness. The finest idea may have failed through insufficient capital to push it, through too ambitious early exploitation, through premature introduction to a public not yet ready for it, or through being offered in the midst of a depression that has seriously tested even established companies and their ideas. To ignore commercial success would be equally unwise; hence this phase, where known, is included in the history, and the reader must draw his own conclusions.

The description of the construction has also been checked with the sponsor wherever possible. In order that the reader may form some idea of the validity of the source material, a numbered bibliography has been provided, and the description of each system contains a reference to the sections of the bibliography used in its preparation. The letter " S " indicates that the source of information was correspondence with the sponsor, or printed material issued by the sponsor, or both. Patents listed are those actually used for reference, and do not indicate any attempt to give the patent fence of the systems described or mentioned.

In these respects this compilation is like many others, except in scope, but at this point it diverges somewhat from the usual plan. There has been altogether too much buncombe associated with the factory-built home. Publishers everywhere have accepted too freely the idea of pre-fabrication and have given it much publicity. Students of the problem should consider critically what has been proposed, and this Supplement attempts to make such criticism possible. It would obviously be unfair to include here criticisms of specific systems, as they would represent only the composite opinion of one small group. Instead, this Supplement presents a list of questions that should be leveled pointedly at any system, together with the answers that the writer and his associates deem proper. Where a question seems to need explanation for the general reader, such explanation is added. Any reader who wishes seriously to determine just how completely a system solves the problem may sit with the questions before him while he examines the drawing and description of the structure under consideration. To assist in this study, questions and answers are given in abbreviated form on wide sheets that may be unfolded and read parallel with any page of text.

Following the specific descriptions of systems, and the series of questions and answers, will be found the bibliography referred to. This is followed by three indices to the systems, alphabetical, chronological, and classified. Each contains the names used by the author for the systems, the names of the sponsors, the classification, and the date of first use. Depending upon the nature of the reader's interest in the subject, he will find one or another of the indices of most value.

In addition to the purposes of the book for which this summary was devised, it should serve other needs. For students in the field it may serve as a manual of what has been done. To the general reader, who perhaps is not interested in all the details, it may convey certain useful impressions.

It would seem that no one could read through the list of prominent names and distinguished inventors appearing in the text without some sense of humility. Here is a galaxy of well-known names; here are the fruits of incalculable hours of thought and research by able men; here are ideas that seem to cover in principle almost everything that a human being might conceive in the field of redesign of house structure; here is mute evidence of the expenditure of thousands, nay millions, of dollars, representing the time of many brilliant men and the labor of many others. The total cost of all the effort epitomized here may well be of the order of a billion dollars. Yet, with all this effort, all this ingenuity, all this expenditure, all the support of many wealthy and well-managed corporations, there has thus far been developed no single organization with a nation-wide housing business.

The apparent futility of past endeavors, however, should not be a deterrent. That the problem is not a simple one may be admitted; that it is beyond the scope of human ingenuity cannot be conceded. The public is receptive to the general thesis as never before, and already there is evidence of new approaches. Perhaps in these very pages may be the information or the suggestion on which at last a satisfactory solution may be based.

JOHN BURCHARD, 2nd

BOSTON, MASSACHUSETTS
January, 1936

ALUMINAIRE

TYPE Metal Frame - Skyscraper; and Panel
SPONSOR Kocher and Frey
COUNTRY United States DATE - 1931

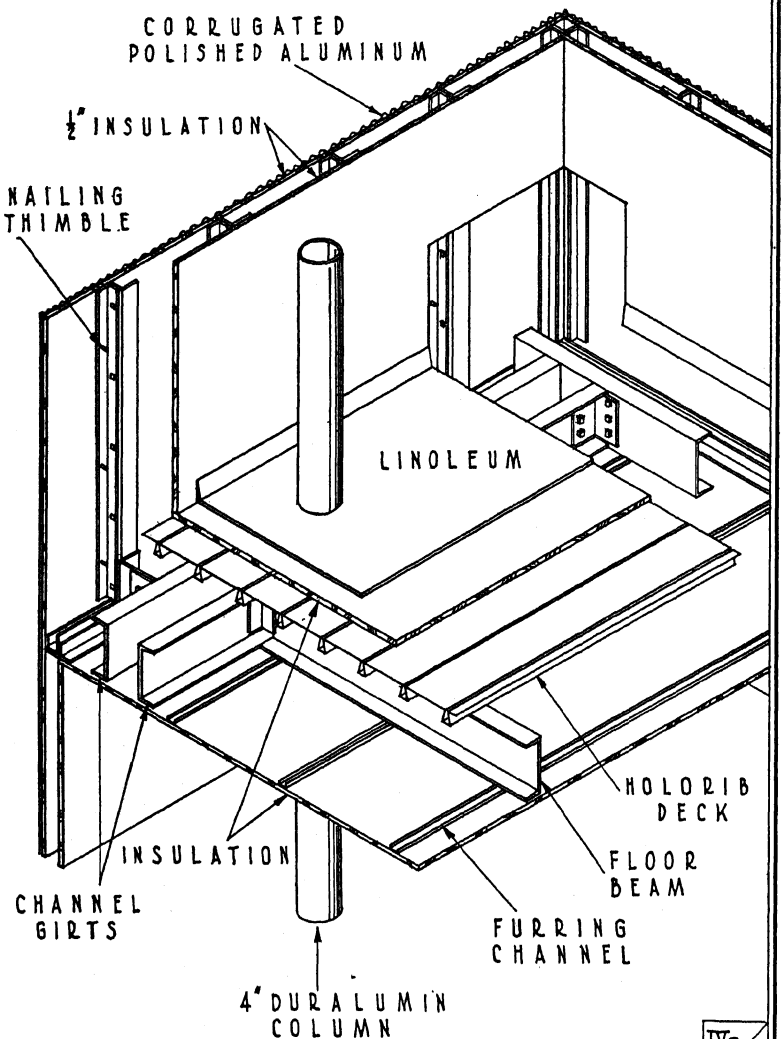

IVa / V

Aluminaire

Type IVa–V. METAL FRAME — SKYSCRAPER; AND PANEL

Sponsors: A. Lawrence Kocher and Albert Frey

History. Kocher and Frey have offered a great many fertile suggestions in the field of the pre-fabricated house. The Aluminaire house was built at full scale (22′–0″ x 28′–0″ and 27′–0″ high) in Grand Central Palace for the New York Architectural League exhibition in April, 1931. It was erected in eight days and taken down in two. In the summer of 1931 it was re-erected as a permanent country-house for Wallace K. Harrison at Syosset, Long Island. The construction system exemplified in Aluminaire has been further refined and is proposed for a group of summer houses at Shelter Island, New York. An experimental house using similar framing but faced with canvas was built at Northport, Long Island, during the summer of 1934. (See Minimal.)

The purpose of the design was to produce a house meeting the needs of present-day life near the city, planned with a view to giving better light and air with mechanical conveniences and efficiency of arrangement, to use standard materials for walls, floors, and framing, and to build the house dry so that no time would be lost between erection and occupancy.

Structure. The building as constructed carried the wall panels to the ground in only a portion of its area. The architecture was modern, with considerable stress on large areas of fenestration and wall space, flat roof decks, sun glass, etc.

Certain aspects of the framing have been retained in subsequent developments by these architects. The entire building is supported on six duralumin columns 4″ in diameter, arranged with one column at each corner and one at the center of each long side of a rectangle. These columns are spanned in one direction by paired 7″ channels bolted tangentially to their faces (steel does not weld readily to duralumin). At the ends of the building the paired channels are headed off by a 7″ cross channel, and other 7″ channels form the floor framing. These channels support the wall

panels and also the floor system. The latter consists of a standard Holorib deck with insulation and linoleum superimposed, with furring channels on the bottom flange which in turn support a ceiling of insulating board. Exterior of the outer of the paired channels, at 16″ centers, two steel angles bolted together form a Z and serve as hangers, supporting Z-shaped studs, also of steel, and also made up of paired angles. The faces of these angles in turn receive insulation outside and inside, nailed to the steel by means of a nailing thimble. The exterior of the house is then faced with corrugated polished aluminum of washboard cross-section. This entire wall section, it must be remembered, is hung from the paired channels. The insulating board is finished in general on the inside with oilcloth in plain colors. These details have been varied slightly from time to time as to floor joists and as to the nature of the studding, but the fundamental principles have remained intact and the drawing shown represents the combination that the sponsors most favor.

Comment. This house is unquestionably thoroughly "dry" in construction. The sponsors have been interested in a number of other constructions, notably a "Low-cost Farmhouse," a week-end house made of stretched canvas, and a hollow-concrete-wall house built for Rex Stout at Brewster, New York. The corrugated aluminum is said to break up the glare, form a waterproof skin requiring little maintenance, and insulate the house by means of reduced radiation. The sponsors estimate the cost of a house of the same size as the one built at Grand Central Palace, containing porch, hall, furnace room, garage, storage room, kitchen, dining, living, and bedrooms, bathroom, library, roof terrace, and shower with toilet, three stories in elevation, at $4,000 if built in quantities. They report considerable elasticity and sway in the structure during erection *until* the wall panels were erected.

Bibliography. 2, 9, 25, S.

American Motohomes

Type V. PANEL

Sponsor: American Houses, Inc.

History. About five years ago, a young architect, Robert W. McLaughlin, Jr., finding that the market for high-priced residences, a field in which he had been particularly prominent, had all but disappeared, determined to crystallize his development of a pre-fabricated house product and to create a demand for it in the small-house field. By 1932 he had formed American Houses, Inc., to conduct the business. The first house was erected at Jeddo, Pennsylvania, in 1932. By the end of 1934 the company had built for customers a number of houses in Greater New York, New Jersey, Connecticut, and Pennsylvania. A very effective publicity campaign was started in 1935 with the display of a house in Grand Central Palace in New York. Although inspection of this house was by invitation only, it was seen by a large number of people and received much favorable comment in the press. A little later a second house, open to the general public, was erected for display in Wanamaker's store in New York. Simultaneously with these displays various magazines and newspapers throughout the country published descriptions of the house, emphasizing pre-fabrication and the completeness of the equipment of modern household accessories. The sponsor reports that a very substantial number of houses have already been ordered and assembled, and that the public reaction to its product is distinctly encouraging.

Structure. The foundation is made of 4″ x 8″ x 12″ concrete blocks and no cellar is provided. The first floor is kept dry and warm by circulating warm air in the 16″ air space under the floor. A substantial skeleton frame is erected, of 2¼″ steel channel studs, spaced usually 4′–0″ apart, and open-truss floor joists. Light metal plates are welded to the channel studs to close the open side. The studs are placed with the plates inside, the edges of the plates projecting far enough to form grounds for the edges of the wall panels. The wall panels, about 4′–0″ wide and of story

AMERICAN MOTOHOMES

TYPE Panel
SPONSOR American Houses, Incorporated
COUNTRY United States
DATE-1932

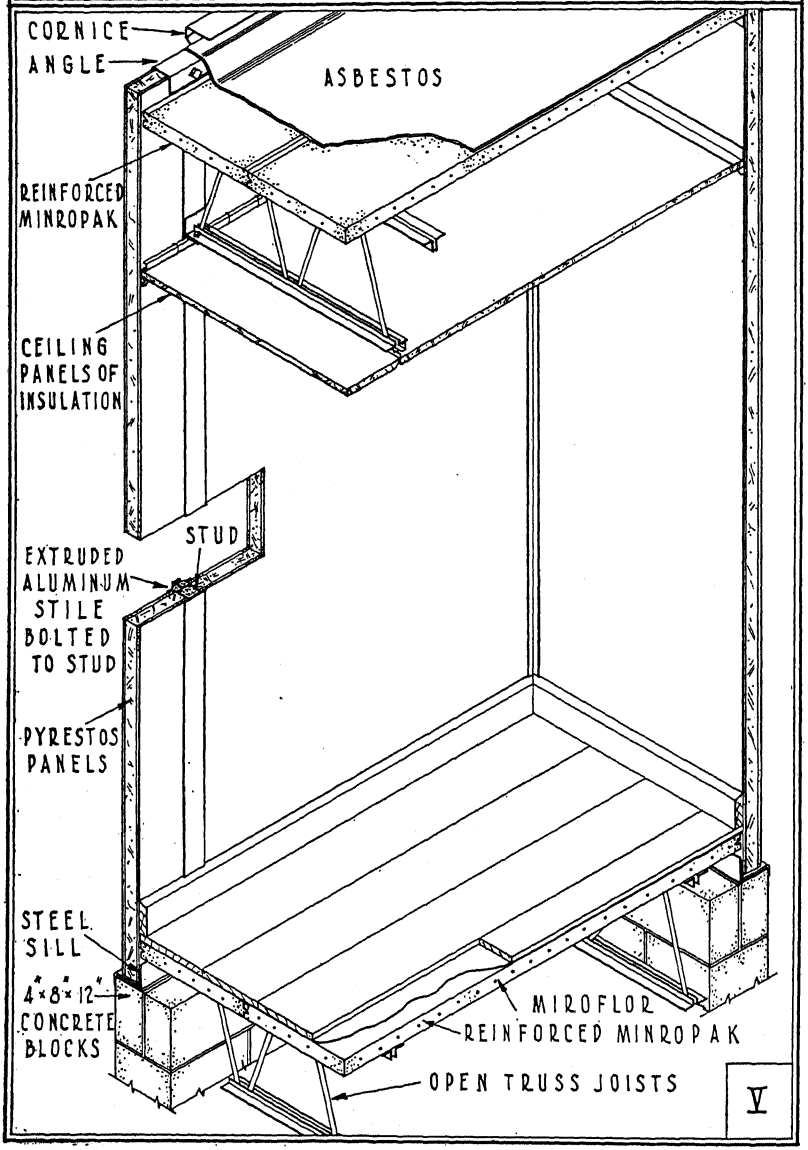

V

height, fit between the studs and are held in position by exterior battens of extruded aluminum, bolted to the back of the channel studs. Insulating washers are inserted between the outer battens and the studs to prevent condensation on the wall framing. The wall panels consist of 2″ of insulation, faced inside and outside with sheets of compressed asbestos and cement.

The joists for the second floor and flat roof are supported by continuous steel angles fastened to the studs. Doors and windows are manufactured as special pre-finished wall units. The wall units extend slightly above the roof to form a curb, being finished on the exterior with a light aluminum strip as a narrow cornice.

Interior partitions are made of large panels of a cementitious product called Minropak, reinforced with steel and held in place by steel channels. Floor slabs of the same material are placed over the joists. A 2″ layer of Minropak is used on the roof for insulation and covered with compressed sheet asbestos and cement. The drainage of the roof is to the center.

Interior walls are finished with a washable covering called Amfab, furnished in attractive designs. Ceilings consist of panels of fiber insulation board painted white. Finish floors are made of a pressed wood fiberboard.

The name "Motohome" is derived from the "Moto-Units" around which the house is built. These units are made in four sections: a kitchen section; a heating and air-conditioning section; one or more bathroom sections; and usually a laundry section. Each of these sections comes to the job complete in a large metal cabinet. The Moto-Units vary in size according to the needs of the various house models. At present, seven models, ranging from a four-room bungalow to a two-story seven-room house with a two-car garage, are offered to the public. It is expected that additional models will be made available as the need arises.

The standard equipment furnished with the house includes all the latest improvements in accessories, and several novel features. The kitchen includes electric refrigeration, indirect illumination, an electric clock, and a power exhaust fan to remove cooking odors. The kitchen is stocked with a supply of staple foods to take care of immediate requirements while the owner is moving in. The air conditioning includes the circulation and filtering of air in both winter and summer. Humidification is provided for winter. Air

refrigeration for the summer is optional. Bathroom equipment includes both tub and shower bath, an auxiliary electric air heater, indirect lighting, and an electric clock. The laundry includes an electric washing machine. Built-in radio, and patented floor lamps that give either soft lighting or a strong indirect light, controlled by a twist of the shade, are also standard equipment.

Comment. In all its publicity, the sponsor emphasizes the house as a finished product, offering definite advantages of comfort and convenience. As little as possible is said regarding structural details. Probably this marketing principle has influenced the company in adopting in many instances new names for materials already known to the trade, as, for example, " Amfab," " Miroflor," " Minropak " and " Pyrestos." Use of such names also facilitates the future introduction of improved materials as they may become available.

American Houses, Incorporated, has done much more than offer a new house construction. It has attacked in a realistic manner the whole problem of pre-fabricated housing, including both the manufacture and marketing. The house parts are delivered to the job with a maximum of pre-finish, carefully ordered and organized for speedy erection. The customer buys a definitely known product at a specific price and receives it ready for use in a reasonable time. The sponsor does not claim to offer a house that is lower-priced than the conventional house of the same size, but does claim more value for the dollar in dependable, durable living comfort.

This system is interesting, not only as a carefully worked-out design adapted to pre-fabrication, but also as a serious attempt to apply modern methods to the problems of selling, delivering, and field erection. To no small degree its commercial success, and hence its ultimate usefulness, will depend upon the economies that can be realized by the use of such methods.

Bibliography. 10, 19, 25, 28, S.

Armco

Type V. PANEL

Sponsor: American Rolling Mill Company, through Insulated Steel, Inc.

History. The first house of this type, designed by Robert Smith, Jr., architect, and Mills G. Clark, engineer, was built by Insulated Steel, Incorporated, in Cleveland in 1932. It was followed by other houses, including the one first built at the Century of Progress in Chicago by American Rolling Mill Company. Subsequent to that building, others have been erected, fairly widespread as to location. The total number of such houses to date does not appear great, nor have there been any radical changes in design.

There has been considerable confusion about sponsorship as between this house, the house of Universal Housing Corporation, and the Ferro-Enamel house. The latter is an entirely separate thing, as described on p. 418, and is related to the building here under discussion only because Ferro-Enamel siding was used on an Armco house. American Rolling Mill sponsorship is confined to the Armco house and to the Universal Housing Corporation house.

Structure. The structure of this house really does represent a new departure in America — the introduction of an all-metal chassis for the house. The building is produced with a relatively small number of parts.

Walls are made up of double-reversed channel sections of wall height. Because of their contour, considerable flexibility of wall dimension may be gained merely by sliding one section over the next one. The sections are of 20-gauge steel, roughly 16″ wide and 2″ thick. Other widths have subsequently been experimented with, including another section consisting of a double double-reversed channel. The sections are arc-welded to each other in the field.

A floor bearing channel, carrying wire conduit, is then welded

ARMCO

TYPE Panel
SPONSOR American Rolling Mill Company
COUNTRY United States DATE - 1932

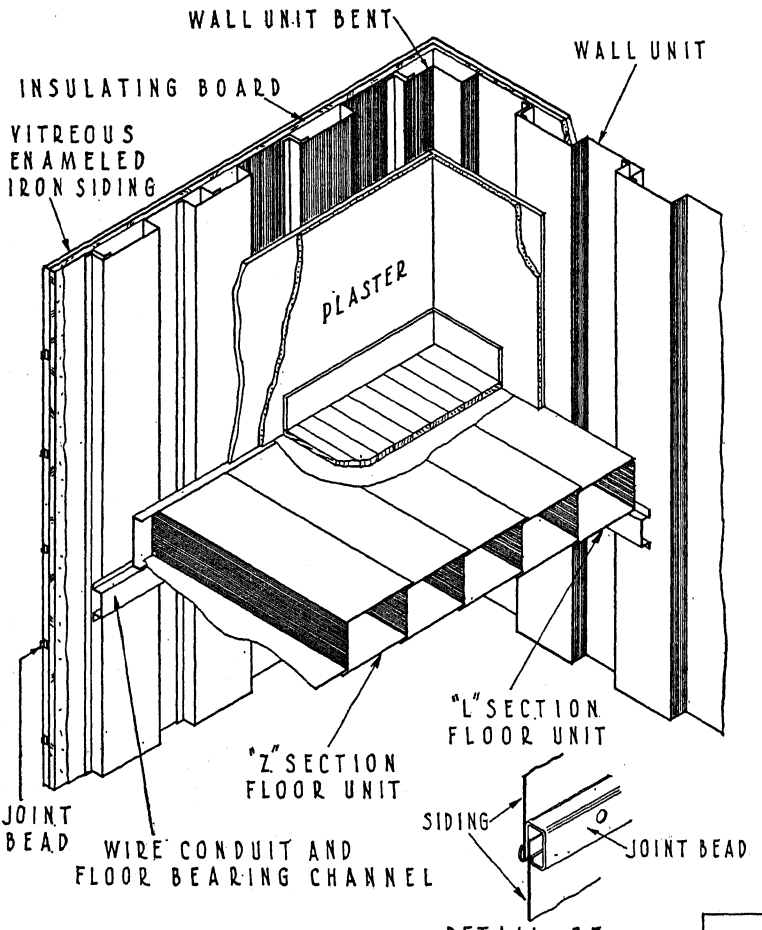

V

to the walls at ceiling level. This serves as the initial support for Z floor-units, normally about 16″ wide and 5½″ deep, and of 18-gauge steel. They overlap as shown in the drawing and are received at their ends in a channel member resting on the wire-conduit channel. They are then all tightly welded together by the use of the arc weld.

This really completes the fundamental structure of the building, and the finishes that might be applied are, potentially at least, optional. In the actual buildings the interior wall surfaces were finished with insulating board and plaster, the board being attached by screw-threaded nails directly to the steel panels. The exterior walls were finished with porcelain siding over insulation board. A rather unique joint element for sealing the horizontal joints between pieces of siding is shown in the drawing. Window frames, door frames, and electrical conduit were installed prior to delivery for erection.

Comment. The system is completely worked out. Its essential elements, when erected, constitute a real chassis for the house, replacing studding, floor framing, bracing, windows, and doors. As developed thus far, units include no finish; a considerable amount of work, comparable to that done traditionally, even though with different materials, is required at the site (finishing ceilings, floors, and walls, and screwing on insulation and siding).

Bibliography. 3, 7, 9, 10, 12, 25, 26, 28, 29, 35, S.

ATHOLL

TYPE Metal Frame - Skyscraper
SPONSOR Duke of Atholl
COUNTRY Scotland
DATE - 1920-25

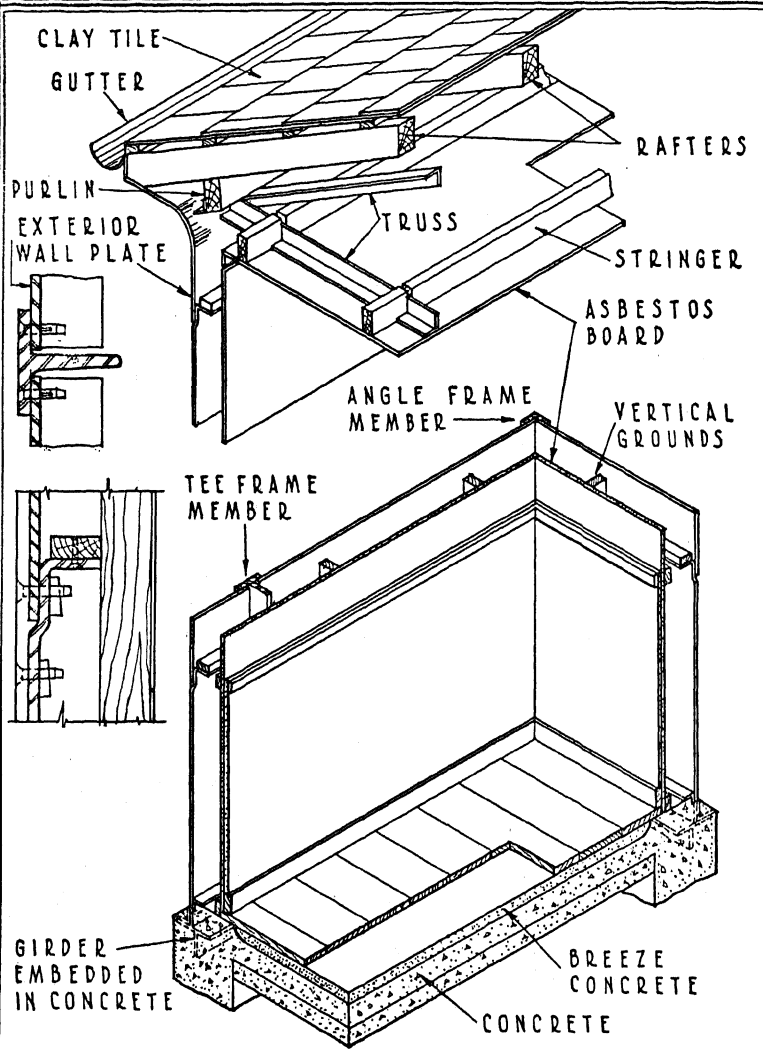

IVa

Atholl

Type IVa. Metal Frame — Skyscraper

Sponsor: The Duke of Atholl

History. One of the attempts in Great Britain to use steel for low-cost housing, under the Government subsidies after the War, was the Atholl type, built by Sir William Beardmore & Co., Ltd., Glasgow, from plans by the Duke of Atholl. This construction was somewhat heavier and more expensive than many of the others tried in England. Like most of the " alternate " constructions, it fell into disuse with the return of house building to private enterprise in Great Britain. (See British Systems.)

Structure. The framing consisted of steel Tee pieces for studs and angles at corners, bolted to a T-shaped sill embedded in the concrete of the foundation. The outside wall consisted of $\frac{3}{16}''$ steel plates, bolted to the inner side of the Tee flanges and the legs of the corner angles. The horizontal joints between plates were formed by recessing the top edge of the under panel to take the overlapped edge of the panel above, and then bending the edge in 90 degrees to form a flange that carried wood nailing strips. Attached to these nailing strips was a light wood framing on which were mounted panels of fiberboard and plaster for interior finish. The outside joints were made weather-tight by strips of lead or asphalt.

The upper-floor loads were carried by I-beams, attached to the webs of the Tee studs by plates or cleats. The roof was carried by transverse rafter trusses of steel, supported directly by the Tee studs with bracing and ties at the eaves level. The ground floor was poured concrete covered with wood flooring.

The inner surfaces of the steel plates were covered with granulated cork to prevent condensation.

Comment. A design suitable for England might not be satisfactory for the severe climate of our northern states. A slow circulation of air through the empty wall spaces was intended. This air would necessarily be warm inside air which would condense on

striking the cold metal. The granular-cork covering might protect the inner panel surfaces against condensation but no mention was made of similar protection on the cold metal of the framing parts.

Bibliography. 41, 42, 43, 44.

Atterbury

Type V. PANEL

Sponsors: Russell Sage Foundation and Grosvenor Atterbury

History. It is impossible, in any such short summary as this, to do justice to the extent of Grosvenor Atterbury's work in the field of pre-fabricated housing. He was a pioneer in the field and in the years 1902–1925, during which his researches were being prosecuted, first entirely at his own expense and subsequently with funds from philanthropic sources (since 1907, principally by the Russell Sage Foundation), he received no compensation for his services. Moreover, the results of the work, including the use of patents, have been offered to any "non-profit institution willing to continue the work along proper lines looking towards a scientific solution of the housing problem." [1]

In 1902 Atterbury began an investigation of current construction methods the world over, which convinced him of the great waste therein. By 1904 he had begun a study of certain foreign attempts to bring about factory production abroad, notably the pre-cast cinder-concrete sections of Brody in Liverpool and the machine-made concrete beams of Vizintini at Zurich. In view of their results, he then began to study possible increase in size from hand units to the most economical machine-handled unit. By 1907 he had applied this study to a series of house and tenement designs and determined what he considered the largest units that, with a minimum of standard and special sections, would execute the designs. Then, in connection with Carnegie Steel Company, he studied available products and materials, and later made tests of experimental designs, materials, and methods. The material for the first demonstration was concrete. Preliminary methods of casting and handling blocks of the required size were developed at full size. Effort was made to eliminate all unnecessary material, to reduce exterior joints to a minimum with no horizontal joints

[1] Quoted from a statement by Mr. Atterbury prepared in August, 1934. It is on this statement that the writer relies for the history here given.

ATTERBURY

TYPE Panel
SPONSOR Russell Sage Foundation and Grosvenor Atterbury
COUNTRY United States DATE.- 1907

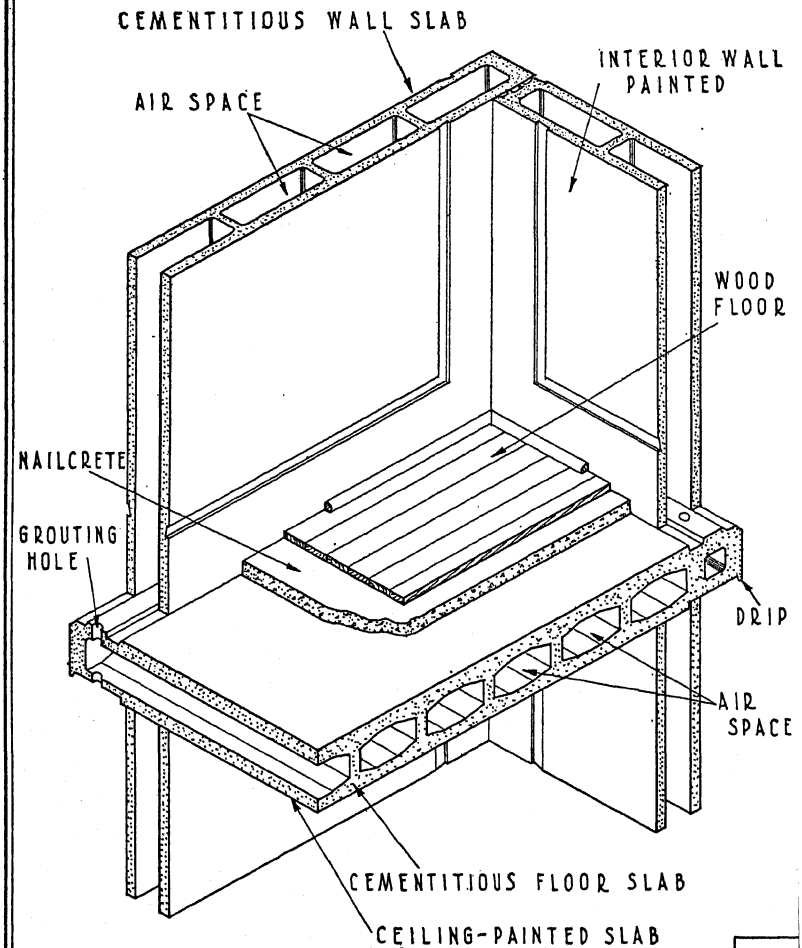

V

except at floor levels, and to fill exterior vertical joints with grouting. The minimum thickness for protection from dampness was determined by field experiment. Waterproofing compounds were never used in the forty-odd houses subsequently erected. This work was followed by studies of exterior design which at first employed rusticated sections but later frankly expressed the units. In 1909, with the cooperation of Professor Pellew of Columbia, the problem of pre-finished color and texture was solved by the use of a brushed surface exposing the aggregate. The plan always contemplated completely finishing the sections in the factory. About 1909 an effort to find a nailing concrete was begun. Six or seven years elapsed before a final solution was found; this became commercially known as Nailcrete. The inventor had never liked Portland cement concrete because of its high density, high conductivity, and slowness in curing and hardening. In 1918, as a result of experiments at Columbia University, Cinderlite, a mixture of gypsum, sand, and cinders, was developed which surpassed cement except that it was susceptible to dampness. A method was developed to waterproof the blocks and cover them with a thin coating of Portland cement, increasing the productivity of molds and the like from fifteen- to twenty-fold.

In 1919 the experimental plant was taken over by the American Car and Foundry Company with the idea of developing the production of standard factory-made units on a commercial basis.

Work at the demonstration plant ceased in 1921 and, according to the inventor, study of the work accomplished to that date resulted in the following conclusions:

1. That the proper method of approach had been found;

2. That at least one specific method of production applicable to successful commercial use had been developed;

3. That the greatest opportunity for further research lay in material that could be cast in required forms and sizes and would combine the functions of such diverse materials as steel, concrete, and wood;

4. That no commercial concern could be expected to solve these problems scientifically, economically, and rapidly with the sole object of creating a new basic industry devoted to the production of minimum-cost housing; that such work could be done satisfactorily only by some non-profit agency.

Therefore, for the past few years Atterbury has directed himself to securing the endowment by one or more of the great philanthropic and educational foundations of some form of research institute of economic housing.

Throughout the course of the early experiments, and quite steadily from 1913 on, houses were built, principally in Forest Hills Gardens, New York.

Structure. It is almost as difficult to describe the Atterbury system clearly in a short space as it is to outline its history. There are relatively few systems in this Supplement at all like this.

In brief, the system is one of pre-cast cementitious blocks, slabs, and foundation pieces, of really considerable size, transported to the site on trucks and erected there with derricks. Thus a single wall panel will be of wall thickness, story height, and 6′–0″ to 8′–0″ in width — equivalent to 800 bricks. Wall panels are generally made of a size to span from opening to opening. Vertical joints are thus confined to the spaces beneath windows or above windows and doors, where smaller panels are used. Such vertical joints as do appear are grouted. Horizontal joints are confined to floor levels.

Floor units of a similar section are also of cementitious materials and span from wall to wall. They are of such size and shape as to project slightly beyond the walls and are provided with a tongue-and-groove arrangement which interfits with a complementary device on the wall panels.

An idea of the size of roof or floor units may be gained from the fact that eight roof panels will cover the entire roof of a generous-sized house.

The system aims at making the units as light as possible by the use of a lightweight composition of gypsum, sand, and cinders, and by making as many voids in the panels as is consistent with strength and other desired properties. About 60 per cent of a wall panel is void. None the less, in view of the size of the blocks, they are necessarily heavy and must be handled in the field and factory by cranes and derricks.

The aim is towards a maximum of pre-finish, which is attained except in connection with the floor. On the exterior the wall panels are waterproofed and skim-coated with cement stucco. On the in-

terior they are painted. The floor is covered on the site with nailing concrete, to which a wood floor is nailed.

Comment. No critic can have anything but praise for the intelligent and patient endeavor of the inventor and for his accomplishment. The large size of his units would seem to make flexibility of design unattainable, but the houses he built at Forest Hills Gardens show considerable versatility of treatment, their construction being governed only by the common factor of the horizontal floor demarcation, inevitable when each floor is a platform reaching to the outside. Certain critics have stated that the joints were not always waterproof and that the machinery and plant made the houses cost over $10,000 each so that they cannot be considered in the low-cost class.[2]

Bibliography. 1, 28, 44, S.

[2] Stone, Peter A., "Experiments with Low-Cost Houses," in General Building Contractor, April, 1932, p. 22.

BANKS

TYPE Concrete Formed in Situ
SPONSOR J. S. Banks
COUNTRY United States
DATE - Unknown

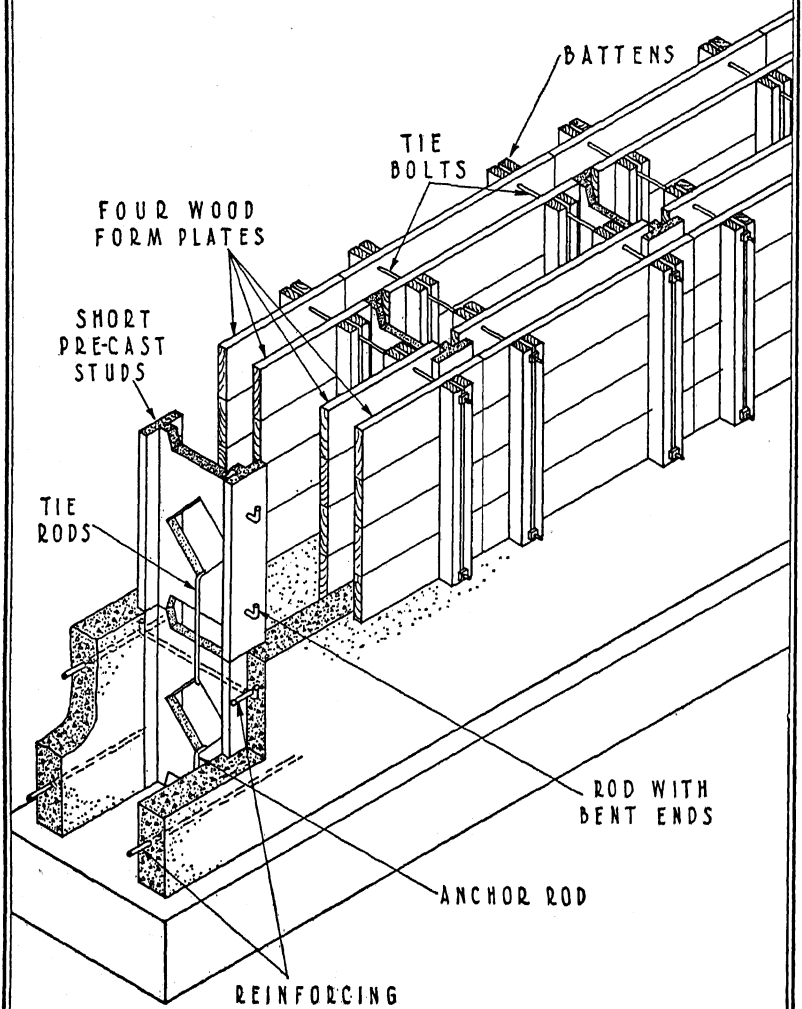

II

Banks

Type II. Concrete Formed in Situ

Sponsor: J. S. Banks

History. This system is listed in the Portland Cement Association Report on Survey of Concrete House Construction Systems, which states that the extent of use is unknown. As far as the author knows, no examples of its use have been recorded.

Structure. The special feature of this monolithic, double-wall construction is a pre-cast concrete stud which ties the two walls together. The studs are cast in short lengths, of an I-shaped cross-section. A diamond-shaped opening is cast in the web of each length; horizontal bars are cast above and below the opening, with ends protruding through the flanges and bent upward to support the reinforcement in each wall. The studs are placed 2′–0″ to 4′–0″ apart, and the short sections, placed one above the other, are tied together by rods with ends bent to hook over the edges of the openings in the webs.

The forms for pouring are made of four horizontal wood panels and vertical battens, of the same height as the stud sections, and of length corresponding to the stud spacing. Successive courses are erected by superimposing stud sections on those below, placing the rod connections, and resetting the forms for the next course. Tie bolts and spreaders are erected between studs, and removed with the forms, to be used again when the forms are reset.

The details of finish, floors, and partitions are not given.

Comment. None.

Bibliography. 50.

BATES

TYPE Metal Frame - Close - spaced
SPONSOR Walter Bates Steel Corporation
COUNTRY United States
DATE - 1925-30

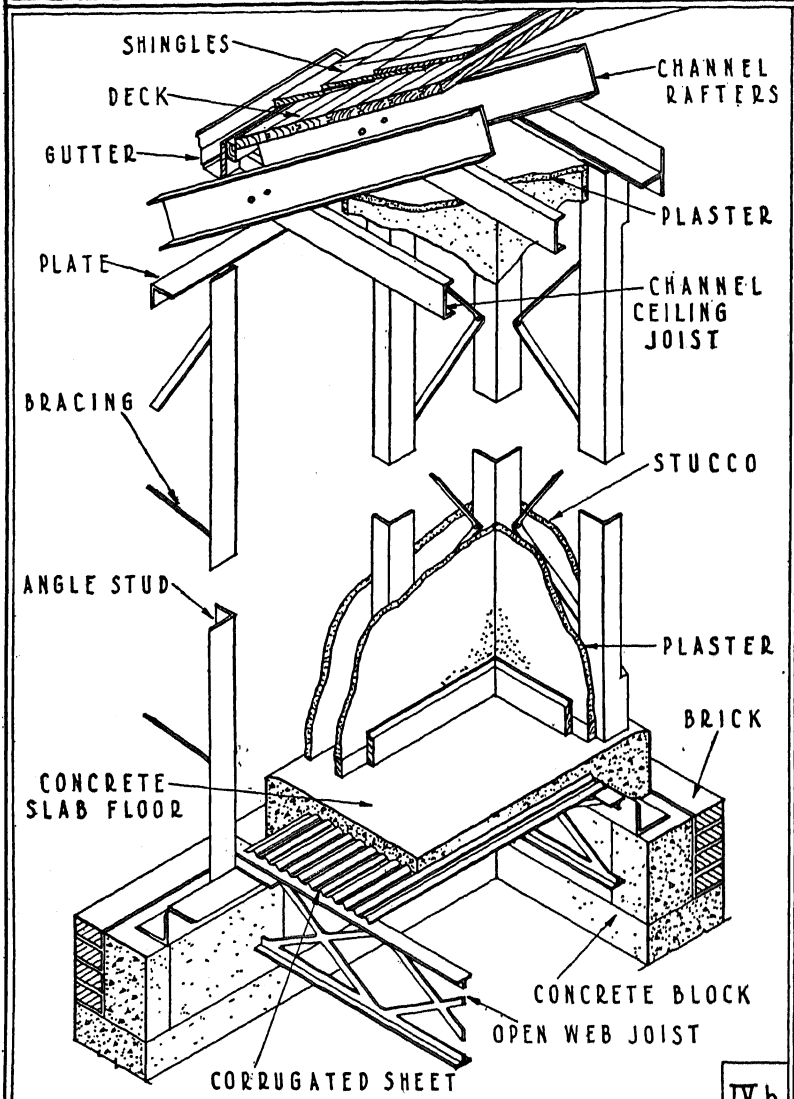

IV b

Bates

Type IVb. METAL FRAME — CLOSE-SPACED

Sponsor: Walter Bates Steel Corporation

History. By 1928 steel manufacturers the country over were engaged in campaigns of varying intensity to sell steel frames for houses. Most of these frames, including the Bates, were of the close-spaced type. One of the first houses built was that occupied by Walter Bates, in Gary, Indiana. A number of other houses were built in different localities. The movement lapsed generally, and, as far as is known, the Bates system is not one of the few steel frames of this type now being actively marketed.

Structure. (See also Broderick, Colorado Fuel, Corkanstele, Steel Frame, and Tappan Frame.) Essentially the Bates system provides merely a frame for the walls, floors, and roof (some systems do not even provide a roof). The collateral materials are subject to wide variation.

Heavy angles are anchored to a proper brick or concrete foundation by anchor bolts. The studs are structural angles with a very novel bracing feature taken directly from the angles themselves. A vertical slot is cut on one leg, about 2″ from the corner and 1′–0″ from the end of the angle, and extending to within 3″ of the center. A similar slot is cut in a corresponding position on the other side of the mid-point. These strips are then carefully expanded to form a bracing integral with the stud.

Studs are punched with holes 6″ on center for attachment of collateral materials and for horizontal framing used in forming openings. On the Walter Bates house, hardwood fiberboard was attached to the studs with wire ties, the ends of which were twisted outside to a 4″ projection and embedded in the mortar joints of a brick-veneer facing, leaving a 1″ air space between fiberboard and brick. Inside, metal lath was similarly attached and then plastered. On other houses metal lath and stucco were used on the exterior.

Floors were of concrete slabs cast on a corrugated steel sheet, in turn supported by standard Bates open-truss joists. The first

roofs were all steel with steel channel rafters, Holorib steel deck units, and steel shingles. In later houses Steeltex was sometimes used on the floors, and some roof decks were made with a wooden under-deck.

Comment. None.

Bibliography. 41, 44, 56.

Beamy-style

Type II. Concrete Formed in Situ

Sponsor: Housing Company

History. Like all the Bemis designs shown in this volume, this system was sponsored by a subsidiary company, Housing Company. Like all the others, it was first tried out in the laboratory and then incorporated into one or more houses.

Beamy-style is a generic name applied by the inventor to a number of systems of the same general type, in which the principal characteristic is story-height units with exterior and interior facings that carry as much pre-finish as possible. The units are also characterized by channels along their vertical edges, which cooperate to form hollow spaces. In some expositions of the idea these spaces are poured with concrete. The Beamy-style construction was first tried out with units built up of wood, one type of which is shown in the illustration. Two houses were thus built at Hampton, Virginia, in 1925–1926, followed by one in Wellesley, Massachusetts, in 1927. In more recent years the trend has been toward metal units, and these have been under constant research since 1930–1931, when a test structure was built in the laboratories of Bemis Industries, Inc. in Waverley, Massachusetts, and subjected to extensive heating and other tests.

Structure. The type shown here is one of the earlier constructions in which the floor system was not of the Beamy-style type but did involve certain improvements in ordinary floor design. The wall units of this system were built up into H-sections, being made of wood cross studs and either wood or fiberboard exterior facing. The space formed by the margins of adjacent units was poured with concrete to form a poured-in-place concrete stud. The exterior of the walls was stuccoed, the interior plastered. The floor system was made up of slabs of wood-gypsum concrete 2″ thick, reinforced with welded wire mesh, of the order of 1′–0″ wide and 4′–0″ long. In the 4′ direction they spanned from beam form to beam form. When the beam form was filled with concrete, a cast-

BEAMY-STYLE

TYPE Concrete Formed in Situ
SPONSOR Housing Company
COUNTRY United States
DATE-1925

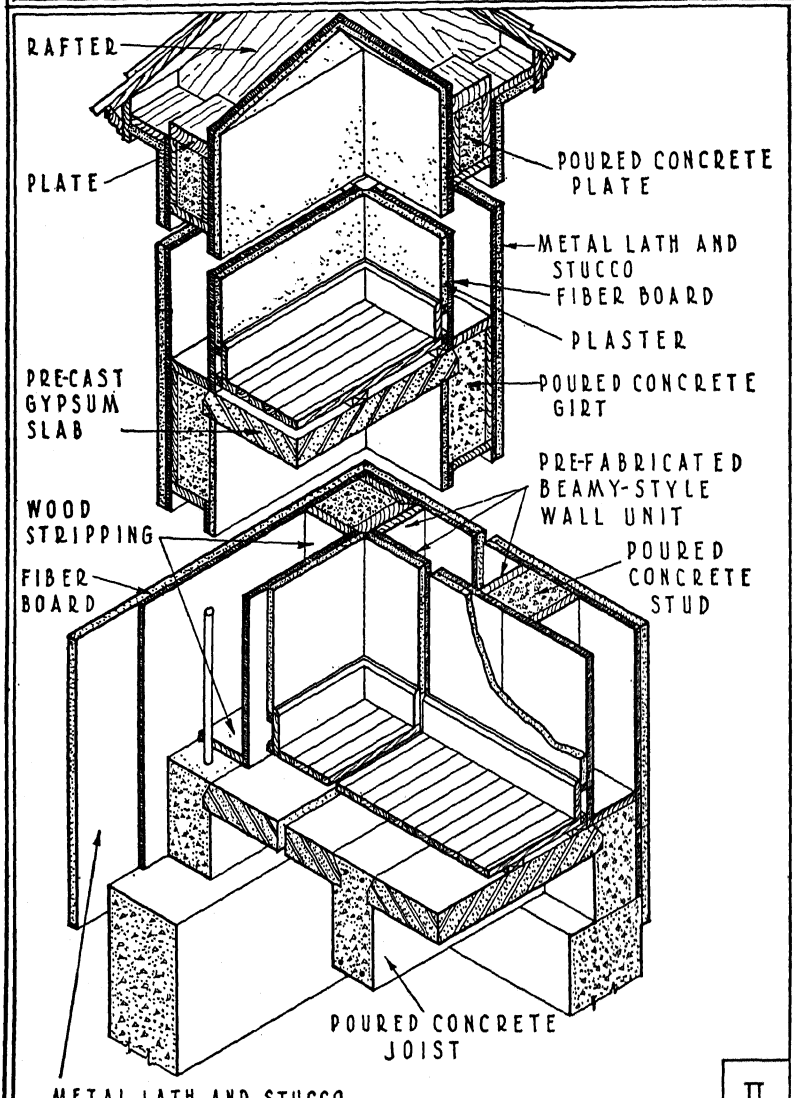

II

in-place concrete joist of the type shown in the drawing was formed which keyed firmly with the gypsum blocks and also with the cast-in-place girt formed by the upper channels of the Beamy-style units. This girt in turn extended monolithically into the poured concrete studs. The gypsum blocks would probably have taken nailing directly, but to avoid any possibility of trouble in this regard wooden screeds were affixed to them before the finish flooring was applied. The roof was made of units similar to those of the walls, and in the various examples was covered with various types of roofing, including attempts at concrete roofs.

Comment. The concrete finish roofs have not in themselves proved successful. The fireproof floors provided in this construction necessarily cost more than traditional flooring but are thought to be cheaper than those obtained by ordinary concrete methods.

Bibliography. S.

BERLOY

TYPE Metal Frame-Close-spaced; and Panel
SPONSOR Berger Manufacturing Company
COUNTRY United States
DATE-1935

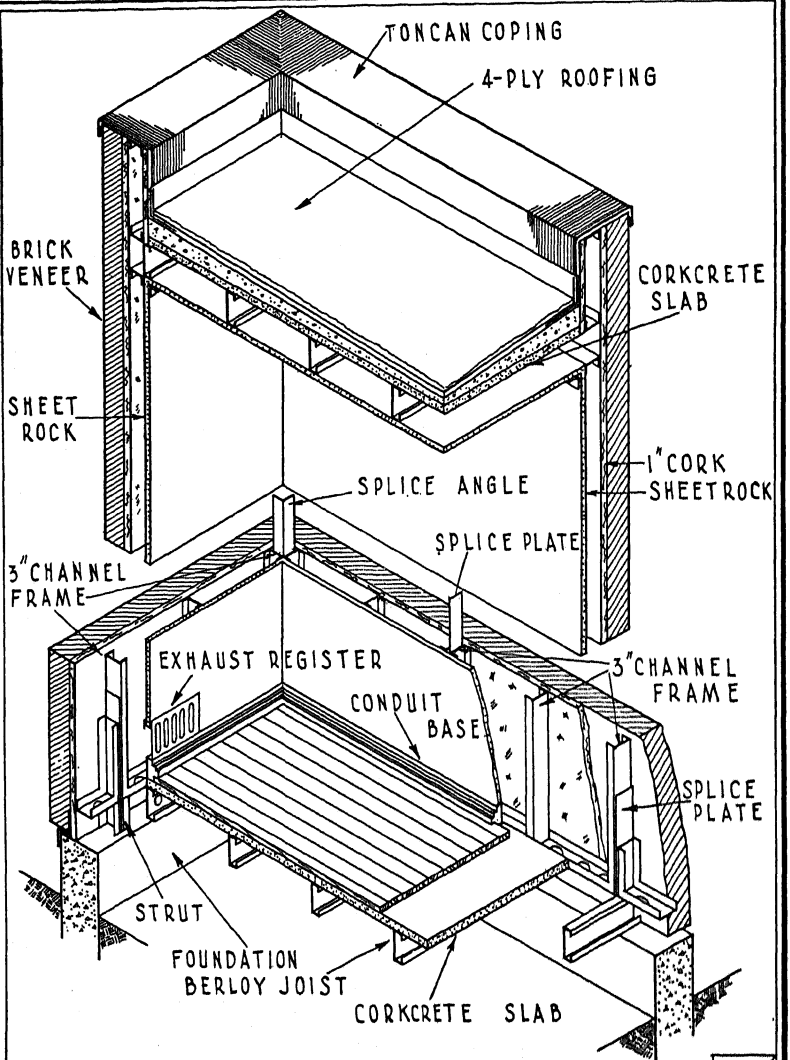

IVb/V

Berloy

Type IVb–V. Metal Frame — Close-spaced; and Panel

Sponsor: The Berger Manufacturing Company, a subsidiary of Republic Steel Corporation

History. This latest effort of the steel industry to produce economical housing with steel frames is stated by its sponsors to have occupied engineers and designers for more than a year before it was publicly released. The first public demonstration was in the summer of 1935 in Bethesda, a suburb of Washington, D. C., where a well known Washington contracting firm built two of the houses for sale, not as display models.

Structure. The basic structure is a frame composed of 16-gauge steel throughout, the studs being 3″ channels spaced essentially at 18″ on centers, while joists are of the familiar Berloy channel cross-section (with a flange return), at the same spacing and of uniform depth throughout the house, the depth determined by the maximum span.

To permit the rapid and semi-automatic erection of the wall framing, the channel studs are welded in groups of three, with top and bottom channels of like cross-section, to form a panel with a flush surface on both sides. Four types of panels are provided: blank wall, window frame, door frame, and parapet section. Joists are not formed in panels. Adjacent wall panels are interconnected by splice plates, through which they are bolted along the wall and by angles at corners; both splice plates and angles extend continuously from sill to parapet to tie the panels of various stories together.

Steps in erection are as follows: setting the foundation unit, laying the ground-floor joists, laying the splice plates and corner angles, setting the first-floor frames on the joists and bolting them to the splice plates, setting the bridging for the first-floor frames, setting the second-floor joists, etc. It will be noted that the construction is of the platform type. Wall frames parallel to the floor

framing have no direct support from that framing, as the outside joists are set in to allow the splice plates to pass by. These wall frames are supported at panel-joint locations by struts, which extend from the panel immediately below and are secured to either side of the splice plates.

With the erection of the frame, and the provision of one or two accessories discussed below, the direct interest of the sponsors apparently ends. While insisting that almost any finish materials can be applied, the sponsors make the following suggestions for finish and its application:

For floors, set pre-cast corkcrete slabs to span three joists, attaching them to the top of the joists with mastic; any type of finish may be laid in mastic on top of the slabs. For a less expensive floor, nail wood sub-floor directly to steel joists and nail on the finished floor.

For flat roofs, use corkcrete slabs; apply 1½″ of corkboard; apply a four-ply tar-and-gravel roofing with counter flashing of Toncan steel sheets at parapet. For pitched roofs, nail sub-roofing on to the rafters and apply shingles.

For walls, install corkboard over the outside of the frame; waterproof with asphalt emulsion or membrane waterproofing; anchor brick veneer to steel, stucco on wire mesh tied to steel, or nail clapboards to steel. Inside finish may be metal lath and plaster, or wallboard tied to the steel by metal clips.

The faces of the channels have holes at intervals of about 8″ for wiring and tying operations.

Comment. (See Broderick.) The panels weigh 42 pounds each. They are connected to each other by ¼″ bolts tightened by an electric screwdriver, and it is claimed that the skeleton for a two-story six-room house can be erected by five or six men in one working day. The sponsors have designed an ingenious method for fastening conduits and smaller pipes in the inter-stud space; and for air-circulation heating systems they advocate the use of the spaces within the steel frame, eliminating ducts. The outlet for such circulation is shown in the drawing.

By far the most interesting innovation in the Berloy house is the built-in, self-contained plumbing stack or chase. This chase is factory-assembled and eliminates running pipes through the walls.

It contains all hot- and cold-water pipes, and vents and flues for the heating unit and water-heater. The use of such a unit, which promises economies, limits the design of the small-house plan to the extent of fixing the relative position of kitchen and bath.

Bibliography. 66, 67, S.

BOEHLER

TYPE Panel
SPONSOR Alfred Schmidt
COUNTRY Austria
DATE-1926

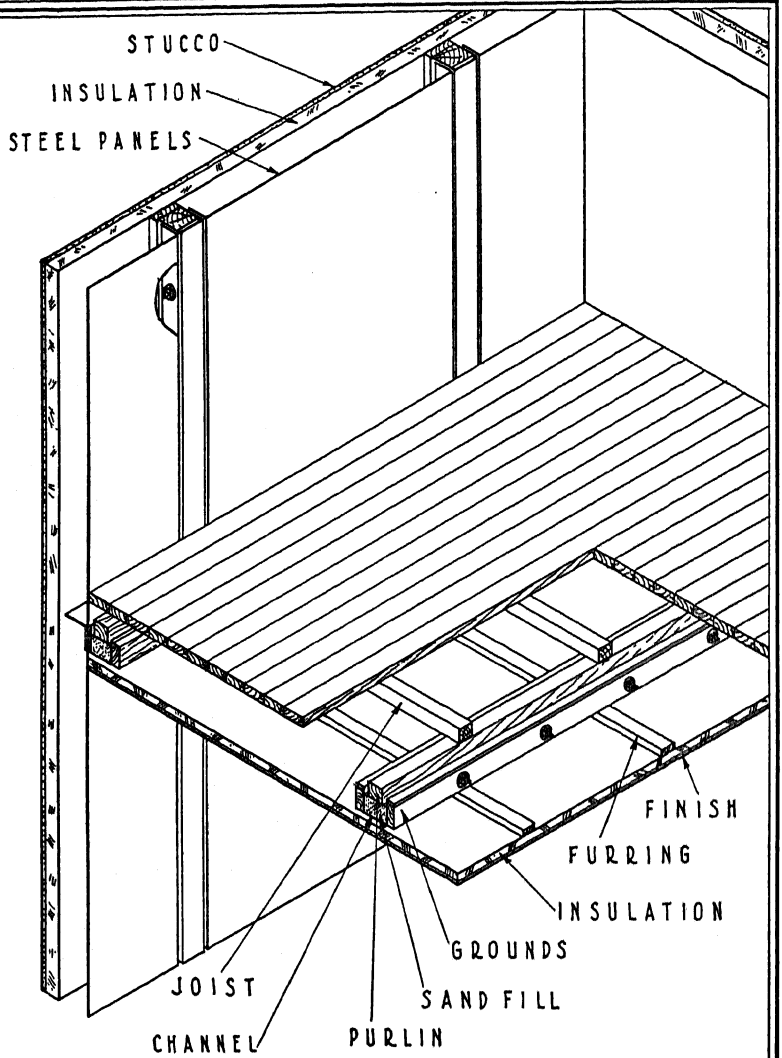

Boehler

Type V. PANEL

Sponsor: Alfred Schmidt, Architect, Vienna

History. The Boehler system is one of the oldest and best known of the European efforts toward pre-fabrication. It was designed by Alfred Schmidt, a Viennese architect, and the first houses were built in Vienna in 1926. Research followed on the insulation effects of various fillings in the hollow wall spaces, and as late as 1933 it was stated that a German *Siedlung* society was about to build 2500 houses by the Boehler system.

Structure. This system reverses the customary use of steel panels, placing them on the inside instead of on the outside (see Telford and General Houses). By so doing, it avoids the corrosion difficulties of steel and yet obtains a pre-finished interior panel that is economically competitive with conventional finishes and susceptible of considerable beauty (as in modern Pullman cars).

The steel units of the system are U-shaped, and of two general dimensions, either small channels 80 mm. wide and 80 mm. deep or large ones 920 mm. wide and 80 mm. deep. The smaller channels receive in their concave sides impregnated pieces of wood to which is attached the exterior insulation. Stucco is applied to the outside of the insulation. Panels are generally of story height but may be two stories. The alternate small and large panels are connected by bolts through their flanges and through the wooden filler of the smaller panels. (See Plate Girder.) The basic floor joist is a composite member based on a U-shaped channel of profile similar to that of the wall panel. The floor shown in the drawing is the type used frequently in Europe (above the joists), but American types might, it appears, be applied to a similar structural system. The ceiling consists of furring, insulation, and finish. An interesting feature is the sand fill in the floor channels to reduce vibration and to cushion floor noises.

Comment. In erection, the steel panels are put up first, and the insulation and stucco exterior are added. The system permits a

considerable degree of pre-fabrication, and, unlike many of those which employ steel, is based on a proper conception of how to prevent condensation on the metal.

Bibliography. 46, 48.

British Systems

Type II–III. Concrete Formed in Situ; Pre-cast Unit

Sponsors: Various

History. In subsidized housing developments in Great Britain during the post-War housing shortage, the Ministry of Health authorized the use of a great many unusual types of building construction, called collectively " alternate systems." Some of these have been described elsewhere in this Supplement. (See Atholl, Kent, Telford, and Weir.) Of all the alternate constructions authorized, those involving some type of pre-cast cementitious units were by far the most numerous. The systems illustrated here were selected from reports of the Standardisation and New Methods of Construction Committee set up by the Ministry of Health. Most, if not all, of the alternate systems were employed by the Ministry of Health and the Local Authorities primarily as a club to wield over the bricklayers, who, aware of the housing shortage and the Government program, seemed from time to time to be on the point of demanding exorbitant wages. Thus in a sense it may be said that none of these methods had an orderly or fair exploitation, which may in part account for the practical abandonment of the alternate systems after the subsidy programs were discontinued.

Channello Construction System (*The Channello Concrete Construction Company, London*) (*Drawing A*). Pre-cast channel-shaped slabs, used in pairs and set in staggered relation, provided a hollow wall. Inside slabs were made of cinder concrete with stone-concrete flanges; outside slabs, entirely of stone concrete. Flanges resting on each other formed continuous columns, but the contact of concrete through the wall was not direct. A similar unit was used on the floor; the ceiling unit was special, as shown in the drawing. It is doubtful whether, in arduous climates, condensation would be entirely eliminated merely by keeping inside flanges from touching the outside slabs. From a practical point of view, in a masonry

BRITISH SYSTEMS A

TYPE Concrete Formed in Situ; Pre-cast Unit
SPONSOR Various
COUNTRY England
DATE-1920-25

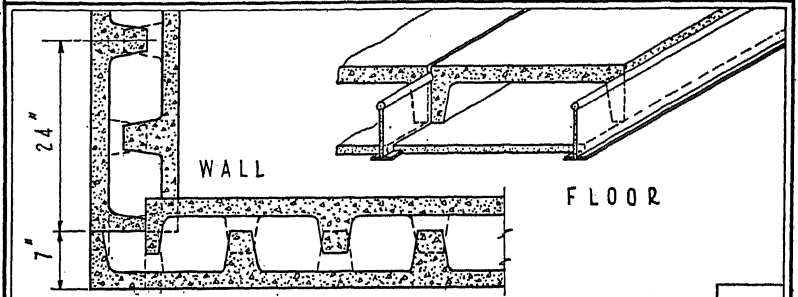

"CHANNELLO" III

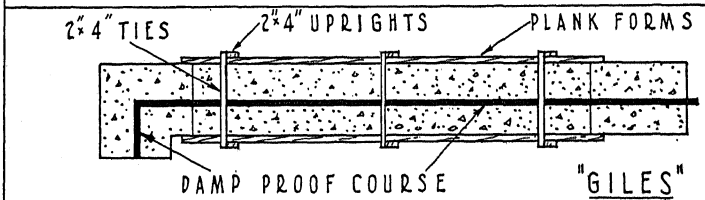

"GILES" II

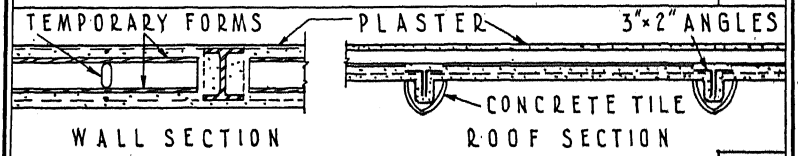

"DUPLEX SHEATH" II

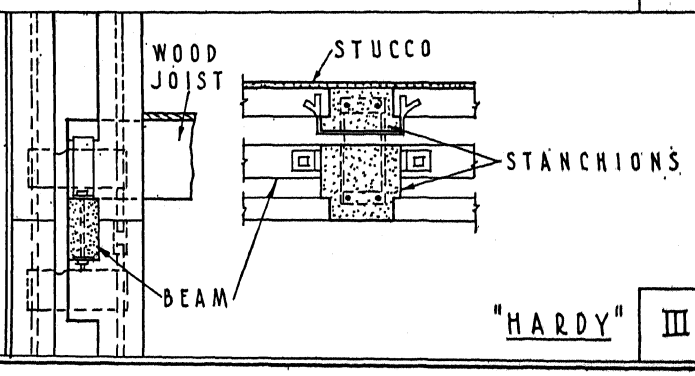

"HARDY" III

construction with the additional complication of casting, the possible economies do not seem great.

Giles System (*C. Giles, Henley-on-Thames*) (*Drawing A*). This was a system of pouring in situ, the form boards being planks bolted to uprights. By drawing a central core, a cavity was formed in the wall during pouring. This space was later filled with a poured vertical damp-proofing course. Limited to walls, the system does not seem to have developed any high degree of mechanization.

Duplex Sheath Construction (*The Duplex Sheath Construction Company, London*) (*Drawing A*). This was a steel structure with metal lathing on either side, the lath subsequently covered with cement concrete by using a cement gun. The lathing was wound around the building, openings cut out of it, and door and window frames inserted. Temporary form boards were used back of the lath and removed after the cement gun had built up enough thickness. The floor was of reinforced concrete slabs; the roof of panels, formed of pairs of angles braced by rods and battens, to which metal lath was attached, and covered with waterproofing material. No appreciable amount of job labor seems to have been saved by this method.

Hardy System (*T. Elson Hardy, London*) (*Drawing A*). Pre-cast reinforced stanchions were made in two parts, connected by galvanized iron plates embedded in projections of concrete on the inner post. Floor and roof were carried by pre-cast reinforced-concrete beams placed in the wall cavity and resting on the aforesaid projections. Filler panels for walls were made of pre-cast concrete. The floor framing was of wood joists. This system made a serious effort to eliminate condensation by providing a truly continuous air cavity even at structural points.

Loc Bloc Building Slab (*T. A. and J. L. Aldridge, Coventry*) (*Drawing B*). This system offered a double slab wall of pre-cast concrete, the bonding of one slab to the next above being accomplished by providing cups or indents on one edge and corresponding projections on the reverse edge. The distance between the bonding units was equal to the thickness of the slab, and joints were staggered. This was one of many efforts to cast a tongue-and-groove type of joint in concrete units.

Arthur F. Jefferies System (*Arthur F. Jefferies Construction Company, London*) (*Drawing B*). In this system, really massive

BRITISH SYSTEMS B

TYPE Pre-cast Unit
SPONSOR Various
COUNTRY England
DATE-1920-25

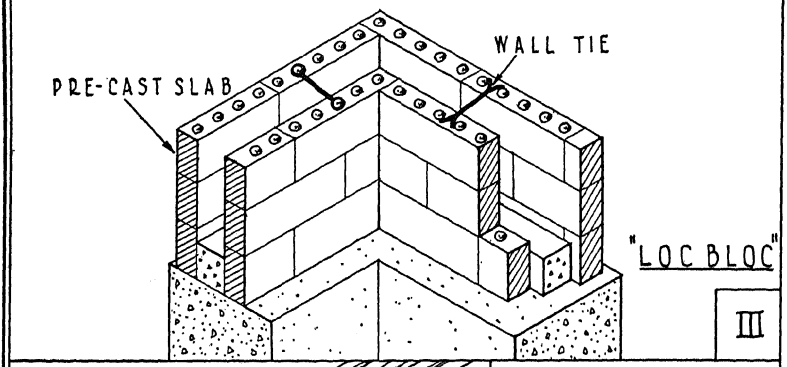

"LOC BLOC"

III

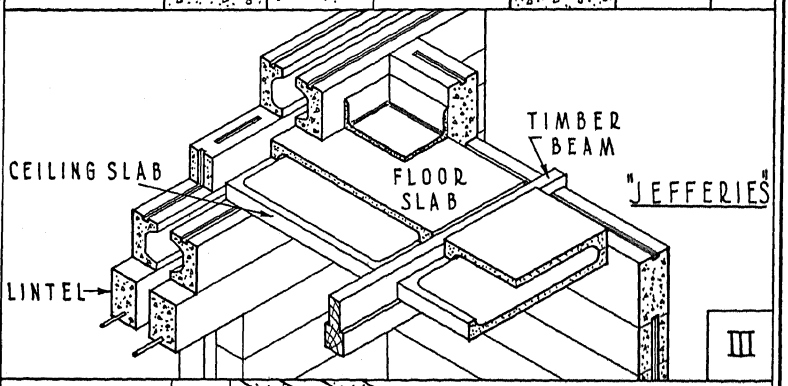

"JEFFERIES"

III

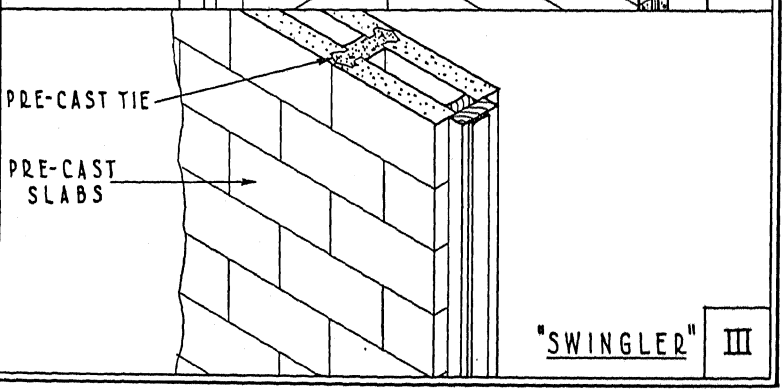

"SWINGLER"

III

pre-cast cementitious units provided a double wall. The outer blocks were of stone concrete 3″ thick, the inner of cinder concrete 4″ thick; and a cavity was formed between. Concrete floor slabs were received on specially molded wood joists, finished above with a wood floor and below with plaster. The weight and amount of material, together with the essentially masonry-like character of the construction, do not promise economy.

Swingler's Hollow Concrete Wall System (*E. Swingler, London*) (*Drawing B*). Pairs of pre-cast slabs were held together by pre-cast ties. The slabs, with joints staggered, were bedded in mortar, using a flat-spouted vessel. The key ties were placed without mortar, but the vertical joint of tie and block was filled solidly with grout after the next course had been laid. The outer side of the key tie was coated with damp-proofing. Floors were supported on interior slabs of extra thickness projecting on the inside to form a cornice. In addition to the difficulty of casting such a complicated section of slab or tie, the presence of through-concrete at every vertical joint would appear to induce condensation.

Bonding Block (*The Bonding Block Constructional Company, Ltd., London*) (*Drawing C*). This was another paired-slab system, with the outer slabs of stone concrete and the inner of cinder concrete. The return ends of outer slabs, where they bonded into the internal thickness of the wall, were also of cinder concrete.

Lowestoft System (*S. W. Mobbs, Borough Surveyor, Lowestoft*) (*Drawing C*). Pairs of L-shaped blocks set in mortar were placed as shown in the drawing. As usual, the outer slabs were of stone concrete, the inner of cinder concrete. The L's butted at the bottom edge, providing a U-shaped cavity which was filled with low-cement-content concrete before setting the next course. This system, essentially a poured concrete wall with pre-formed masonry-like faces, does not seem to offer economy.

Duo-Slab System (*William Airey and Son, Ltd., London*) (*Drawing C*). Pre-cast slabs were held apart by wood slips while temporary wood forming was applied at their joints and studs and corner posts poured in situ; a fair combination of monolithic structural members and pre-cast fillers, which nevertheless might be subject to condensation.

Trussit (*The Self Sentering Expanded Metal Works, Ltd., London*) (*Drawing C*). Wood studs were placed at about 4′–0″

BRITISH SYSTEMS C

TYPE Concrete Formed in Situ; Pre-cast Unit
SPONSOR Various
COUNTRY England
DATE-1920-25

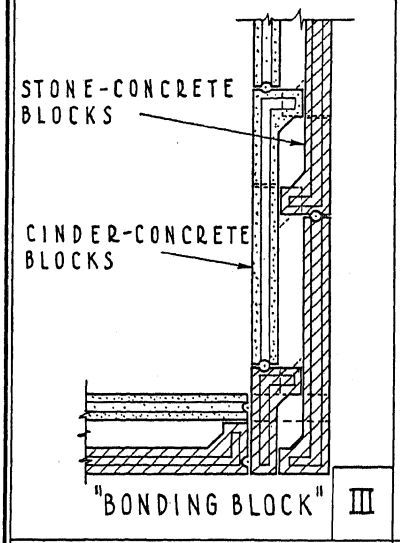

"BONDING BLOCK" III

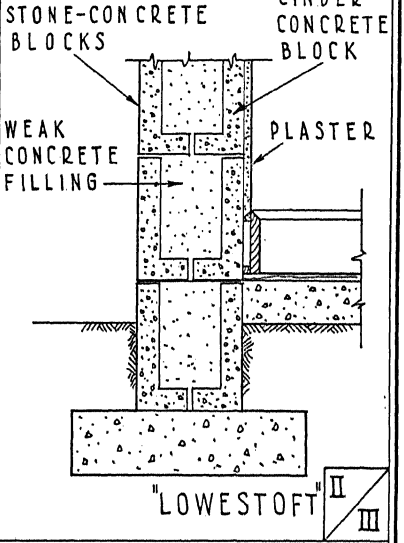

"LOWESTOFT" II/III

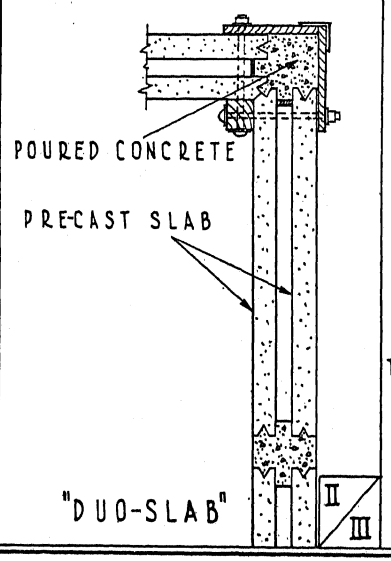

"DUO-SLAB" II/III

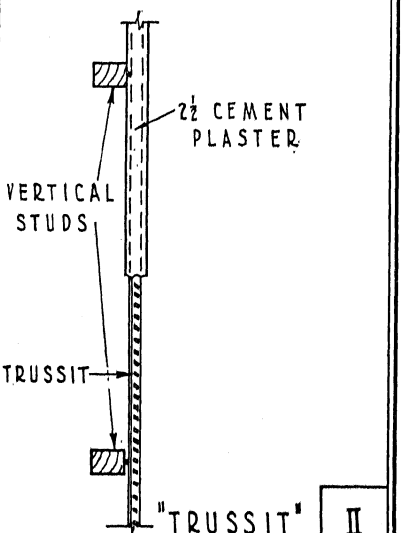

"TRUSSIT" II

BRITISH SYSTEMS D

TYPE Concrete Formed in Situ; Pre-cast Unit
SPONSOR Various
COUNTRY England
DATE-1920-25

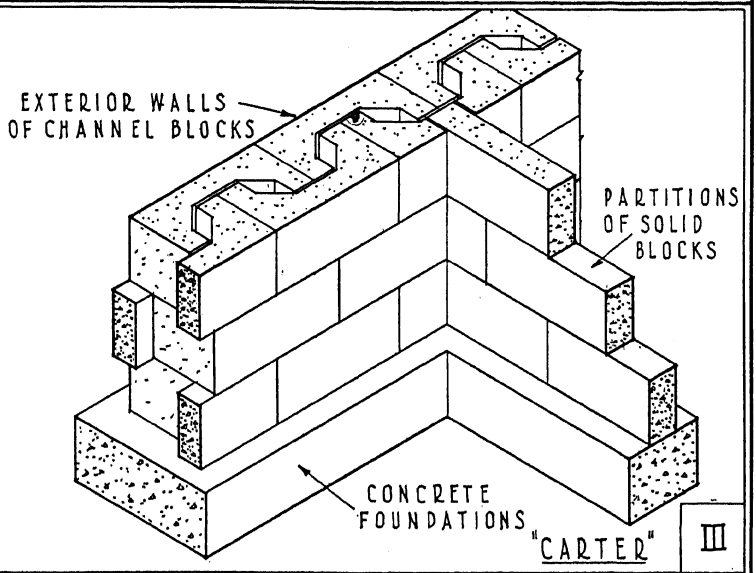

"CARTER" III

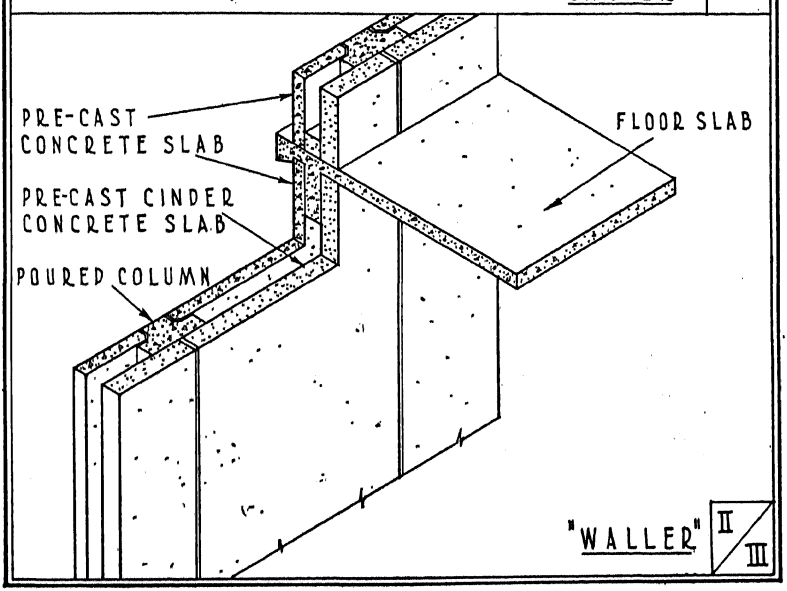

"WALLER" II/III

centerings and to their outer faces was applied "Trussit," a patented corrugated expanded metal. This expanded metal was then plastered with concrete on both sides to form a concrete wall with a total thickness of 2″ to 3″. The interior was finished with fiberboards, building boards, or cinder-concrete slabs applied to the wooden studding.

Carter System (*The Mount Granitic Stone Company, Nottingham*) (*Drawing* D). This method was characterized by pre-cast blocks of channel section, with the flanges and the channels interlocking in the wall to form a continuous bond and cavity wall, the joints of which were broken at each course. Interior walls employed solid blocks. The condensation problem does not appear to have been solved.

Waller System (*The Waller Housing Corporation, London*) (*Drawing D*). Paired pre-cast slabs of story height were joined at intervals by concrete columns poured in situ. The outer slabs were of stone concrete, the inner of cinder concrete. A girt was poured in situ between the slabs at floor levels to support a poured slab-and-joist floor. Pre-cast roof slabs were made in large sections to be lifted directly into place. Condensation problems do not appear to have been eliminated.

Triangular Block Construction (*The Triangular Concrete Construction Company, Thames Ditton*) (*Drawing E*). Standard blocks for this system were triangular in horizontal cross-section, 18″ long at the base and 9″ to the apex; with other blocks in unit fractions of these dimensions, made by subdivision of the full-size blocks. Blocks for the outer face of the wall were of stone concrete; for the inner, of cinder concrete. The floor was conventional. The system provided a wall which had the conductivity characteristics of a solid concrete wall, but in which the path of heat travel was nearly one and a half times the wall thickness. In a wall 9″ thick this makes an effective insulation thickness of 13 ½″ and might be enough to suppress condensation. Casting could not have been easy or inexpensive and there does not seem to have been much progress in pre-fabrication or in rapid erection.

Bibliography. 59.

BRITISH SYSTEMS E

TYPE Pre-cast Unit
SPONSOR The Triangular Concrete Construction Co.
COUNTRY England DATE-1920-25

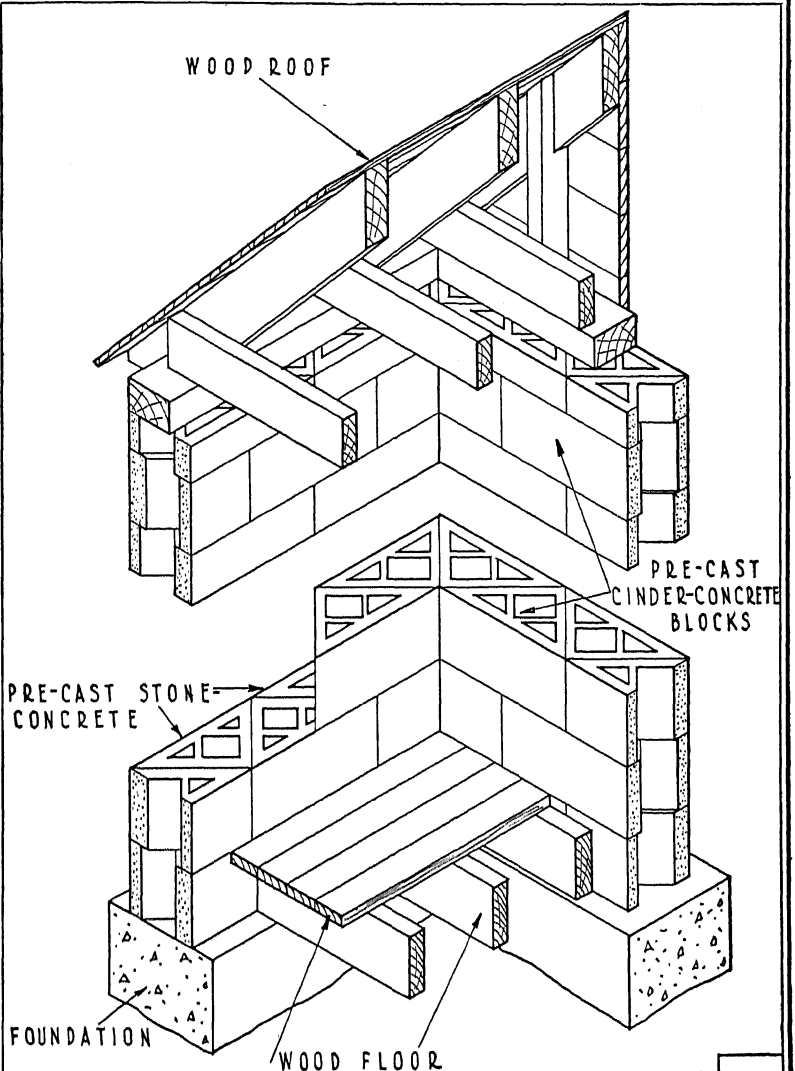

"TRIANGULAR" III

BRODERICK

TYPE Metal Frame - Close - spaced
SPONSOR. Broderick Firesafe Homes Assoc. (See Text)
COUNTRY United States DATE - 1925

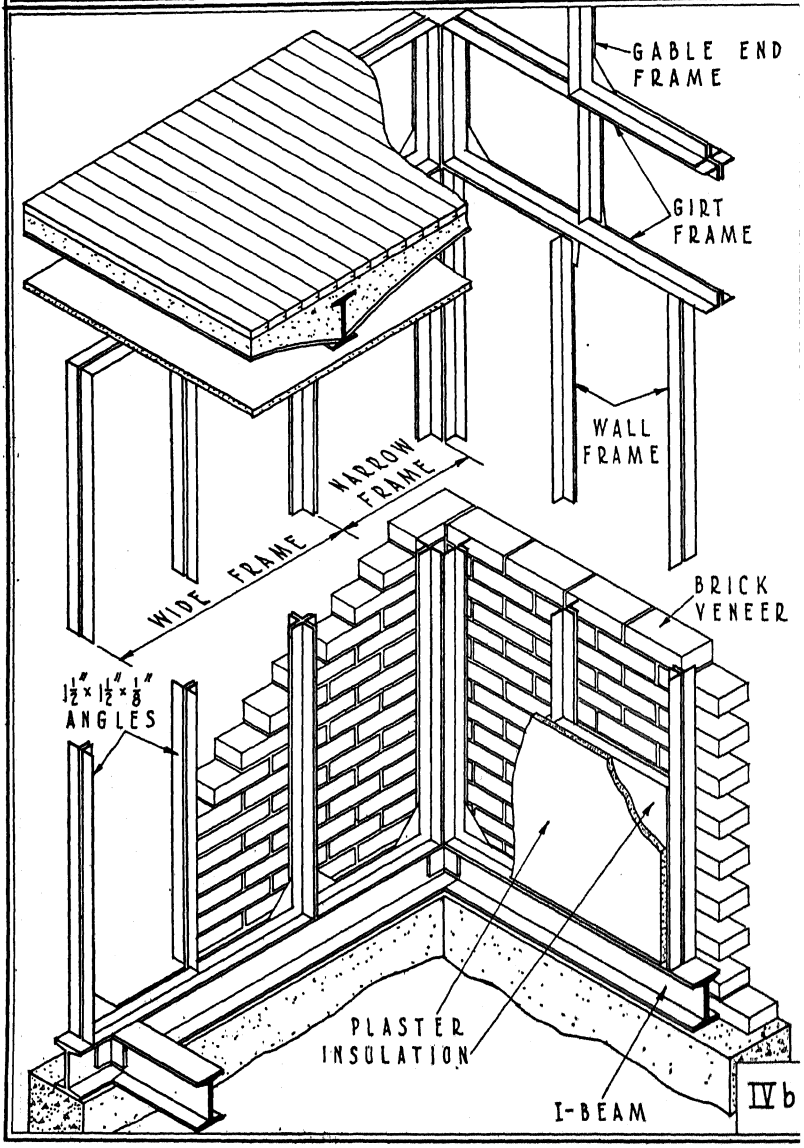

IV b

Broderick

Type IVb. Metal Frame — Close-spaced

Sponsor: Broderick Firesafe Homes Association, succeeded by Steel Frame House Company, a subsidiary of McClintic-Marshall Corporation

History. John Carroll Broderick developed this system of steel framing, and with it in 1925–1926 built a model house at Tarrytown, New York. This house was followed by an experimental house built in the Leetsdale, Pennsylvania, plant of McClintic-Marshall in late 1926 and early 1927. Shortly thereafter the Broderick system was acquired by the McClintic-Marshall Corporation to be marketed by their subsidiary, the Steel Frame House Company, formed for the purpose. About 15 to 20 houses were built before the latter company was discontinued.

Structure. The chief thing that differentiates the Broderick system from other steel frames is its effort to eliminate the high cost of assembly by providing pre-made panels of convenient size. When these are assembled on the site, the frame becomes strictly a steel frame and must have attached to it the necessary collateral materials.

The system starts, therefore, with a basic wall panel in two or three heights, made of a rectangular frame of paired angles, 1 ½″ x 1½″ x ⅛″, connected at the corners by riveting through gussets. A typical panel is 1′–6″ wide. A wider panel, 2′–8″, is also provided, but in this case (see left side of drawing) an intermediate pair of vertical angles is provided on the center line. Thus the studs when assembled are always close to the conventional 16″ centering of wooden studs. Necessary door and window panels of similar formation are also provided.

The punchings in the frames for bolts are arranged to register, sides and ends are interchangeable, and the panels are sufficiently exact to be reversible. Thus, with square and straight frames, it is supposed to be impossible to erect the house except in the correct manner.

Units similar to the wall panels are used horizontally as girts at the second- and attic-floor levels.

The floors are framed with light I-beams, girders, and columns, while the partitions are of panel construction. Light pre-fabricated trusses of triangular units, field-bolted, or steel rafters are used for roof framing.

Floor construction may be of reinforced-concrete arches over metal forms, gypsum slabs, or combinations of hollow tile and concrete joists. Finished floors are carried on embedded sleepers of wood. Wall and roof finishes are variable, but it should be pointed out that the holes in the studs form ready attachments for the use of metal lath and stucco or plaster.

Comment. The attachment of collateral materials did not prove so simple as the design of the frame and the Broderick Firesafe Homes Association was an effort towards cooperation of various manufacturers who would supply these secondary elements.

Bibliography. 43, 44, 56, S.

Buell

Type VI. UNITARY

Sponsor: T. H. Buell and Company, Architects, Denver, Colorado

History. The Buell system first came to the writer's attention in January, 1934, when it was published in *The Architectural Record.* At that time its sponsor stated that production had not yet started, although small-scale models had been prepared.

Structure. The proposal is fundamentally for a unit type of building that cannot readily be shown in the drawings. These drawings are therefore confined to structural details. Each unit of the building is to be about 10′–0″ x 19′–0″, and to be transported to the site on a trailer after assembly in the factory. The basic house consists of three such units: one for kitchen, bath, dining alcove, and two beds; a second for garage; and a third for living room. Additional units can be added to accommodate a family of more than parents and one child.

As will be noted, the structure of the individual rooms is of the panel and skyscraper type. From a sill angle, floor joists start, suitable for carrying a steel-ribbed plate floor; the wall panels are built up outside the sill angle. The walls consist of a panel of 1″ insulation (crushed non-corrosive metal filler) faced with metal on both sides. Panels are jointed by metal ribs, a V-shape on the outside and a flat plate inside. Bolts are insulated by asbestos washers, so there is technically no through-metal except the bolt. The outside angle ribs are 1.414″ on a side and made of 12-gauge metal. They are spaced at 3′ intervals. The roof construction is said to be similar to that of an automobile top.

The sponsors claim that the house is earthquake-proof, highly fire-resistant, well insulated, immune from insect attack, light in weight (3 pounds per cubic foot), and entirely shop-fabricated, requiring only 24 man-hours for field erection.

The units are to be taken to the site on trailers or trucks provided with cranes; furniture and dishes are to be supplied and " as

BUELL

TYPE Unitary
SPONSOR T. H. Buell and Company
COUNTRY United States
DATE-1930-35

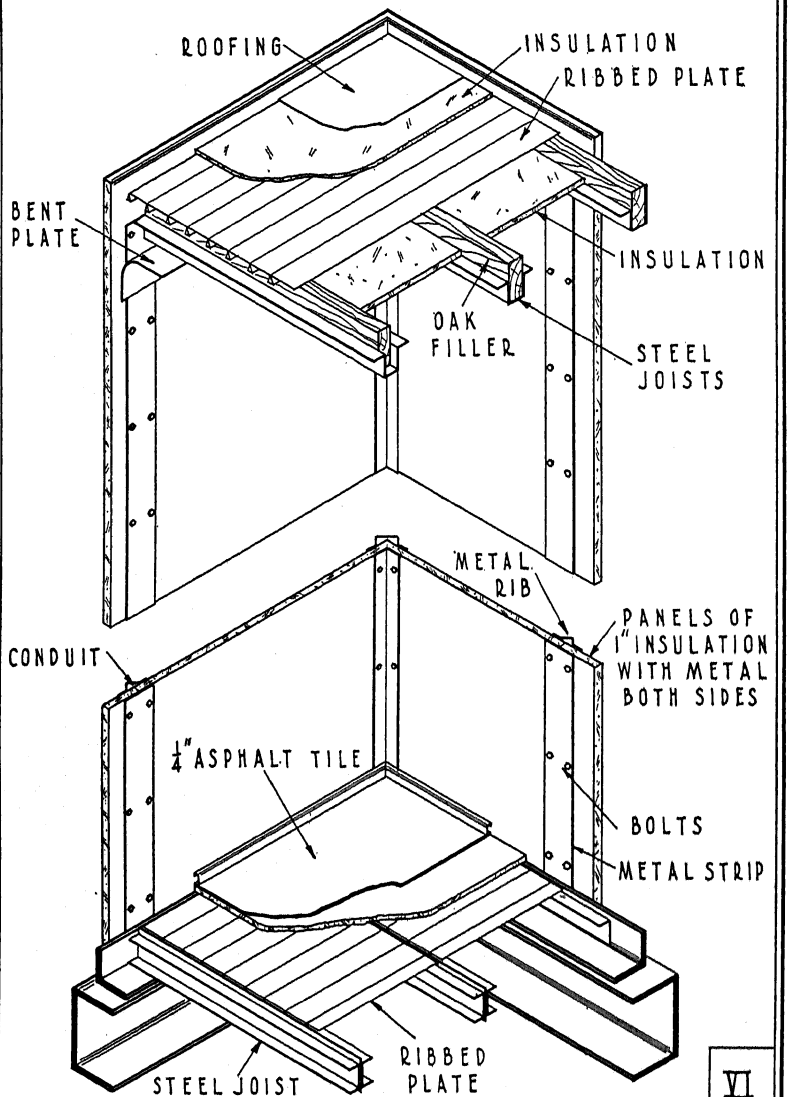

VI

soon as furniture and dishes are unwrapped and fuel put in motor, the house can be occupied."

Comment. This house is clearly derived from the motor industry. Its sponsors admittedly plan for a short-lived building (5 to 10 years) with outworn or obsolete parts replaceable and with definable salvage value. Low cost is predicted and the price of $1200 delivered is set, subject to the proviso " when manufacture and distribution shall have approximated one-half the efficiency in production evidenced in the automotive field."

The construction does not attempt to provide for houses of more than one story, assumes that the building will be cellarless, is developed for flat roofs only, and does not provide such accessories as a fireplace. The approach is a new one and rather revolutionary.

Bibliography. 28.

BYRNE

TYPE Pre-cast Unit
SPONSOR Barry Byrne
COUNTRY United States

DATE-1930-35

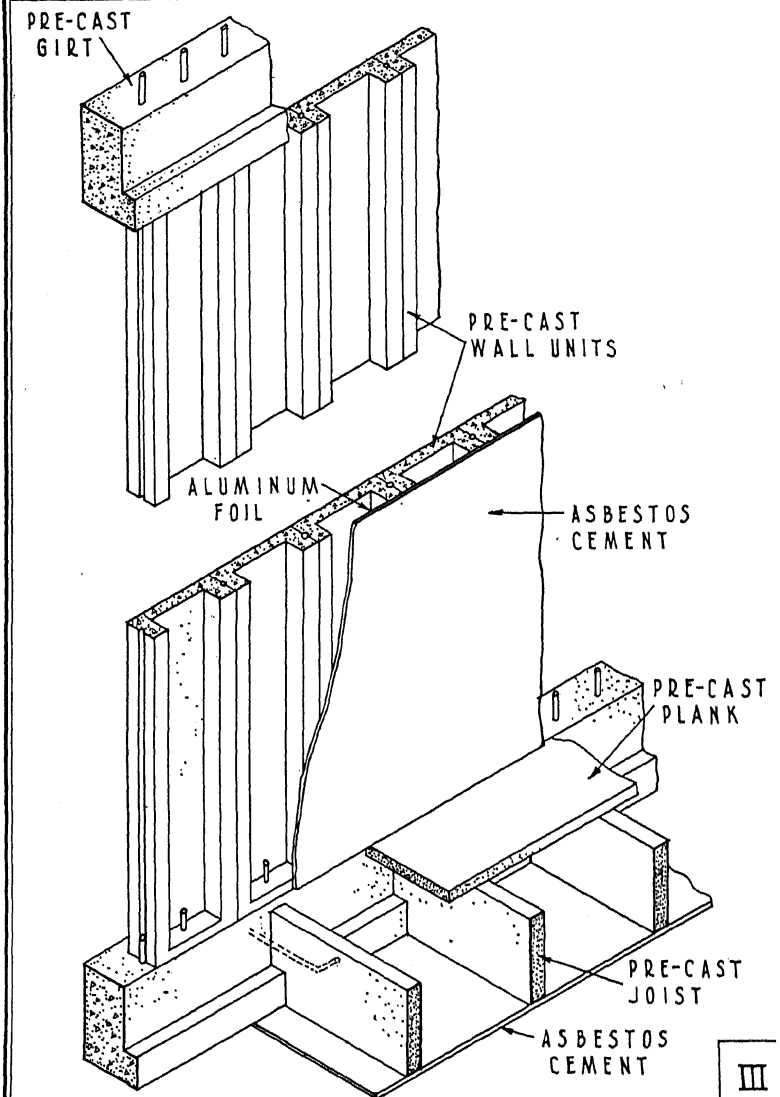

III

Byrne

Type III. Pre-cast Unit

Sponsor: Barry Byrne, Architect

History. This system was described in *The Architectural Record* for January, 1934.

Structure. Shop-fabricated pre-cast concrete wall units of channel shape and story height are erected on a poured foundation wall. These units start from and end at L-shaped girts, to which they are doweled through the cross pieces at the ends of the panels. Additional bars run vertically through the small holes provided by juxtaposing two units. This hole might also be used for grout or for pouring of a mastic waterproofing. Pre-cast reinforced concrete joists rest on the ledges of the L-shaped girts which are let into the ends of the joists and also doweled to them. Pre-cast planks span the joists. Above these is a floor of cork. The flat roof is of the prepared type laid over cork insulation. Walls are finished on the inside with a film of aluminum foil and a sheet of asbestos-cement. This is in turn covered with wall fabrics. Individual wall units are 4″ thick, 12″ wide, story height, the slab of the wall unit 1½″ thick, and the legs of the channel 2″ thick.

Comment. This building consists almost entirely of pre-cast materials, and hence is a dry house. For the simple detail shown, and the flat roof of the house illustrated, it involves remarkably few sections, although these undoubtedly will have to be of varying widths and lengths. The unit proposed is small enough to be flexible in design and light in weight. It should be possible to produce interesting organic architectural expressions. Conventional exteriors would be harder to achieve. Interiors offer no difficulty.

With sufficient accuracy in manufacture of concrete (difficult to attain) the house should be easy to erect. Units are not so much heavy as bulky, and might be transported for some distance. The house is clearly strong enough and fireproof. There are few enough shapes to permit considerable mass production.

Bibliography. 28.

COLORADO FUEL

TYPE Metal Frame-Skyscraper
SPONSOR McKay Fireproof Company
COUNTRY United States
DATE-1925-30

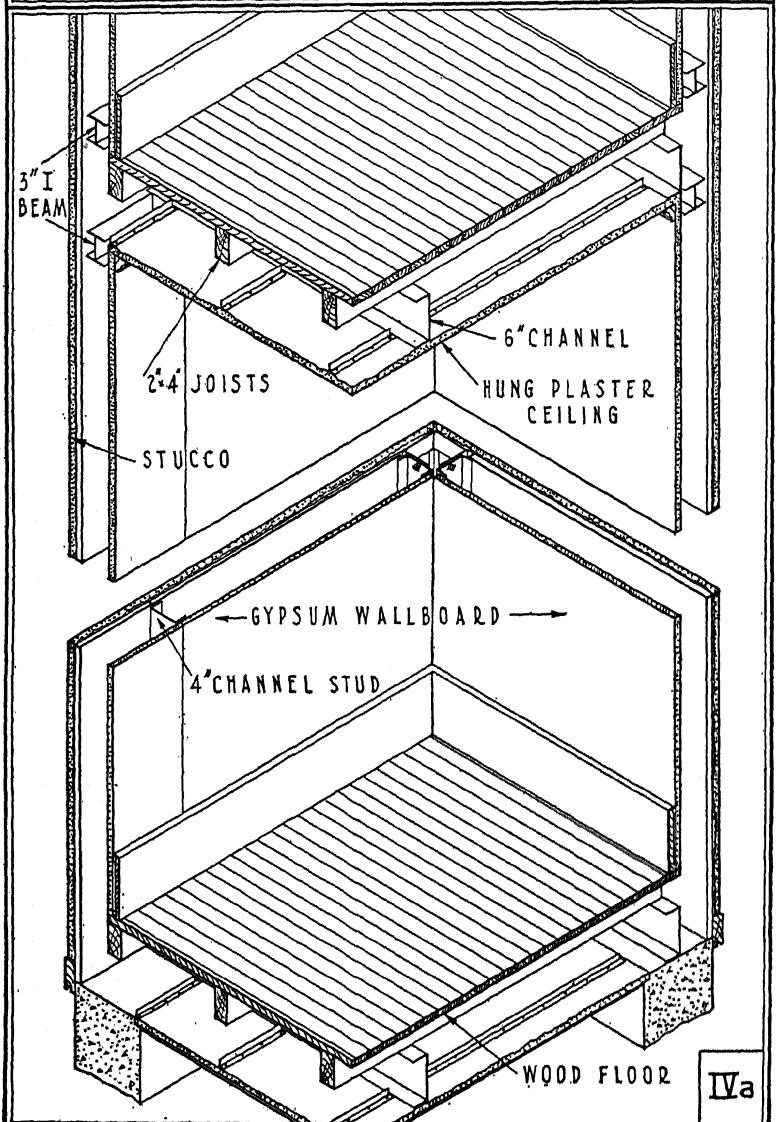

IVa

Colorado Fuel

Type IVa. Metal Frame — Skyscraper

Sponsor: McKay Fireproof Company

History. In 1930 the Colorado Fuel and Iron Company was using a house of the type shown here, sponsored by the McKay Fireproof Company which has subsequently built other types of steel houses (1933) in its own Cleveland area. The McKay Fireproof Company has been at work in this field since 1926 at least. (See McKay.)

Structure. The house has a bona fide steel frame of the skyscraper type. Four-inch channel studs at 4′–0″ centerings are framed to 3″ I-beam girts, these in turn supporting 6″ channel joists at the same centerings as the studs. The wall consists of ¾″ gypsum wallboard attached to both sides of the studs and stuccoed or brick-veneered on the exterior. The flooring is of wood carried on 2″ x 4″ wood joists which span the steel joists. The ceiling is of hung plaster. The roof is also framed in steel with wood boarding and shingles.

Comment. None.

Bibliography. 41, 44, 56.

CONCRETE GRID FORM

TYPE Concrete Formed in Situ and Pre-cast Unit
SPONSOR Lloyd Wright
COUNTRY United States
DATE - 1930

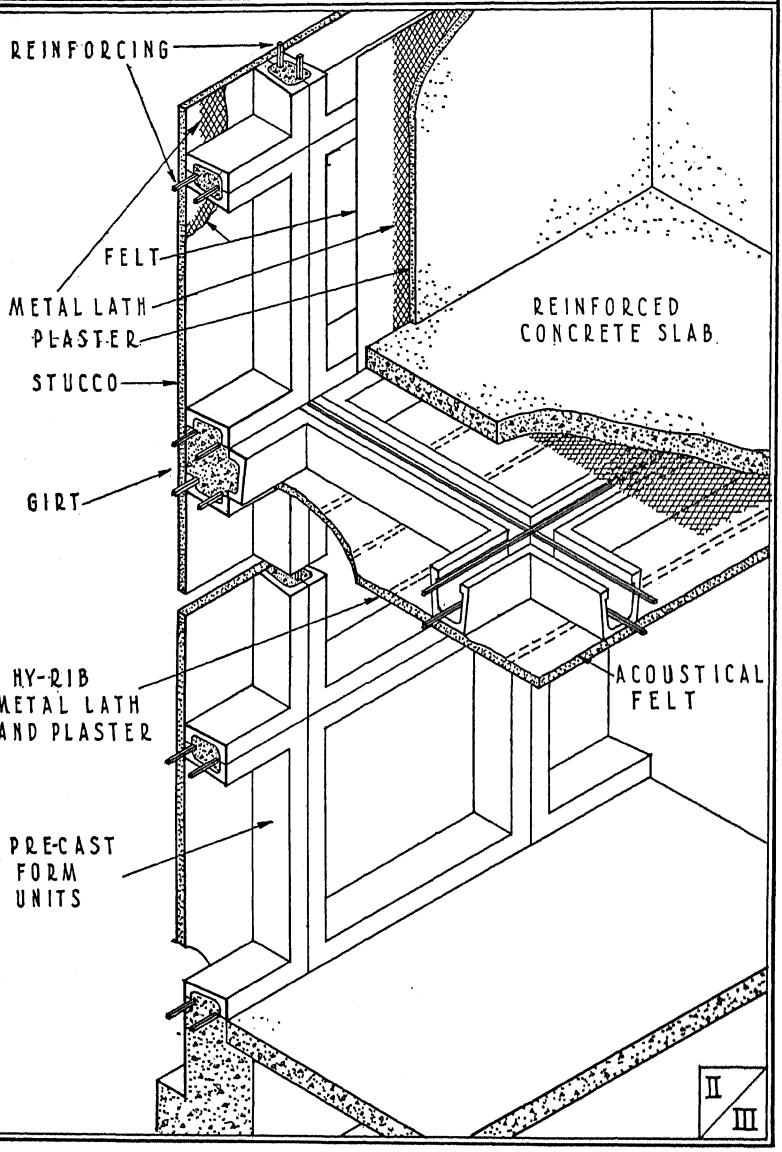

Concrete Grid Form

Type II–III. Concrete Formed in Situ; and Pre-cast Unit

Sponsor: Lloyd Wright

History. In this construction, first broached in a house built for Louis Samuel, Los Angeles, California, in 1930, Lloyd Wright follows in the footsteps of his father, Frank Lloyd Wright. Both were dissatisfied with the available methods for building houses and turned their attention towards concrete, making their designs an organic expression of the structural systems invented by them. Neither father nor son, both of whom clearly regard themselves as architects and not industrialists, has made any very serious effort to push his conceptions into production, although neither has been content with solutions on paper. Thus, like the several concrete systems of Frank Lloyd Wright, this one by Lloyd Wright has not had widespread use. It is none the less fertile in suggestion for that.

Structure. The structure is one of concrete poured in situ, with the use, however, of pre-cast concrete units for forms. Little wood is used in the forming and none in the finished building. Pre-cast grid sections, split as shown in the drawings, form receptacles for reinforcing and for the concrete for studs, joists, floor, and flat roof. Stucco on wire mesh over felt forms the exterior; plaster on metal lath, the interior.

Where the concrete is not deemed sufficiently moisture-resistant or where metal is exposed, copper flashing is used and fully exposed, being applied in a rhythmic pattern about the building and also used on doors, windows, fireplace, hood, and heaters. No paint is used. The colors are all inherent in the materials — plaster and stucco colored by their aggregates, copper colored green by chemical change, and glass. The flashing referred to is stamped into a pattern.

Comment. The building is said to be the lightest, by one-half, of all reinforced-concrete buildings ever designed and built for the purpose.

Bibliography. 23.

CONCRETE HOUSE

TYPE Pre-cast Unit
SPONSOR Portland Cement Association
COUNTRY United States
DATE - 1934

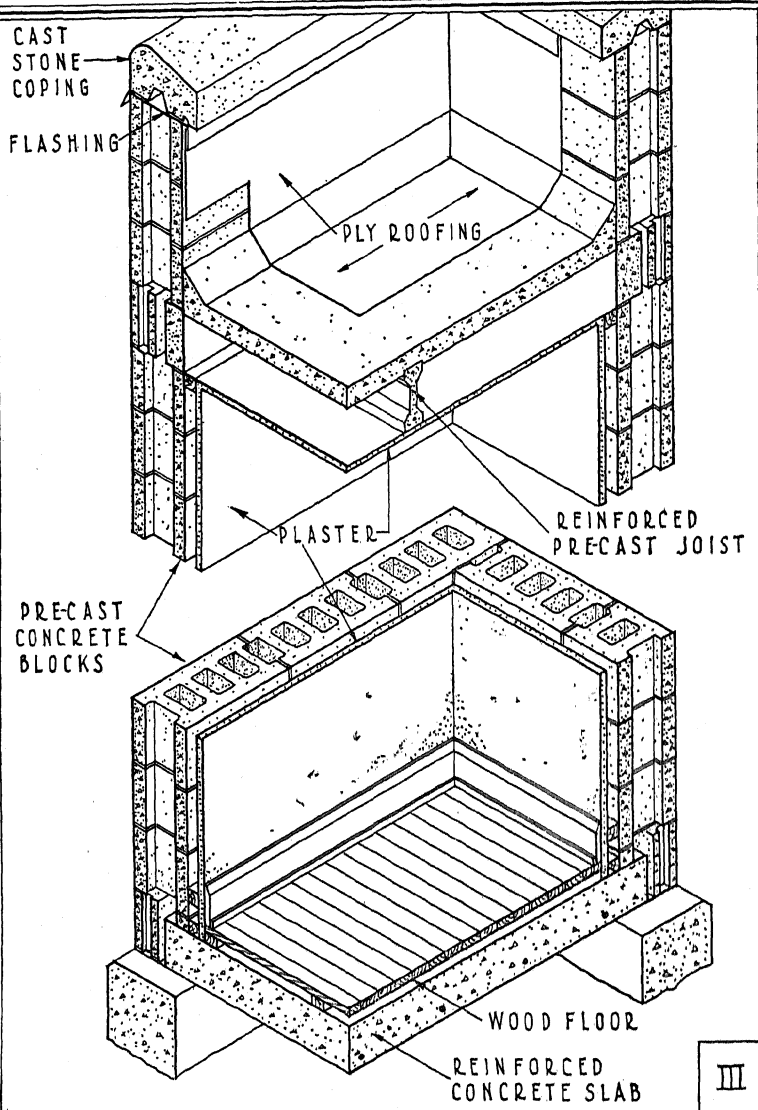

III

Concrete House

Type III. Pre-cast Unit

Sponsor: Portland Cement Association

History. A modern type of small house was built at the Chicago Century of Progress exposition in 1934, to advertise and popularize the extensive use of cement products in house construction. The fireproof qualities and economy were stressed as advantages. The house was designed by Wyatt B. Brummitt and Wal-Ward Harding.

Structure. The walls were of standard 8″ concrete masonry units covered with cement paint on the outside for finish. The lower floor was poured concrete slab, reinforced. Other floors were thinner concrete slabs resting on 8″ pre-cast concrete joists. The roof was flat, covered with 2-ply roofing, with 1″ of cork insulation under the roofing in some sections.

The finish wood floors were nailed to light wood sleepers, resting on the concrete slabs. Interior wall and ceiling finish was lath and plaster, with an air space between the masonry walls and the plaster provided by wood grounds.

Comment. Clearly this is an attempt to popularize a particular material, rather than any complete system for mass-produced houses.

Bibliography. 51.

CON-TEE

TYPE Concrete Formed in Situ
SPONSOR Con-Tee Company
COUNTRY United States
DATE-Unknown

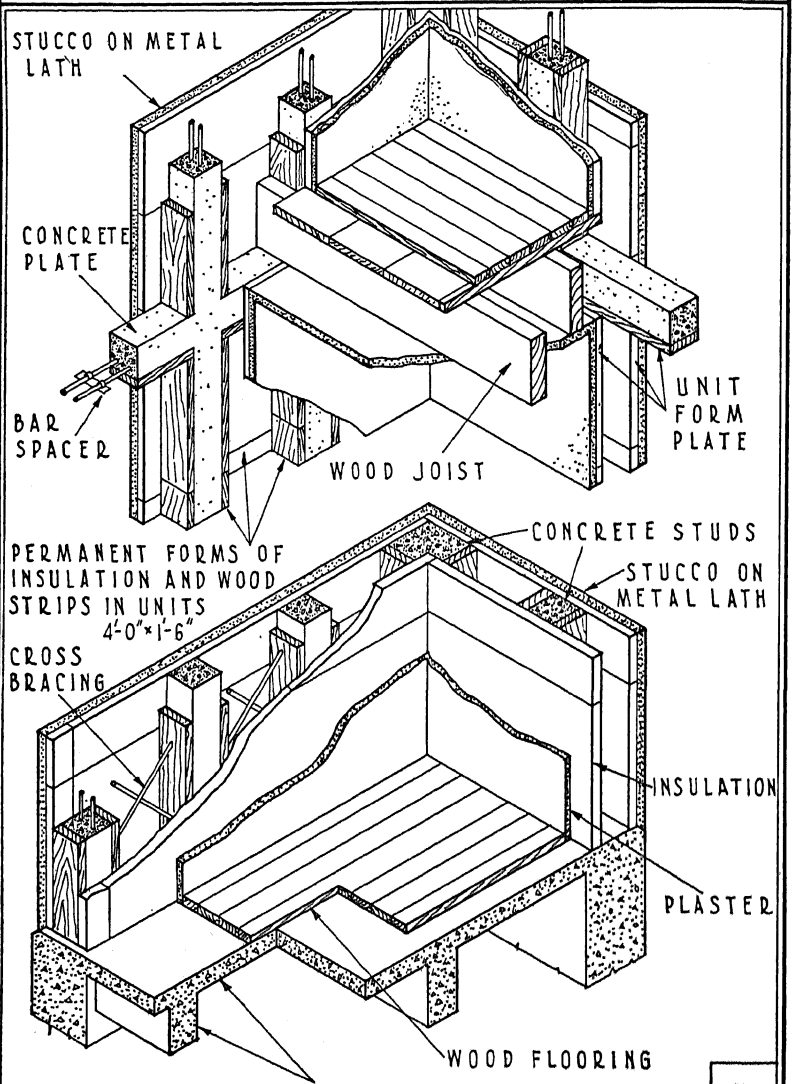

II

Con-Tee

Type II. Concrete Formed in Situ

Sponsor: Con-Tee Company

History. This company has been working for several years on the basic idea of assembling insulating wall materials in such a manner that they serve for the pouring of reinforced-concrete wall-framing members. The system illustrated has been used for a few residences and a church in Kansas City, a hotel in Chillicothe, Missouri, and a church in Overland Park, Kansas. The company's other systems have been used less extensively.

Structure. This system relates to walls and partitions only. It is classed as " concrete formed in situ " because the structural strength of the walls is provided by poured reinforced-concrete studs and spandrel beams. The wall surfaces and the forms for the poured concrete are provided by pre-fabricated units, consisting of two slabs of insulation board, 4′–0″ long by 1′–6″ high, spaced 4″ apart by six vertical wood boards, 4″ x 1″. Four of these boards are arranged in pairs to provide two 4″ x 4″ spaces for pouring the studs, 16″ on center. The remaining two boards are placed 2″ from either end of the unit, so that when the units are erected in the wall, space for a 4″ x 4″ stud is formed at each vertical joint. Units for courses at floor level also have horizontal boards to provide forms for the spandrel beams. Studs and beams are reinforced by pairs of rods secured in place by special metal bar spacers that serve to align the units. Units are tied together and the structure stiffened by diagonal cross-bracing.

On the exterior, metal lath and stucco are applied to the insulation board; on the interior, plaster direct. The sponsor claims that brick or stone veneer can also be applied to the exterior.

Comment. This is an ingenious attempt to solve the difficulties of forms for pouring and of heat insulation in a reinforced-concrete construction. There are no forms to be salvaged after erection and no molding or erecting equipment to be returned.

Bibliography. 50.

CORKANSTELE

TYPE Metal Frame-Close-spaced
SPONSOR Corkanstele, Incorporated
COUNTRY United States
DATE - 1926

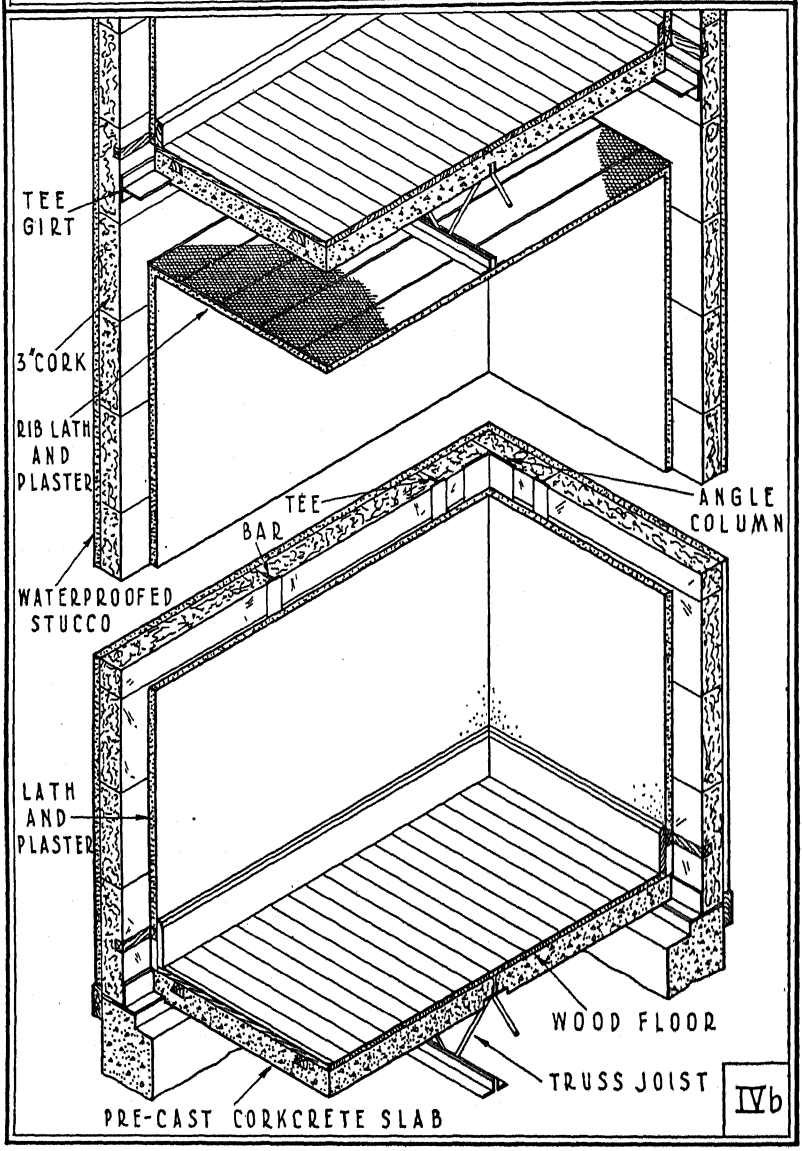

IVb

Corkanstele

Type IVb. METAL FRAME — CLOSE-SPACED

Sponsor: Corkanstele, Inc. (Division of Cork Insulation Company, Inc.)

History. This rather thoroughly clothed steel frame and insulation system, the invention of Junius H. Stone, was first used for residential construction about 1926 for the erection of a parish house and residence on Long Island, and for a few other dwellings, notably one at Scarsdale, New York. The system for dwellings differs somewhat from that used in industrial and commercial work, where it has been successfully employed for more than twenty years, chiefly for refrigeration purposes. The system originally developed for dwelling-houses was based upon the wide spacing of structural supports. The basic features have been retained in the sponsor's latest developments. At the end of 1934 the corporation was actively seeking business.

Structure. In the latest design the frame consists of vertical steel Tees spaced 2′–0″ on center, securely anchored to a concrete foundation. At the floor levels horizontal steel Tees act on struts as bearings for the open-truss joist system. The vertical Tees are supported laterally by horizontal Tees at mid-height. Trussed joists form the floor frame and to them are attached rib lath and plaster ceiling. A pre-cast composite cork and concrete slab with integral nailing strips, to which are attached the finished flooring, forms the floor system.

The inside wall surface is formed of metal lath and plaster attached to wood grounds inserted behind 3″ cork wall slabs. The outside wall surface may be stuccoed directly on the cork or finished with clapboards or brick veneer. The stucco finish is shown in the drawings.

In the earlier Scarsdale house the system was slightly different. I-beams were used instead of Tees, turned so that their flanges were perpendicular to the plane of the wall. Between these flanges were 4″ hollow cork-concrete blocks. Over the face of blocks and

I-beams on the inside was a layer of 1″ corkboard which served as insulation and as plaster base. Waterproofed stucco was applied directly to the exterior face of the hollow blocks. This was undoubtedly developed for residences on the theory that the 3″ of cork required in the original system was too expensive and in excess of the insulation requirements of a dwelling, while perfectly proper for industrial buildings, particularly those used for cold storage.

Comment. The Scarsdale system appears to have sufficient strength, and considerable fireproofing, and the insulation is so applied, except perhaps at the sill, as rather completely to dispose of the problem of condensation, ever present in steel structures.

Bibliography. 21, 44, 56, S.

Donaldson

Type II. Concrete Formed in Situ

Sponsor: C. W. Donaldson

History. A considerable number of houses of this type have been erected throughout the country. The locations include Leeds and Birmingham, Alabama, Chicago and Rockford, Illinois, Youngstown, St. Louis, Des Moines, and Atlanta. The Portland Cement Association estimates first use to have been about 1919. It may safely be placed in the period 1915–1920.

Structure. While this construction is classed as "concrete formed in situ," it differs from the usual monolithic structure in using metal-lath forms for floors, girders, and columns, and building the walls of cement plaster on metal lath.

The foundation wall is solid concrete up to ground line. Arched metal lath for floor forms is placed above the foundation, supported on stringers, and reinforcements for the girders are secured in the spaces above the arches. Concrete is then poured to give a level floor of 3½″ minimum thickness, with reinforced girts at all wall and partition lines. A frame of wood 2 x 4's or 2 x 6's, depending on wall thickness, is then erected, and window frames and door bucks are set in place. Column forms are erected, using two adjacent studs as ends and metal lath for inside and outside faces, bracing the members with a light wood framing. The arched metal lath for the second floor is placed, and the concrete is poured for the columns, second floors, and girts. The outside sheets of metal lath are attached and plastered on both sides with cement. The inside lath is then placed and plastered. Partitions are of metal lath with cement plaster to a total thickness of 2″. Walls and partitions are practically non-load-bearing, the load being carried by the floors and girders.

The exterior finish is stucco. Finish floors may be of any type.

Comment. The heat-conducting metal of the lath is almost continuous throughout the structure, making the problem of heat insulation important and probably difficult. Can there be much

DONALDSON

TYPE Concrete Formed in Situ
SPONSOR C.W. Donaldson
COUNTRY United States
DATE-1915-20

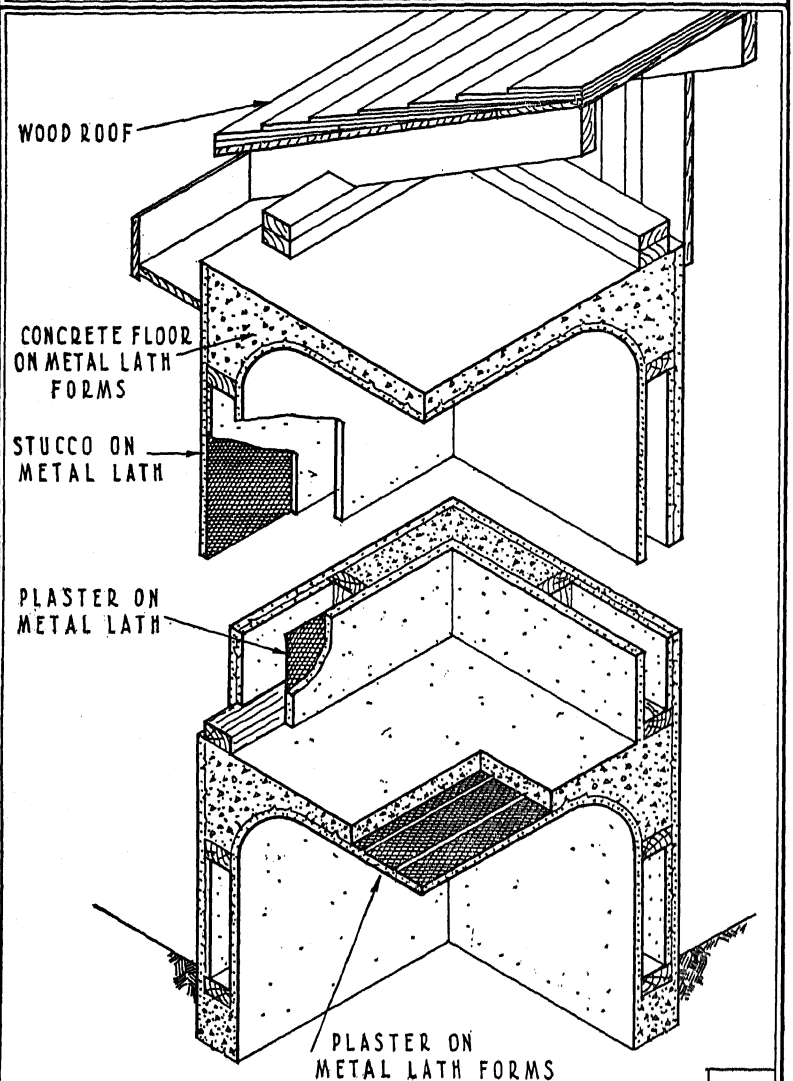

II

difference in the surface temperature of inside plaster from the arch of the outside girders, along the ceiling and down the partition walls, with a network of metal covered with cement to conduct the heat?

The economy of the system seems to depend largely on the amount of forming and bracing that is required in addition to the metal lath.

Bibliography. 50.

DYMAXION

TYPE Suspension
SPONSOR R. Buckminster Fuller
COUNTRY United States
DATE-1928

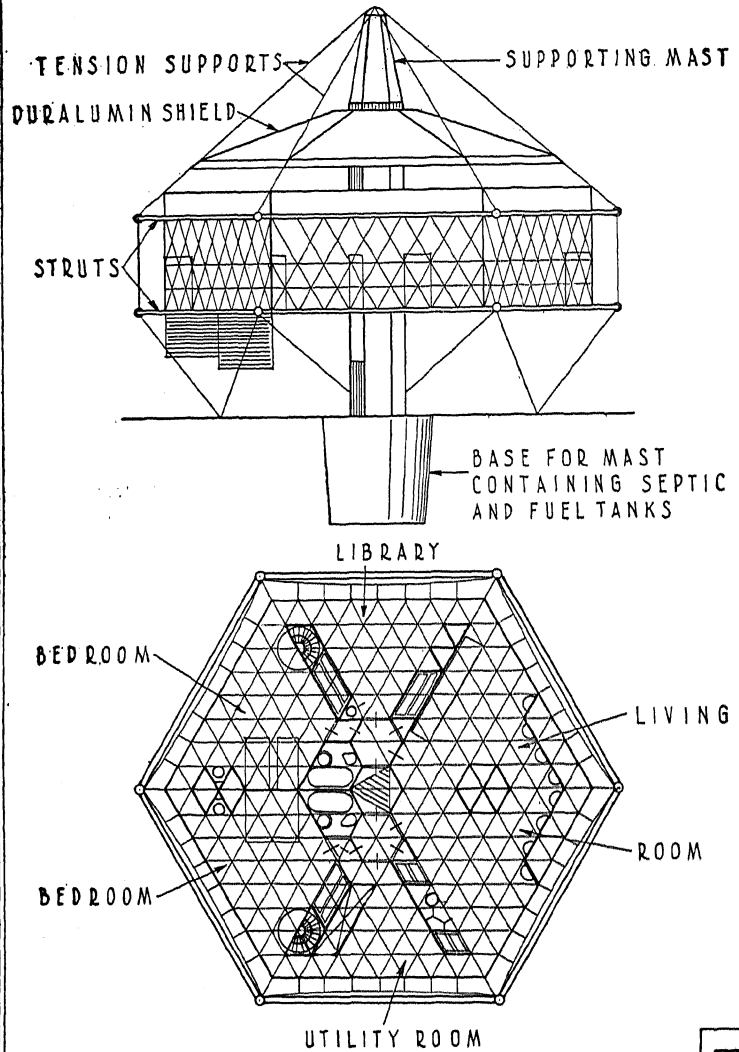

VII

Dymaxion

Type VII. SUSPENSION

Sponsor: R. Buckminster Fuller

History. It is hard to think of any other modern approach to housing that has been as thoroughly publicized as Dymaxion, unless it be those of General Houses, and, more recently, American Houses. Fuller began talking about his new creation in late 1928. By early 1929 photographs of the model he was then exhibiting were being reproduced in journals all over the land and the system was made the subject of numerous articles by feature writers. Then he created another model, and perhaps still others, and there were more exhibits and more articles. For reasons best known to the sponsor a house has never been built. In the last two or three years he has turned his interest more directly to his Dymaxion automobile, and apparently has let the house languish to some extent. In a statement in January, 1934, dealing with the house, Fuller used a good deal of space discussing the new car, but added the following remarks:[3]

"It takes material demonstration to win popular credence of scientifically-arrived-at theory. . . .

"The Dymaxion House is still as it has been for years — a theory only. Despite pragmatic criticism it has conscientiously been kept so. While theoretical it is immediately improvable by every scientific advance. Its monthly improvements and inclusions are vaster than the yearly refinements and inclusions in the automotive world, as it has never been burdened with 'overhead' nor with heavy industrial-investment earning-requirement.

"The Dymaxion House rather than being a fixed solution has been naught but a statement of the problem, progressively satisfiable in the latest manner.

"It might even be more broadly stated that the Dymaxion

[3] The Architectural Record, January, 1934, p. 10.

House has been merely an attitude. An attitude of willingness to think truthfully. . . . Dymaxion Houses may be conceived of as progressive composites of the best means of living as determined by universal survey."

Structure. It is particularly difficult to display Fuller's conception in anything like completeness in a small space — certainly impossible to determine the day-by-day progress it may make in view of advancing science. The diagram on p. 400 is a fairly close copy of illustrations once made by the sponsor. Briefly, the Dymaxion house then contemplated a mast of duralumin anchored to the ground through its base. In the base, a sunken pedestal, were to be septic and fuel tanks. Steel guys hanging from the top of the mast supported tubular floor beams in compression. These were formed into a hexagonal ring. Triangular plates of thin metal were connected to mast and frame by tensioned wires to form a floor deck. This deck, tending to sag, was covered with a pneumatic floor system to neutralize that effect. The structure was tied back to the ground with further guy wires.

The walls of the house were to be double plates of casein with a vacuum between. Thus the house was to be heated by the heat generated in the lighting and power systems. Air was to be sucked into the house through the top of the mast, then conditioned and circulated.

A central lighting system was to diffuse light to all parts of the building by means of prisms, mirrors, and lenses.

The upper deck was to be protected by a hood, independently supported by the mast and forming a sort of destroyer-deck cover for the outdoor play area. Partitions were to be soundproof, furniture built in, beds pneumatic, doors pneumatic so as not to jam a child's fingers. The house would weigh only 6,000 pounds complete, five rooms with all accessories. (See Neutra Diatom.)

Comment. Other accessories provided would be a laundry unit which would produce clean clothes, ready for use, in three minutes, incinerator pockets, revolving bookshelves with maps, globes, atlases, drawing board, typewriter, mimeograph, calculating machine, television unit, radio loud-speaker, and microphone.

Fuller estimated that when mass production was achieved the

6,000-odd pounds of the average completely equipped Dymaxion house would cost 50 cents each.

Such a description of Dymaxion does not begin to indicate the scope of Fuller's writings on the subject, which covered social needs, a revaluation of architectural and engineering principles, and to some extent those of economics as well.

Dymaxion, in short, should be regarded not merely as a house but as an expression of an entirely different philosophy of living — as such, a corresponding amount of sales resistance must be admitted.

Bibliography. 3, 28, S.

"E" FRAME

TYPE — Metal Frame - Close-spaced; and Panel
SPONSOR — Housing Company
COUNTRY — United States
DATE - 1934

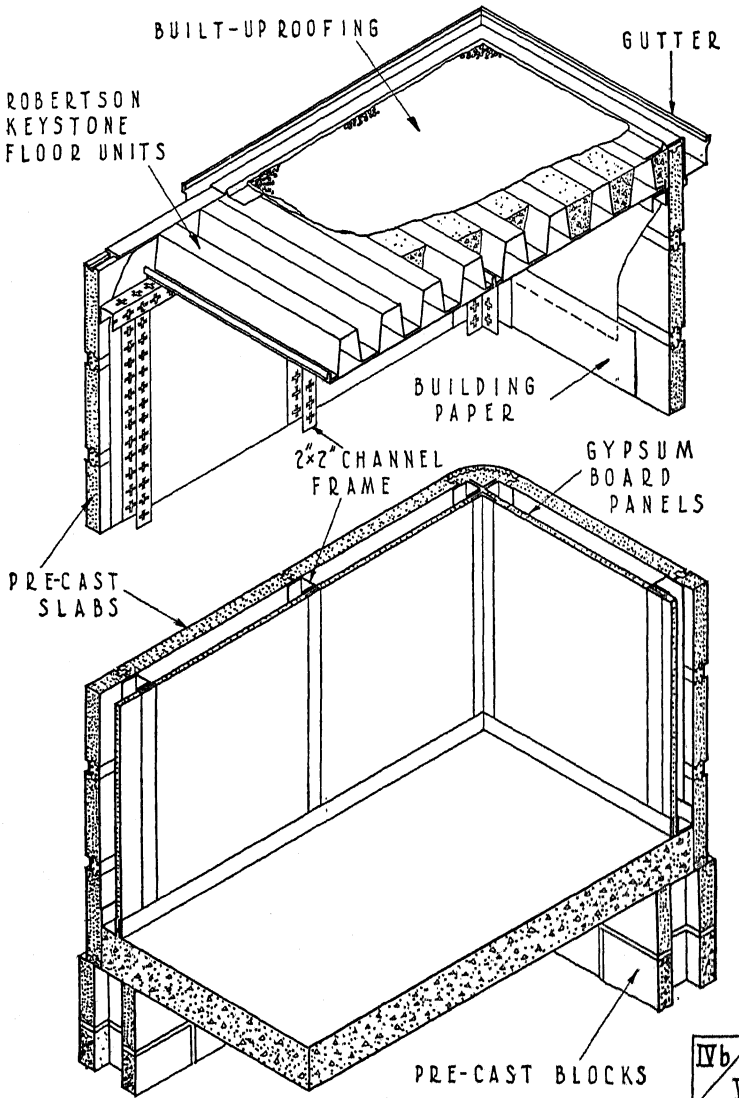

IVb / V

"E" Frame

Type IVb–V. Metal Frame — Close-spaced; and Panel

Sponsor: Housing Company

History. Like all the Bemis designs shown in this volume, this system was sponsored by a subsidiary company, Housing Company. Like all the others, it was first tried out in the laboratory and then incorporated into one or more houses. This frame, developed during the depression, was primarily a method of furnishing a very light steel frame suitable for automatic keying-on of finish panels. It has been developed in a large number of forms in the laboratories of Bemis Industries, Incorporated, and was first used in a garage in Newton, Massachusetts, in 1934. The construction shown in the drawing is of that garage.

Structure. The structure is intended to be used with pre-fabricated panels keyed on at both sides, but in this garage design of the house made it necessary to finish the exterior with pre-cast concrete slabs rather than pre-cast panels. The roofing of the garage shown in the drawing, employing Robertson Keystone steel units and built-up roofing, is not a fundamental part of the system but was employed as an experiment. The fundamental portion of the "E" Frame consists of framing members of steel and various types of keying-on panels. The pre-cast slabs shown are part of a wholly separate system, which may be included with the "E" Frame. They are described in this construction and were also used in the Plate Girder type of construction. (See Plate Girder.)

The fundamental steel framing unit of the "E" Frame is a channel 2″ on each side supplied with repetitive cross punchings as shown at 2″ intervals on each face. These channels form the girts and studs and sills. They are erected at close intervals, usually of the order of 2′–0″. Panels as used in the interior are applied by means of a batten strip, which may either be recessed into a rabbeted portion of the panel to form a flush-faced wall or may form a slight projection on the wall. These battens are backed with a steel plate, punched out into a series of hooks at the same

spacing as the slotted cross punchings on the studs. When these hooks are pushed through the slots and then pulled down a very short distance, they lock securely into the studs. Individual panels may be removed without impairing the rest of the structure. Other types of panels may be made. Some are made of double-ply gypsum to afford a very good flush-joint treatment, the outer layer of the gypsum board being set back from the inner layer by about 1″ in all directions. Pre-fabricated metal or wood trim can also be keyed on to studs by similar keying devices. Moreover, almost any type of exterior finish can be equipped with similar keys, it being possible to do this with pre-fabricated clapboarding. The standard pre-cast slab used on the exterior of this building is nominally 12″ deep (actually 10½″) and 24″ long (actually 22½″), the difference between nominal and actual dimensions being the thickness of the joint strip. Slabs are 2″ thick. All other necessary modular sizes are provided to give complete flexibility to the wall. The slabs have horizontal and vertical grooves as shown in the drawing. Reciprocating with the horizontal grooves are a series of long (8′–0″ to 10′–0″) pre-cast aligning units of the order of 1½″ square. The projecting tongues on these units, however, are so placed that when the unit is used in one direction a flush wall is provided, and in the other a wall with a rusticated joint. The flush wall is shown in this drawing, the rusticated joint in the Plate Girder drawing. The flange may be keyed to the backing by screwing through the aligners various clips developed for the backing, and in the case of the "E" Frame by bolts inserted through holes in the aligners and carried in and bolted into the repetitive punchings on the studs.

Comment. Developed primarily as a partition construction, the "E" Frame nevertheless has shown adaptability to house use, certainly for one story. Heavier gauges might be required for buildings of greater height. The application of different types of exterior finish, automatically keyed on, has not been thoroughly explored, but the wide variety of experiments tried on the interior indicates serious possibilities for this type of pre-fabrication.

Bibliography. S.

Earley

Type III. Pre-cast Unit

Sponsor: Earley Process Corporation

History. This system is the outcome of research by John J. Earley in the pre-casting of thin, dense concrete slabs faced with ornamental colored aggregate. The development of this patented process began in 1915 with the construction of the concrete retaining walls of Meridian Hill Park at Washington. Since then the process has been used in many important structures. In 1934, Earley was awarded the Turner gold medal by the American Concrete Institute "for making concrete an architectural medium." Earley Polychrome House No. 1, in the suburbs of Washington, was finished early in 1935. At least one other house has been built by this construction.

Structure. The distinctive feature of the system is the wall construction, consisting of large pre-cast concrete slabs, suspended from reinforced-concrete columns poured on the site. Floors and roof are of the conventional wood-frame type, although the sponsor expects to improve these features later.

An ordinary concrete foundation wall is prepared, slotted to receive the ends of the floor beams, the bolts of the sill, and the ends of the three vertical rods of the poured columns. The floor joists are laid and the wood sill is bolted down to the foundation. The wood frame is then erected with studs spaced about 2′–0″ on centers. The pre-cast slabs are set on wood wedges with a chain hoist and the joints are left open with about ⅛″ clearance for expansion. The cracks are then backed with lead foil between the slab and the supporting columns, and the reinforcing rods for the columns are placed. Anchors, cast in the wall slabs, are hooked around the reinforcing rods, with a continuous rubber gasket to seal the vertical joint and to hold the slabs out from the columns. The columns are then poured, and as soon as the concrete is set the wood wedges under the slabs are removed. The slabs are thus suspended from the columns; and the rubber gaskets, together

EARLEY

TYPE Pre-cast Unit
SPONSOR Earley Process Corporation
COUNTRY United States
DATE-1935

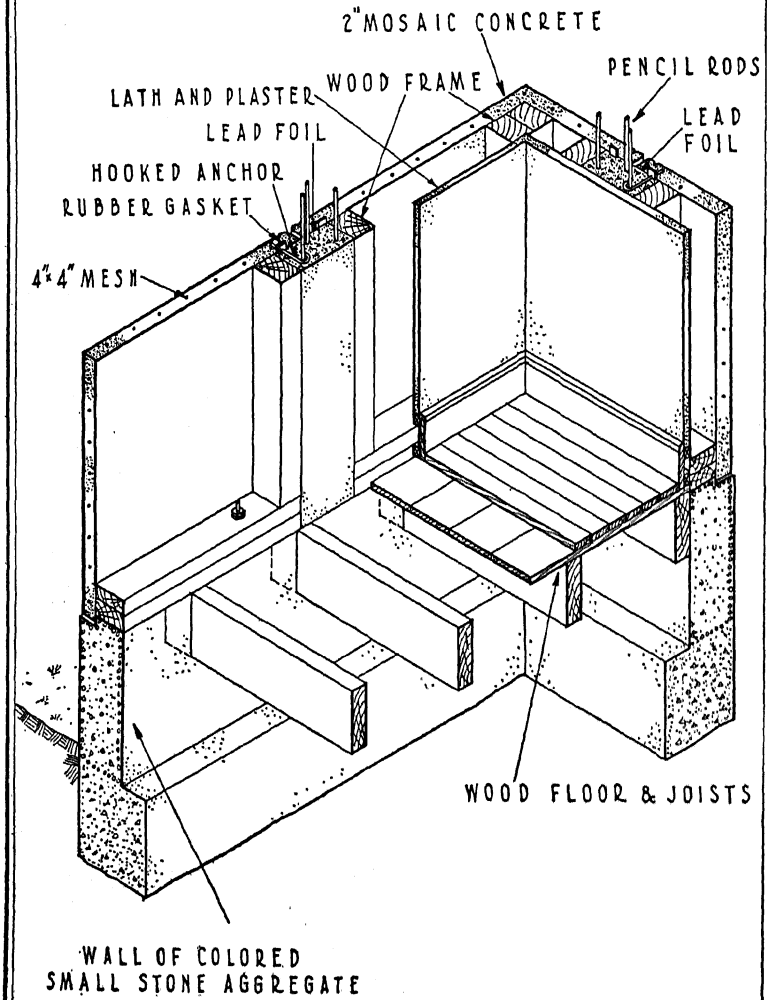

III

with the clearance spaces on all sides of the slabs, allow for expansion and contraction. The slabs form an articulated envelope around the structural framing.

The interior finish may be of any type, applied to the wood framing with the intervening space filled with rock wool.

Special units are pre-cast for wall corners. All units are complete with moldings, color, ornament, metal sash, and cornices, and leave the shop in a finished state.

Comment. The Earley slab process offers very interesting possibilities in decoration and architectural treatment. By using aggregates such as quartz, glass mosaic, chipped tile, or jasperite, varied and pleasing color effects may be had, running from greyish-white to brilliant colors. The general appearance is smooth, clear-cut, and precise. Flutings, moldings, and cornice treatment combined with the color make possible an artistry and craftsmanship not previously available for small-house construction.

The cost of this construction at present is probably beyond the range of low-cost housing. The sponsor expects to reduce costs materially by achieving larger-scale production, and also by improving other features of the structure, such as floors and roof. Additional problems would have to be solved in a climate colder than that of Washington, D. C. Water freezing in the open joints and condensation on the columns would require careful study. On account of the size of the pre-cast units, it would be expensive to ship them very far from the molding plant.

Bibliography. 18, 38, S.

EDISON

TYPE Concrete Formed in Situ
SPONSOR Edison Cement Corporation
COUNTRY United States
DATE - 1907

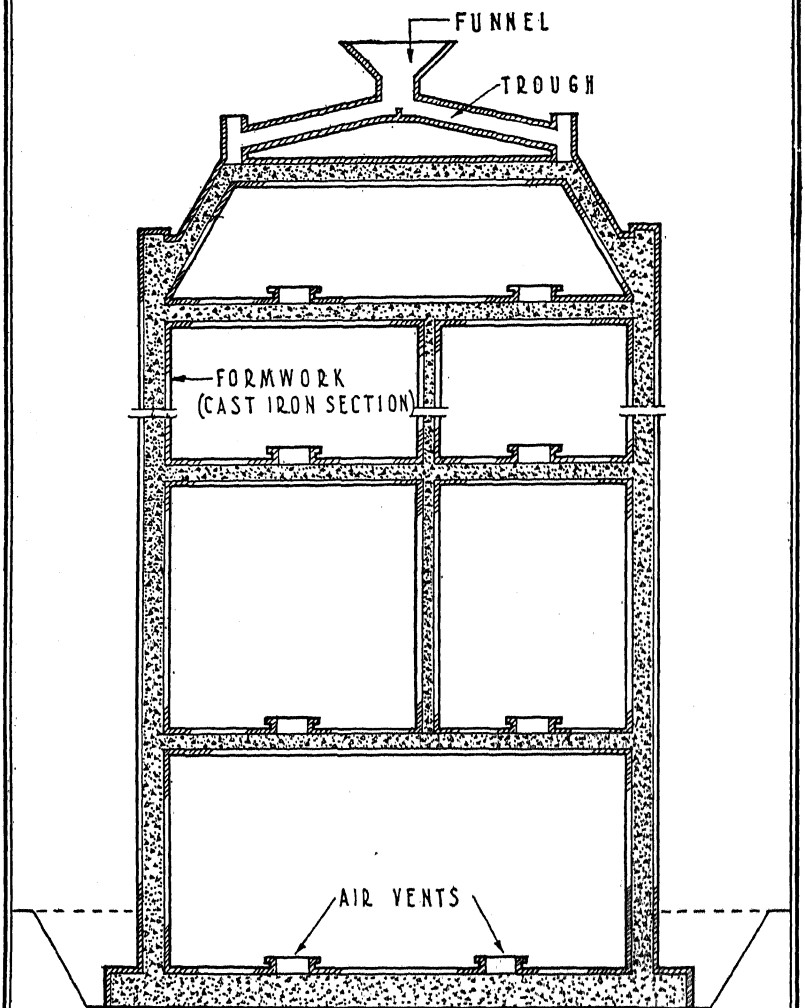

II

Edison

Type II. Concrete Formed in Situ

Sponsor: Edison Cement Corporation

History. The world-famous inventor, Thomas A. Edison, was for years interested in the problem of producing inexpensive houses of poured concrete. In 1907 he prophesied this type of low-cost housing, and his ideas were given considerable publicity. Patents were applied for in 1908 and granted in 1915 and 1917. Later, Edison became much interested in the Ingersoll System, which followed closely his theories of how a concrete house should be built.

Structure. The complete house was to be built in two pouring operations, the first for the foundation footing and cellar floor, and the second for the entire house structure. The special features of the system related entirely to the method of forming and pouring. The forms for the house were to be erected on the footing and consisted of multiple units of cast iron, bolted together through their flanges. Opposite units were spaced and held together by bolts which passed through bosses in the middle of the units. These forms embraced the finished door and window frames, the soil and vent pipe, the flue lining for the chimney, electric conduit, and all necessary grounds for the finishing operations. The molding was to include ornamental treatment, front steps and cellar stairs, and some accessories, such as bathtubs. The Edison system differed from the Ingersoll in having top plates on the floor construction, and in carrying the construction loads, concrete, and forms on the forms themselves instead of on a separate column and truss arrangement.

The top of the form structure included a centrally located funnel into which the concrete was poured. This was connected to the various parts of the structure by distributing pipes or troughs, which radiated out from the funnel. Air vents were placed in the floor plates to prevent air pockets. A special concrete mixer was located near the structure, and the concrete was raised from it to

the funnel by an endless bucket conveyor. An important feature of the pouring system was an accurately controlled, steady rate of mixing and pouring. The hydraulic pressure on the forms was reduced by using a rapidly hardening concrete and by pouring slowly so that the lower sections hardened before the total vertical height of liquid concrete became excessive. No tamping or vibrating was used in the molding process. Reinforcing rods were to be used in both directions, tied together with wire at points where they crossed.

Wall and ceiling finish was the concrete, white-coated, or lath and plaster.

Comment. The interest of this system lies in the fact that Edison, nearly thirty years ago, predicted that small inexpensive houses would be cast completely of monolithic concrete. His prophecy of low cost may not have been entirely fulfilled, but we have seen a number of large housing developments of the monolithic concrete type. A complete set of cast-iron forms for a small house was estimated to cost the builder about $30,000, but it was claimed that the cost per house could be made very small by using the same forms for a large number of houses. If depreciation and cost of shipping, handling, and erecting were added to the first cost, the charge per house would still appear to be high, except under ideal conditions of a large development, restricted to a small area and conveniently located as regards source of materials, transportation, and levelness of the site. Today probably the heavy cast iron would be replaced by lighter steel forms.

Bibliography. S.

Enterlocking

Type I. Pre-cut Lumber

Sponsor: Long-Bell Lumber Sales Corporation

History. Enterlocking Lumber, patented and brought into public view in 1933, is sponsored by one of the most important corporations in the lumber industry. Introduced at a time most unfortunate for the building industry as a whole, commercial experience with the method so far is not illuminating.

Structure. Enterlocking Lumber is nothing more or less than the latest effort of the lumber industry to pre-cut its framing members. More elaborate than previous efforts, Enterlocking also affords accurate and rapid methods of alignment and spacing of the framing elements of a wooden building. It envisions pre-cut lengths of sufficient diversity to permit framing any ordinary building and the shaping of those elements for quick and accurate assembly.

The system can best be understood by inspection of each element, remembering always that they correspond quite exactly to like elements in a conventional wood frame. There are two basic kinds of lock, a wedge-shaped notch and tongue for studs and joists and a rounded one for rafters.

Sills, plates, and the like, therefore, have mortises cut in them, as shown under "notch for gable stud." These members are 2″ x 4″ and 2″ x 6″, come in 8′–0″ to 20′–0″ lengths, and have mortises at 16″ centers to accord with conventional stud spacing.

The studs, 2″ x 4″ and 2″ x 6″, come in three precise lengths, which are nominally 8′–0″, 9′–0″, and 10′–0″. They are tenoned at their ends, as shown, and can thus be driven into the mortises provided in sills.

Joist headers, 2″ x 4″ to 2″ x 12″ in cross-section and in lengths varying from 8′–0″ to 20′–0″, have mortises like those of the sills, at 16″ centers. The larger dimension of the mortise is at the top. Joists 2″ x 4″ to 2″ x 12″ in cross-section and in

ENTERLOCKING

TYPE Pre-cut Lumber
SPONSOR Long-Bell Lumber Sales Corporation
COUNTRY United States DATE-1933

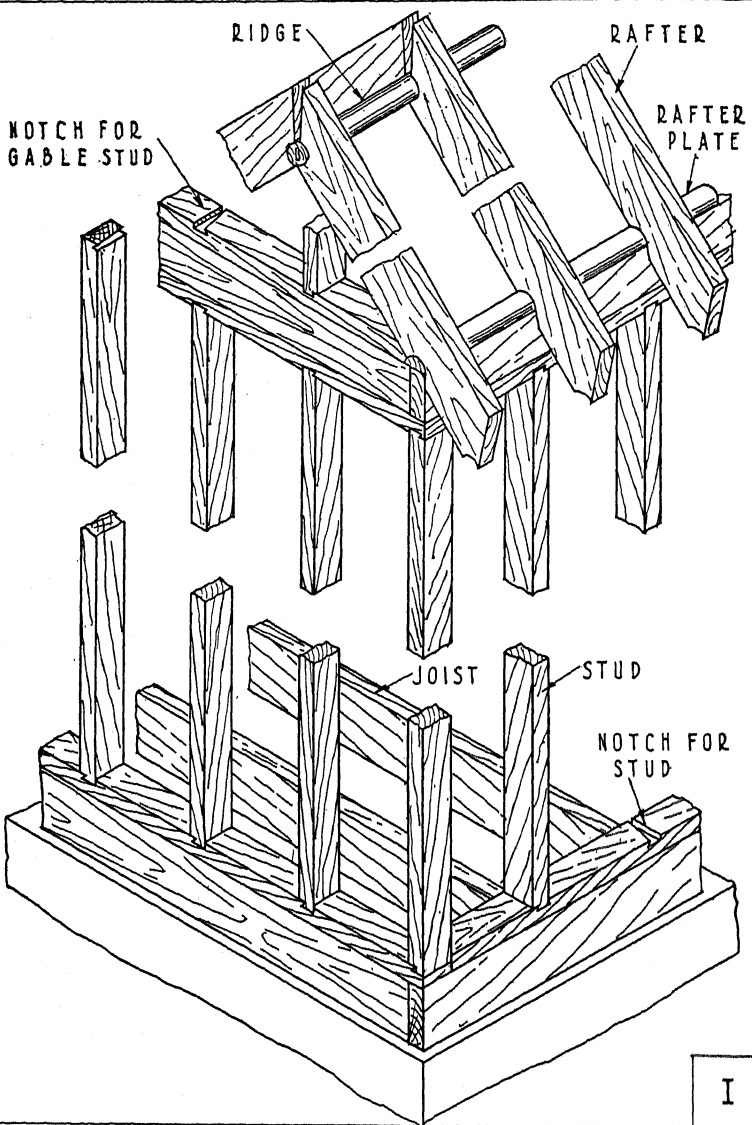

I

nine standard lengths are provided at their ends with corresponding tenons.

The arrangement of the rafters is most ingenious. The rafter plate is a half-round, 1⅝″ x 3¼″, 8′–0″ to 20′–0″ long, notched on 16″ centers, as shown. Rafters, 2″ x 4″ and 2″ x 6″, in nine lengths, have a number of circular notches so positioned that on a 9″ x 12″ pitch each rafter can be used for four different spans of successive 16″ multiples. The use of pitches from 6″ x 12″ to 14″ x 12″ is also accommodated by this ingenious arrangement.

The company also furnishes pre-cut window and door headers, gable-end studs, hip jack and valley jack rafters, bridging, fire stops, fillets, square-end board stock in all standard patterns, and diagonal-end sheathing, matched and square-edge, with ends cut on a 45-degree angle.

The system contemplates design of the building on a 16″ unit, eliminating of waste by cutting, improvement of joints by wedging, and proper seasoning of the right kind of material for each element of the building.

Comment. Scarcely a pre-fabricated house, Enterlocking is none the less one of the most carefully thought-out efforts in the field of improved structure. It represents close and careful planning from beginning to end. It should simplify ordering of material, eliminate wide variety of grades of lumbers, afford a reliable construction with a definite loan value, and save money in erection.

Bibliography. S.

FELLGREN

TYPE Concrete Formed in Situ
SPONSOR C. W. Fellgren
COUNTRY United States
DATE - 1923

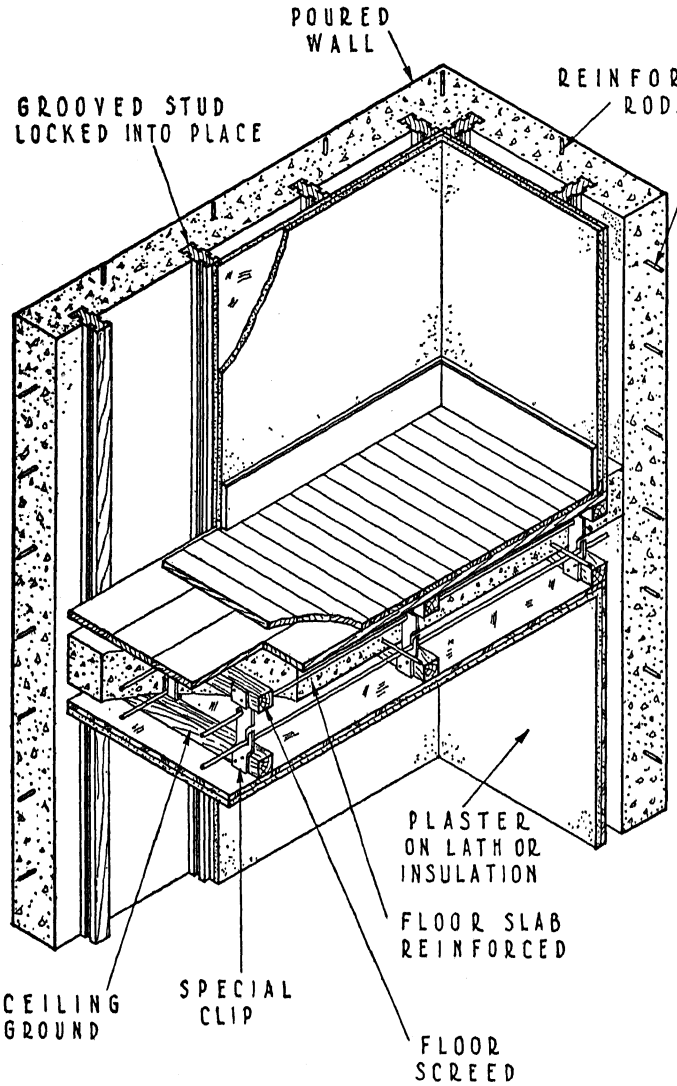

II

Fellgren

Type II. Concrete Formed in Situ

Sponsor: C. W. Fellgren

History. This system of monolithic walls and floors has been used for over 75 small structures in the Chicago area. It was used in 1923 by F. O. Campe in erecting several small dwellings at Morton Park, Illinois.

Structure. The walls are solid reinforced concrete, poured between wood panel forms, 2′–0″ to 3′–0″ high. The outer panels consist of vertical boards, backed by horizontal stringers, and may be of any convenient length. The inner panels are placed between 2″ x 4″ studs, which remain in the wall permanently as furring for lath. The studs are grooved, two grooves on either side. Concrete fills the inner grooves and locks the studs to the concrete. The outer grooves receive the edge of a vertical batten, nailed on one edge of the panel, and latches pivoted to the panels near the opposite edge, by means of which the panels are secured in place and removed. The outside panels are secured to the studs at the spacing desired by lag screws passing through holes in the stringers and engaging the studs. As soon as the concrete is self-supporting, the lag screws are withdrawn and the holes in the concrete pointed.

Before pouring the floor slabs, wood strips are laid above and below, connected and spaced by metal strips which are notched to support the reinforcements in place. The wood strips serve as nailing grounds for wood floors and ceiling lath.

The outside walls are generally stuccoed.

Comment. The wood studs appear to give the equivalent of wood framing, which is in addition to the thick reinforced-concrete wall.

Bibliography. 50.

FERRO-ENAMEL

TYPE Metal Frame-Close-spaced
SPONSOR Ferro-Enamel Corporation
COUNTRY United States
DATE - 1932

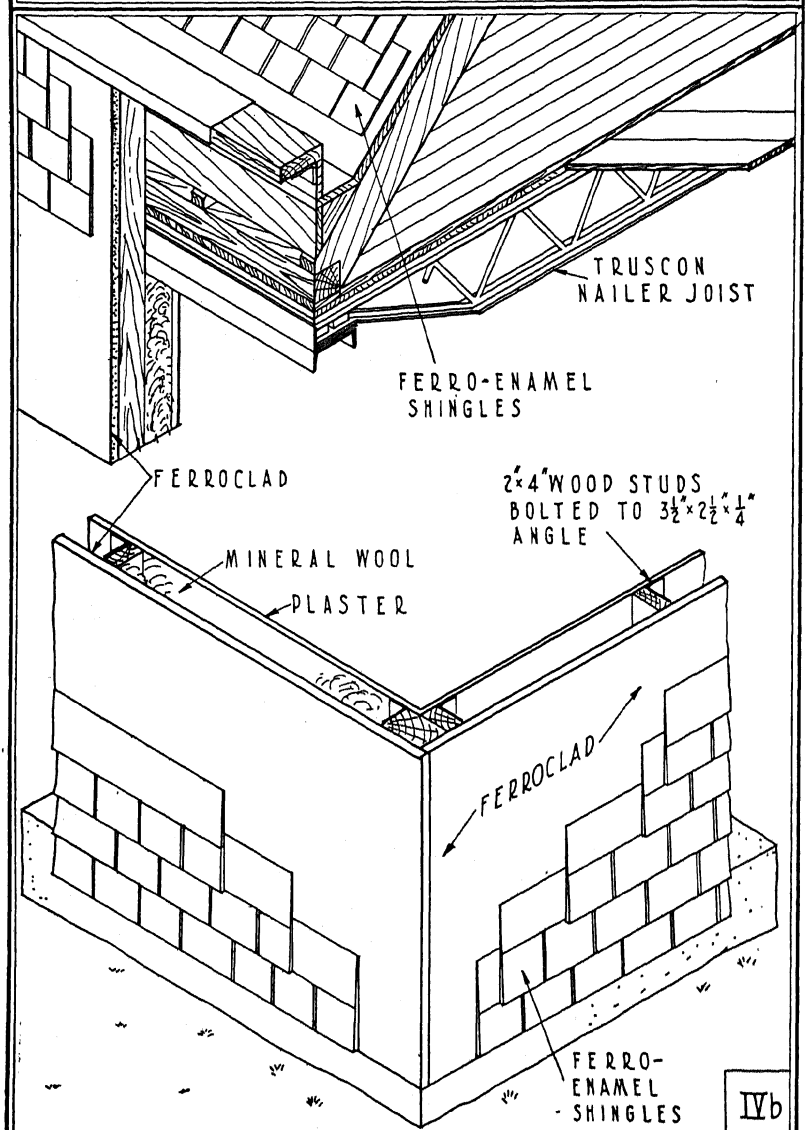

IVb

Ferro-Enamel

Type IVb. METAL FRAME — CLOSE-SPACED

Sponsor: Ferro-Enamel Corporation. Residence of Dudley Clawson, Cleveland, Ohio. Designed by Charles Bacon Rowley and Associates, Architects.

History. Although Ferro-Enamel tiles were later used on the American Rolling Mill Company house at the Century of Progress in Chicago, and that building was sometimes loosely referred to as the "Ferro-Enamel house," the system under discussion here must not be confused with the American Rolling Mill product. It resembles it only in the use of the Ferro-Enamel tiles. The Ferro-Enamel system was used in a house erected in Cleveland in July, 1932. The primary purpose of the erection was said to be to demonstrate the use of porcelain-enamel shingles as exterior building material. These shingles have since been frequently used as roofing; there seems to be no evidence of further houses built in accordance with this conception. (See also Armco.)

Structure. The house had a definite structural frame, largely of angles. The centering of these angles when used as studs was slightly less than 4′–0″, greater, in other words, than conventional wood studding. None the less, the system is one of studding rather than of beams, girders, and columns, and must be classed as closely spaced frame. The studs were headed by steel girts from which bar joists framed to form the structural support of the floor. The structural system was shop-fabricated and then welded together on the site.

Interior wall finish was formed by wire lath attached to the studding and plastered. Inter-stud spaces were filled with mineral-wool insulation. Ceilings were also of metal lath and plaster, the inter-joist spaces at plate level being stuffed with mineral wool; floors consisted of planks and wood finish supported on bar joists. The roof was entirely conventional except for the Ferro-Enamel shingles.

This shingle, used also on the walls, was made of porcelainized

metal attached to an asphalt backing, permitting strips of at least 3′–0″ in length. Except for interiors, where the shingles were cemented, when used, to grooved fiberboard panels, the shingle strips were attached to the structure by nailing. Between them and the structure itself on exterior walls was a layer of 1″ Ferroclad (a sheet of fiberboard with metal faces). In order to provide nailing grounds for the Ferroclad panels, wood nailing pieces 2″ x 4″ were attached to the steel studs.

Comment. Like many other systems, this one abandons effort at pre-fabrication as soon as it is confronted by the pitched-roof problem. The materials used are all readily available, and well and favorably known. The building should be of long life, well insulated, and should offer no serious difficulties in erection. Evidently there is no great amount of pre-fabrication. The free use of metal lath and plaster means that the house is not " dry " during construction. Porcelain-enamel shingles themselves as well as Ferroclad are suggestive building materials for the pre-fabricating industry to consider.

Bibliography. 3, 9, 28, 32.

FIELD

TYPE Metal Frame-Close-spaced
SPONSOR Howe and Lescaze
COUNTRY United States
DATE - 1933

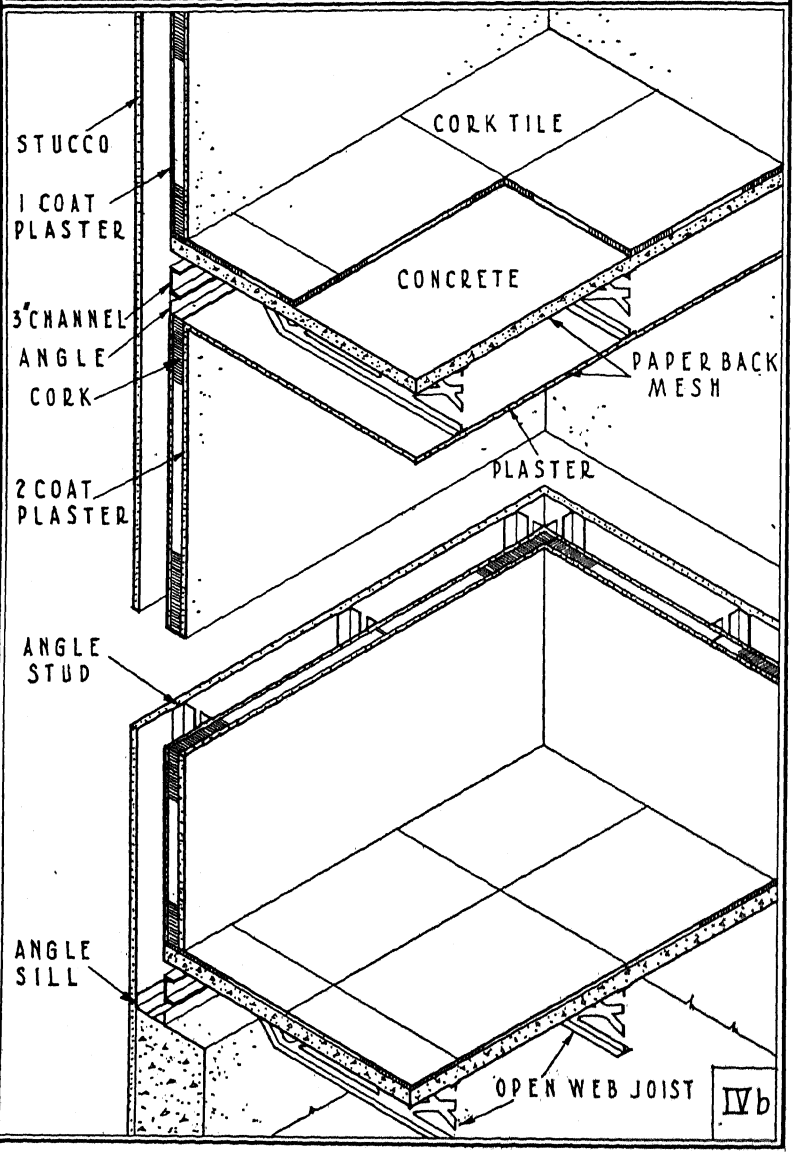

Field

Type IVb. METAL FRAME — CLOSE-SPACED

Sponsor: Howe and Lescaze, Architects, New York. Structural Engineer, C. O. Skinner.

History. This house for Frederick V. Field was built under the direction of his architects, Howe and Lescaze, in New Hartford, Connecticut, in 1933. It is essentially a steel and concrete house, in the International Style, and undoubtedly the light and ventilation obtainable by the use of steel framing influenced the designers' choice. It is not put forward as a method of pre-fabrication.

Structure. The studding of the building consisted of paired 1½″ x 1½″ x ⅛″ steel angles, 3¾″ back to back and connected every 3′–0″ by welded steel strapping. These studs, spaced usually at 2′–0″ centering, were welded to an angle sill. Girts were provided by 3″ channels welded to the studding. The supporting members of open-web joists passed over the top of the girt channels and into the air space, thus obtaining full bearing on the channel. A further angle was welded to the studding below the channel girt to define the ceiling.

The exterior finish was formed of three coats (1″) of Portland cement stucco applied to paper-backed wire mesh. Inside, one coat of plaster was applied to paper-backed mesh. To this was applied 1½″ of cork and then two coats of plaster. The ceilings were plaster on paper-backed mesh, the floors cork or linoleum tiles laid on 2″ of concrete placed on paper-backed mesh which was supported by the open-web joists. A flat roof employed the same general construction as the floors. Quarry tiles, 6″ x 6″, set on built-up roofing, formed the roof surface. Steel casement sash were set into angle frames and welded to the structural framing. The doors were flush steel with no trim, and the interior stairs were of structural steel, cork-covered, with aluminum nosings. The general interior finish was flat oil paint.

Comment. A thoroughly insulated, fireproof, and strong house, which should have exceedingly long life.

Bibliography. **62.**

FLAGG

TYPE Concrete Formed in Situ
SPONSOR Ernest Flagg
COUNTRY United States DATE - 1922

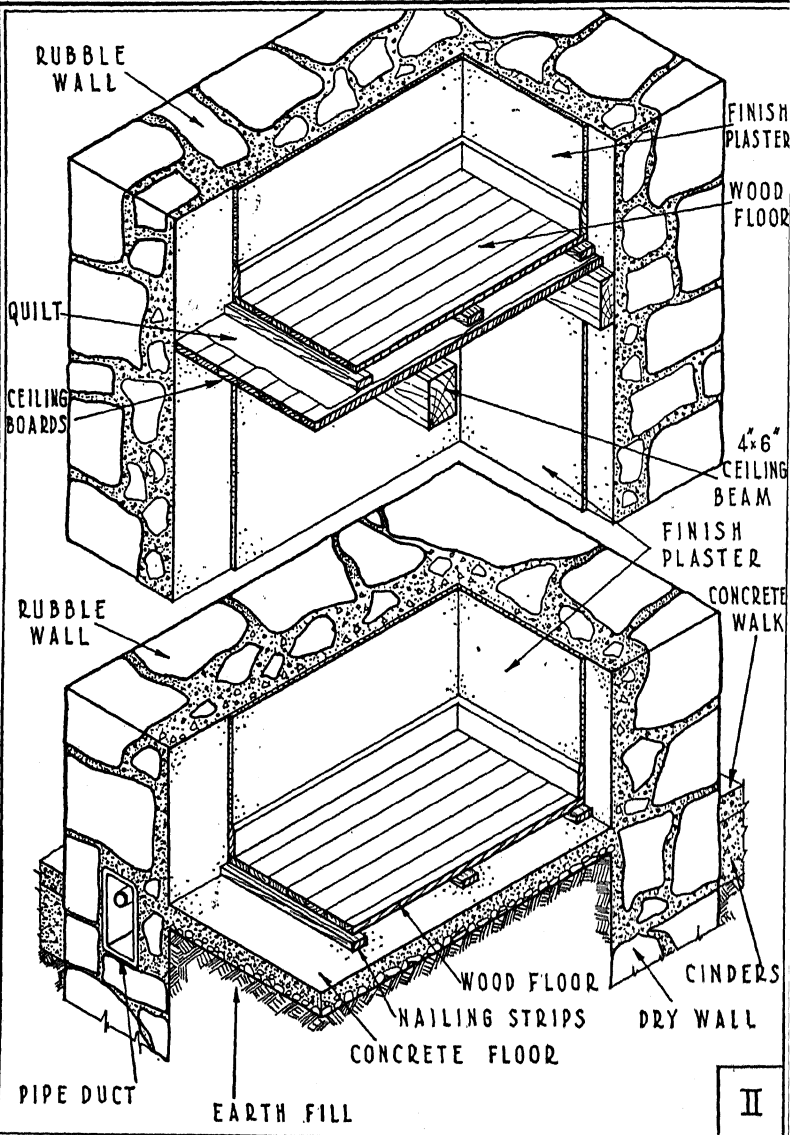

II

Flagg

Type II. Concrete Formed in Situ

Sponsor: Ernest Flagg

History. In 1922 Ernest Flagg, a well known and highly regarded American architect, published a book called "Small Houses." [4] In this work Flagg presented a series of essays on his ideas of the fundamental principles of design and desirable methods of construction. Many of the latter were quite new, and originality was evident on every page. Flagg not only wrote a book; he practised what he preached. Even at the date of publication he was able to show in his book photographs of several buildings he had constructed on his Dongan Hills estate, Staten Island, and since publication he has consistently added further buildings embracing similar principles.

Structure. The principles of the Flagg construction really combine to form not so much a system as a series of improvements on existing methods of construction. They look less toward prefabrication than toward simplification and redesign of certain traditional practices, plus a few definite innovations.

The entire Flagg method is postulated upon the use of a module in design, particularly in plan. The Flagg module is set at 3′–9″, being divided into five parts of 9″ each. These modules are laid out on the inside of the exterior wall, which is masonry, and the thickness of which does not necessarily have any fixed relation to the module. Inasmuch as the Flagg partition is very thin, the modules are laid out from exterior wall to exterior wall and nominal room dimensions ignore the partition thickness. This module, Flagg claims, improves and simplifies design, works out well for room dimensions and story heights (7′–6″ and 11′–3″), and is well adapted to the use of conventional lumberyard lengths of floor timbers.

The building contemplates a masonry wall, wooden floors,

[4] Flagg, Ernest, "Small Houses — Their Economic Design and Construction" (Charles Scribner's Sons, New York, 1922).

pitched roofs with a cheap roofing, and the ridge dormer. The architectural style usually suggests the English cottage. The houses are generally cellarless.

The first innovation occurs on the footing, which Flagg preferably carries about 18″ below grade, rather than down to frost line, protecting it by a concrete frost walk which at once takes the place of a sidewalk, serves the purpose of the ground-level drains of France, and insulates the foundation wall from frost damage. Above this footing the masonry wall begins.

Dongan Hills and adjoining districts abound in a beautiful stone, well stratified so that it breaks into relatively flat pieces. The Flagg walls use this stone in a mosaic rubble. The forming scheme consists of wall-height uprights with holes in them at intervals, and sleepers bracing the uprights and tying them together. Form boards or shuttering are placed inside the uprights as the work progresses. The flat stones are laid without mortar and more or less at random against the inner face of the outer form board, and a concrete mortar, including in addition to cement and sand a large volume of broken stone, is forced into the crevices between the stones from the rear side and also thoroughly into the space between the stones and the internal form board. After two or three courses have been poured, the structure is tied by tie wire. When the bottom has set, the bottom shutters are removed and used above for further forming, the remaining boards being held up by toggle pins pushed into the holes in the uprights. When the forms are finally stripped, the result is a wall with a smooth inner concrete face ready for the reception of plaster, and a rough masonry exterior which is then pointed up into a truly beautiful stone wall.

There is no unnecessary elaboration in a Flagg house. Flagg does away entirely with the plastered ceiling and almost always lets the beams of the ceiling show. Thus the ceiling of a room is really formed by the under-flooring of the floor above. To accomplish this result attractively and yet reduce sound transmission, Flagg employs wider and shallower joists than are conventional. To the upper surface of these he attaches boarding, fairly smooth on the bottom side at least. He then applies a layer of quilting and some screeds, which he prefers not to nail to the under-floor. To these screeds, floating on insulating quilt, he then nails the upper and finish wood floor.

The Flagg interior partitions are about 2″ thick, and are formed by suspending a taut sheet of burlap in the desired position and plastering both sides of it simultaneously. It is remarkably strong and effective.

In keeping with English architecture and Flagg's general ideas, the roofs have rather steep pitches. Ridge dormers (small windows starting from the ridge and so constructed that they can remain open all the time for ventilation, if desired) are characteristic of the Flagg roof.

The Flagg house also contains innovations in planning, and in fireplaces and other accessories that need not be included in this discussion.

Comment. This Dongan Hills estate and the thought behind it form a remarkable monument to a serious thinker in the field of small-house design. The houses are comfortable, livable, and attractive, even when very small. Built on the estate, they are, according to the Flagg cost sheets, economical. The question of proper and necessary charges for the stone in other localities has never been wholly settled. The system has never made any claim to pre-fabrication, but certainly the entire house is well and completely thought out and is a pioneering work.

Flagg has subsequently proposed an improved door hinge, and has changed his roofing to cover the roll roofing he previously used with a single layer of slate, still keeping the weight much below that of an ordinary slate roof, and has developed a use of cast-stone blocks for building walls. These blocks are hollow and set without use of mortar except pure cement about the consistency of cream. Piers composed of the blocks are set up at intervals along the line of the wall, one at each corner and at each side of every opening. The blocks provide a hole, continuous from top to bottom, in which an iron rod is placed and concrete poured. Intervals between piers are filled with 4″ of brick, plastered on the inside with Portland cement.

Bibliography. 50, S.

FOREST PRODUCTS

TYPE Panel
SPONSOR Forest Products Laboratory
COUNTRY United States
DATE - 1935

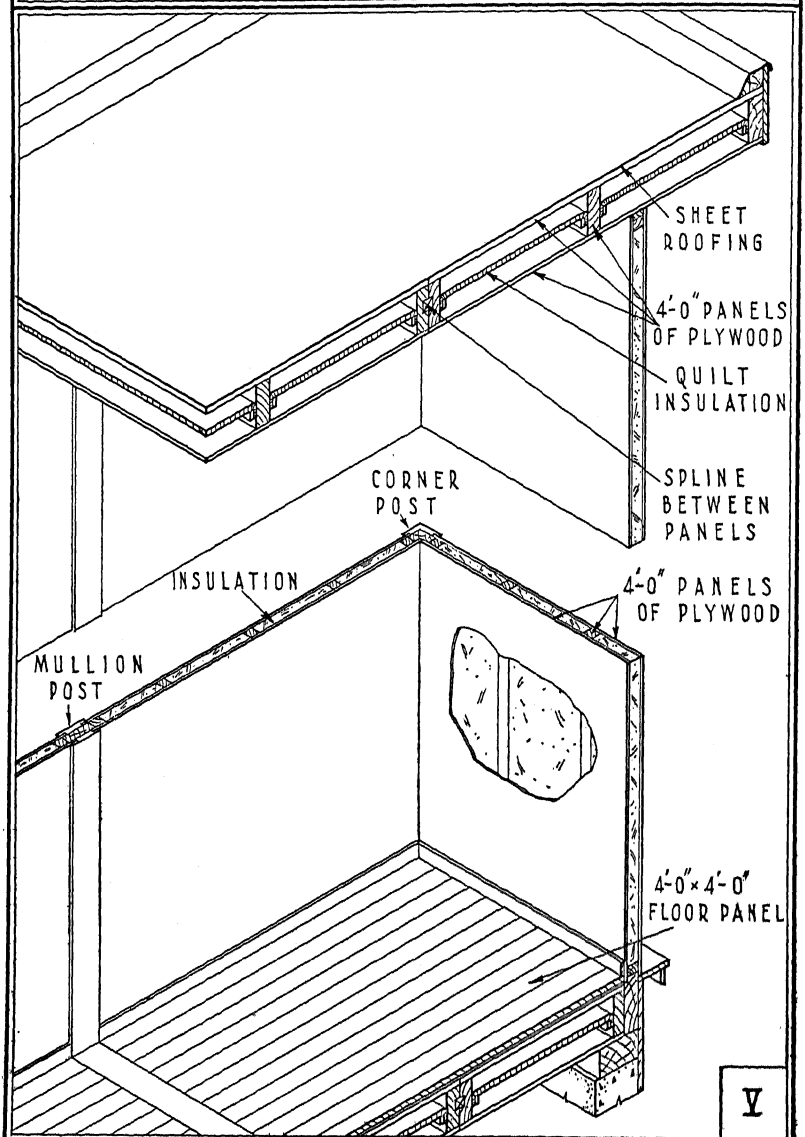

V

Forest Products

Type V. PANEL

Sponsor: Forest Products Laboratory

History. The "stressed-covering" principle was developed shortly after the World War, when the practice of covering the framework of airplane wings and fuselage with fabric was largely replaced by the design of a covering integral with the framing, which aided in resisting stresses, both bending and torsional. This is the universal aircraft practice today. The Forest Products Laboratory did considerable research on the use of plywood in aircraft design, and soon recognized the advantages of the plywood box unit, assembled with glue to conform to the "stressed covering" principle, as a structural unit for pre-fabricated houses.

Most of their research on this unit has been of a fundamental nature, to determine its structural properties and the life of the glue joints. By 1935 the engineering data were sufficiently complete and favorable to warrant the application of the system to a small bungalow. A four-room bungalow, 21′–0″ x 29′–0″ over-all, was erected at the Laboratory. The bungalow was later taken down and reassembled for exhibition at the Home Show in Madison. The second assembly was accomplished by seven men in 21 hours. The sponsors believe that the soundness of the stressed-plywood construction has been proved from the point of view of structural strength and economy, but that the features of practical design, such as window details and joints between panels, should receive further research.

Structure. Walls are built of panels, about 4′–0″ wide and of story height, with an overall wall thickness of about 2″. The panels consist of a wood framing of vertical studs, about 2′–0″ apart, and horizontal pieces, top and bottom, to which sheets of three-ply, ¼″ plywood are glued to provide both exterior and interior wall surfaces. The glue joints in these panels are reported to be at least as strong as the wood itself, so that the entire panel

acts as a structural unit. The plywood is said to provide bracing ample for any structural requirements in small houses.

Adjacent wall panels are joined through a vertical mullion member, grooved on two sides to receive the edges of the plywood sheets, which project ¾″ beyond the marginal framing pieces. The grooves are filled with mastic and the panels are forced into place, sealing the joint and protecting the plywood edges. Special vertical mullions are used at wall corners and at the junctions of partitions with outside walls. Windows are built into the panels with the sash hung completely outside the plane of the wall.

Floor panels are about 4′–0″ wide and 5⅜″ in overall depth. This depth of section is stated to be sufficient for spans up to 13′–6″, which is the longest span in the bungalow. The top plywood coverings are ⅝″, five-ply plywood, and the lower coverings are ⅜″, three-ply. The panel framing consists of joists, about 2′–0″ apart, and end pieces. Adjacent panels are joined with continuous splines to distribute concentrated floor loads.

The roof is flat, built of floor units, with an overhang beyond the outside walls of more than a foot. The roof covering consists of a continuous sheet of built-up roofing, with openings cut for the chimney and the central roof drain.

Heat insulation is supplied in quilt form at the center of each wall, floor, and roof panel.

For exterior wall finish, four coats of paint are applied to the plywood: an aluminum priming coat, a second coat of aluminum, a lead-and-oil undercoat, and a lead-and-oil finish coat. Interior finishes are shellac, wax, or paint applied directly to the wood; finish floors are pre-fabricated in four-foot squares of oak strips glued to plywood. The plywood projects ⅜″ on all sides. The squares are laid in place and secured to the floor panels by means of T-shaped parting strips. The bathroom floor is made of a wood plastic, laid in small tiles, consisting of finely powdered wood that is treated chemically and formed under heat and pressure.

Pipes and wiring for accessories are included in the wall and floor panels at time of manufacture. Heating is supplied by a hot-air circulator placed in the living room. Throughout the house all unessential decorative features of trim and finish are eliminated.

Comment. This system permits a considerable amount of shop fabrication and pre-finish. The materials used are plentiful and

not expensive. None of them are heat conductors so that no problems of condensation arise. The units are not too heavy to handle. As plywood changes in dimension very slightly with the changes of moisture condition, the difficulty of shrinking and swelling has been substantially reduced in this system. The glued joints have been relied upon to such an extent that the question of their strength and permanency is of great importance.

Bibliography. 19, 52, 57, S.

GENERAL HOUSES

TYPE Panel
SPONSOR General Houses, Incorporated
COUNTRY United States
DATE-1932

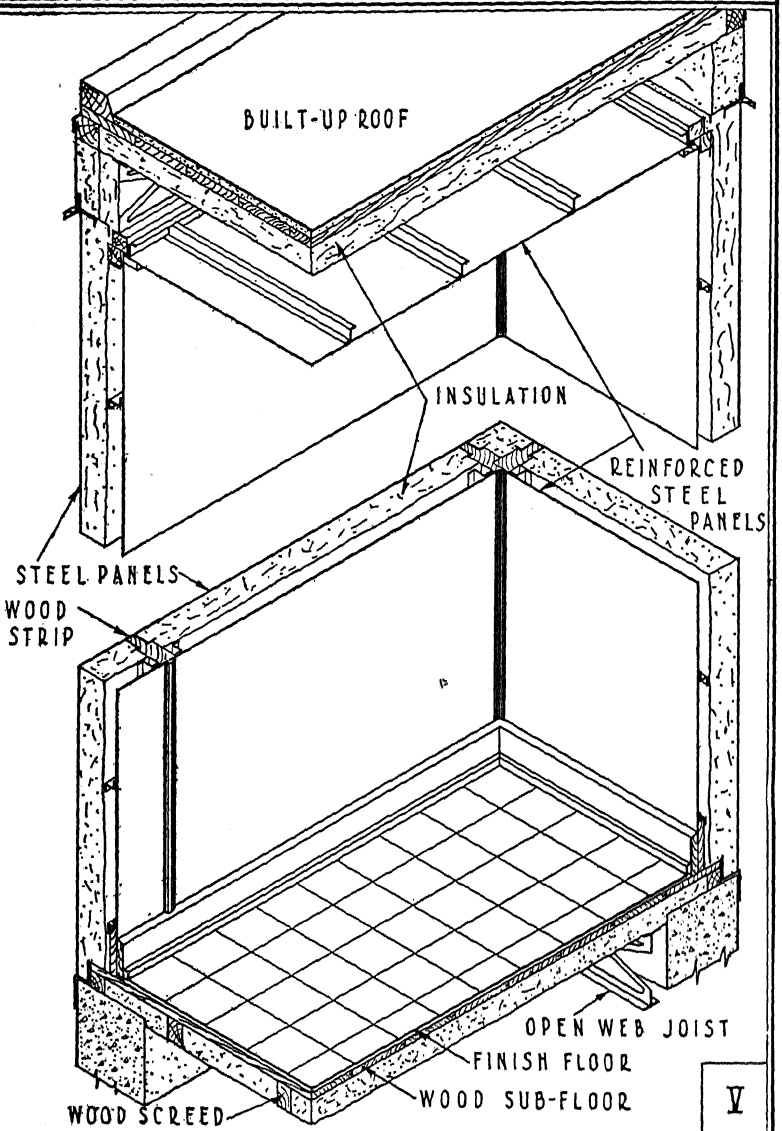

V

General Houses

Type V. PANEL

Sponsor: General Houses, Inc.

History. General Houses, Incorporated, Chicago, Illinois, Howard T. Fisher, President, was first brought widely to the attention of the American public in the magazine *Fortune* for July, 1932. At that time *Fortune* was just completing a series of articles on what was wrong with American housing, and the General Houses approach was presented as a solution of the problem. Subsequently a number of houses were built for individuals as well as two for the Century of Progress exhibition in successive years. Since then the corporation has steadily continued in the field and, although no great number of houses have been built, the geographical distribution is adequate. Details have changed somewhat since the first disclosures of the proposed method of construction, but in essentials there has been little alteration. In some of the houses constructed there has been some deviation from published details (for example, in the house at Elmhurst, Illinois). The details here shown are based on the latest publications of the corporation. As this book goes to press, it is reported that General Houses is designing a group of houses for Sears, Roebuck and Company.

Structure. (See Telford.) A concrete foundation supports inner and outer panels of steel, separated from each other and also from adjacent panels at the vertical joints by vertical strips of wood. Later published details are not clear, but it is assumed that the designer has not departed from his original idea of bolting adjacent panels to each other through their flanges at intervals along the vertical joint and inserting the insulation afterwards. The original bolts were of the wedge type, but it is believed that they are now more positive. The floor system is of open-truss joists with wood screeds, wood under-floor, and any desired top floor. Steel panels form the ceiling and are suspended from the open bar joists. Insulation is added where needed. The roof covering is of

the built-up type. Steel apparently forms the exterior and interior wall finish.

Comment. That the present details of General Houses construction are not quite so clear as heretofore is probably due to an entirely defensible corporate policy of focussing attention on the complete house rather than on individual details of structure. The program of General Houses extends far beyond mere alteration of structural design. It contemplates inter-corporate cooperation, and financing, designing, and sales departments — dealer outlets comparable to those in the motor industry and local service units associated with the local dealers. The individual parts are all said to be " susceptible to industrial mass-production but . . . so designed as to permit assembly in an unlimited variety of house designs." The system includes a pre-fabricated chimney breast and fireplace, windows, doors, stairs, and a parapet rail. The emphasis so far has been on the flat-roofed house with at least a portion of that roof adapted for play space, in the tradition of the International Style. A large and elaborate catalogue is available to the potential purchaser and the corporation is ready to quote definite prices on definite articles. Aiming less at pre-fabrication *per se* than at actually producing a factory-made, or rather corporate-made, house at a definite price, General Houses has unquestionably made more progress and received more publicity than most of the sponsors, who have confined themselves entirely to a study of structure. Portions of the system of construction are patented. The house is dry, insulated, and attractive.

Bibliography. 5, 10, 12, 25, 28.

Gropius

Type IVa. METAL FRAME — SKYSCRAPER

Sponsor: Walter Gropius, Architect

History. Gropius is one of the best known German architects; indeed, his fame is international. As founder of the Bauhaus at Dessau, Germany, he has long been in the van of progressive-minded architects. He has designed and supervised the building of numerous small houses in Germany, involving various experiments in plan, in materials, and in structure. The construction shown here was used in a building designed and built for the Stuttgart Exposition of 1930, and is described by Gropius in *The Architectural Forum* for March, 1931.

Structure. This house was built by the so-called dry process, no moisture being used on the job after the concrete foundation was poured. On that foundation was erected a steel frame employing channels for sills and girts, I-beams for floor framing, and Z-bars for studding. The latter were spaced on 3′–6″ centerings and that centering served as a module. The curtain walls were built of 3″ pressed-cork sheets covered with asbestos board. The face of these sheets was set back from the covering plate of steel used on the exterior. Floors were of wood planks and ceilings of fiberboard furred away from the bottom flanges of the I-beams. In addition to insulation, the roof had pre-cast cinder-concrete forms covered with cinder concrete and metal.

Comment. This house is fully as important for its exposition of Gropius' theories as to what the house of the present should be as it is for the structural novelties involved. Some of these ideas, expressed by Gropius in various speeches and articles, are:

(a) Houses must supply ample sunlight, fresh air, and facilities for outdoor exercise. The one-family house meets these requirements better than the upper floors of a crowded tenement, but in urban work " the decisive criterion is the highest attainable degree of usefulness for townspeople " as a whole, and may best be met perhaps by apartment groups of many stories.

GROPIUS

TYPE Metal Frame-Skyscraper
SPONSOR Walter Gropius
COUNTRY Germany
DATE - 1930

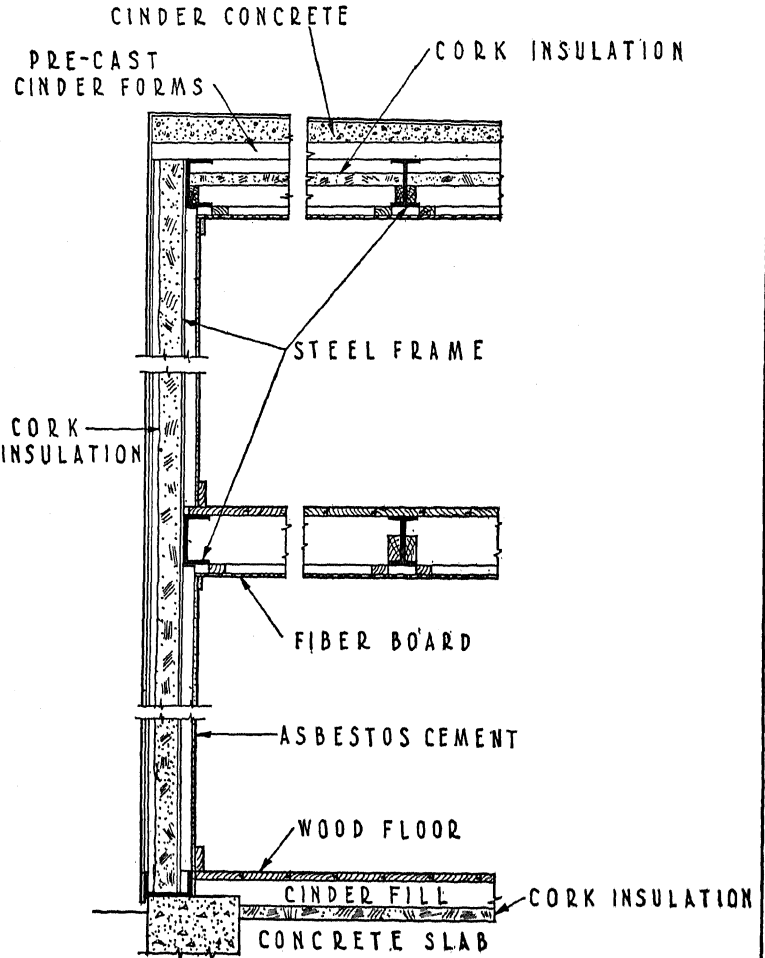

IVa

(b) The dwelling house should no longer look like a fort or a monument. Its walls should be of light construction and many-windowed, and it should aim at "a 'beautiful' life at home — at the least possible cost of space, material, and building expense."

(c) Therefore the beauty of a modern house consists of opened walls, light structure expressive of buoyancy, clearly defined simple forms, harmonized proportions of all building parts, complete satisfaction of every material and psychic requirement.

(d) This indicates that the functions of enclosing walls should be differentiated — the load shifted from the entire wall to a skeleton structure, with the use of thinner building units of high-grade material, continuous window sheet, and the flat roof to provide:

(1) clear rectangular rooms in the attic instead of useless dead angles
(2) utilizable roof space
(3) elimination of the fire risk in wooden framework and trusses
(4) no areas of resistance to wind
(5) re-creation of garden spaces, visible from the modern air routes (the area of green ground lost by erection of buildings being regained on the tops of the flat roofs)

(e) Increased standardization is indicated, with its tremendous savings and actual stimulation rather than obstruction to esthetic progress.

Bibliography. 1, 45.

HAHN

TYPE Concrete Formed in Situ and Pre-cast Unit
SPONSOR Hahn Concrete Lumber System
COUNTRY United States
DATE-1915-20

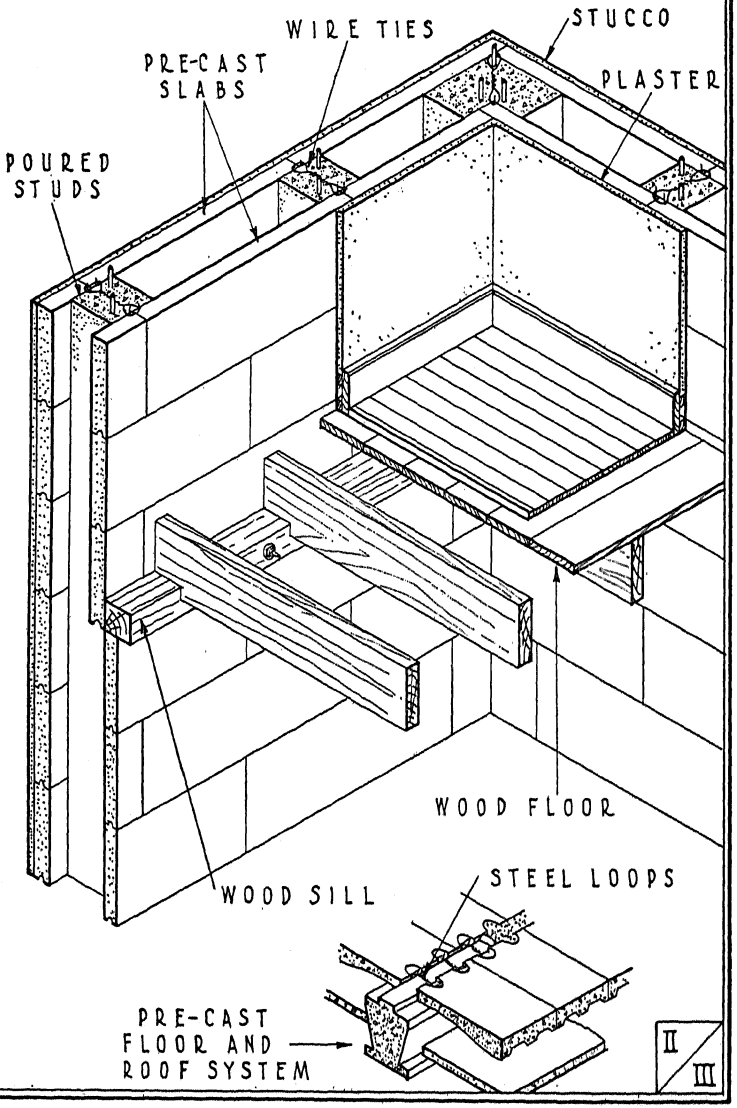

Hahn

Type II–III. Concrete Formed in Situ; and Pre-cast Unit

Sponsor: Hahn Concrete Lumber System

History. A number of houses and other small structures have been built by this system in Illinois and Wisconsin. According to estimate from the Portland Cement Association, first use was about 1919. It may safely be placed in the period 1915–1920.

Structure. Pre-cast concrete slabs, 12″ high, 30″ long, and 2″ thick, are erected in two rows, staggered between courses to break the vertical joints. Slabs in opposite rows are tied together by wire fastened around projecting wire loops in the slabs. Reinforced-concrete columns are constructed at corners and every 30″ along the wall, located so as to embed the wire cross ties. The studs are poured in the rectangular space formed by the slabs on two sides and by collapsible wood forms on the other two sides. The slabs are pre-molded on wood pallets, the concrete being compacted by hand and struck off.

The floor system consists of a pre-cast beam and pre-cast slabs for ceiling and under-floor. If preferred, ordinary wood-joist construction may be used.

The exterior wall finish is stucco, with joints mortared. The interior is plastered directly on the slabs.

Comment. The Portland Cement Association suggests that the insulation would be improved by using lightweight concrete for the interior slabs. Provided that pre-cast lightweight concrete slabs are satisfactory and economical, this suggestion would seem to apply to all systems using pre-cast wall slabs in two rows, as recognized in England (see British Systems). The importance of bond beams at floor and roof levels to tie the structure together is also emphasized.

Bibliography. 50.

HODGSON

TYPE Panel
SPONSOR E. F. Hodgson Company
COUNTRY United States
DATE - 1892

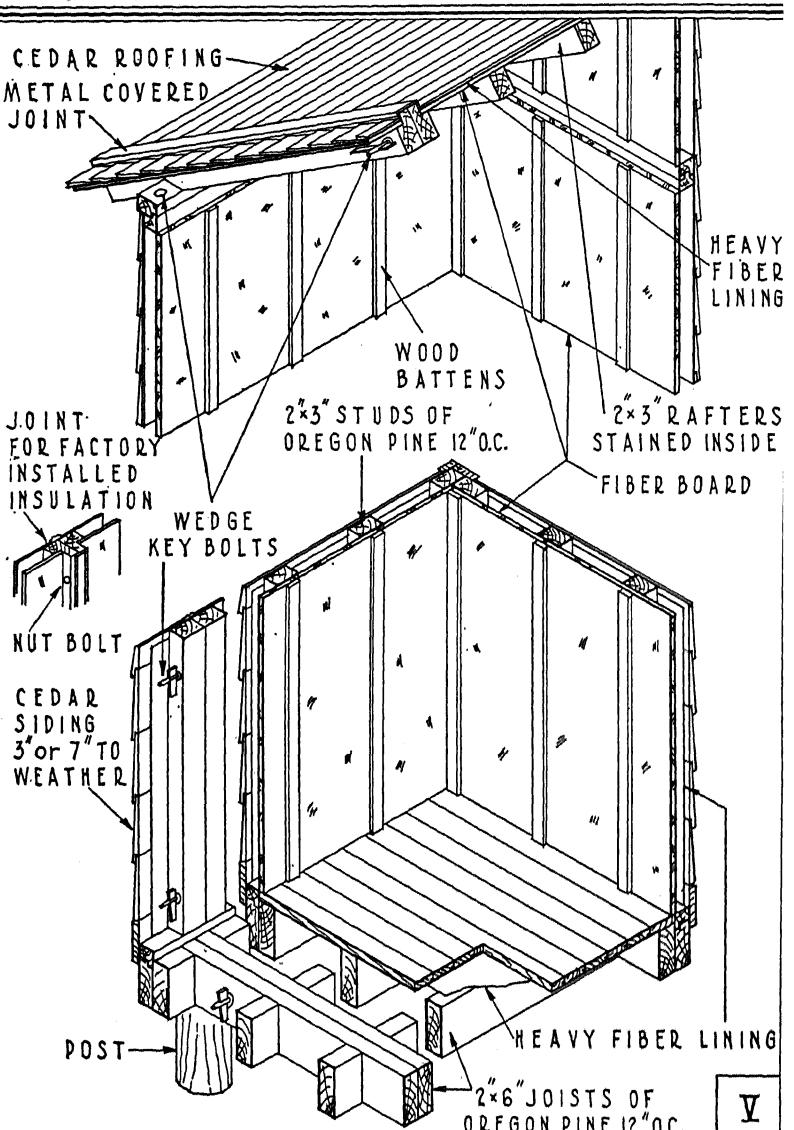

V

Hodgson

Type V. PANEL

Sponsor: E. F. Hodgson Company

History. Hodgson Portable Houses are a well known commercial product, particularly in New England and in New York State. These houses have been in continuous and apparently successful production since 1892. In this respect the product is unique in the pre-fabricated-house industry. The enterprise is a notable instance of commercial development on a conservative basis. No attempt has been made to rush into large-scale production nor to solve all the problems of house construction at the start. So far, the houses compete in only a limited portion of the housing field, being restricted to one-story structures of modest proportions.

Structure. The conventional wood-frame construction is modified to permit shop fabrication in sections. The sections are usually 6′–0″ long, each consisting of five separate parts, two side wall panels, two roof panels, and one floor panel, which are bolted together on the site. The roof panels are of two sizes, to give a room width of either 12′–0″ or 18′–0″. In addition there are end units, roof-dormer, and ell units. The wall and end units may include a variety of windows or doors. Partitions are panels of matched boarding.

Wall panels are framed on 2″ x 3″ studs on 12″ centers, the studs turned with the 3″ dimension parallel to the wall. Outside of the studs is a special heavy fiber lining and a board siding, specially rabbeted so as to lie flat against the fiber lining. Inside the studs is 1″ of fiberboard insulation, secured by wood battens nailed over each stud. Roof units are similar, with cedar roofing to replace the siding. Floor units consist of 2″ x 6″ wood joists, on 12″ centers, covered with the fiber lining and matched-board flooring.

Sections are fastened together by wedge bolts which pass through the marginal wood framing. Two types of joints are offered. One, with ordinary marginal framing pieces, requires the fiberboard to be applied after erection. The other provides deeper

framing at the margins with rabbeting to take the insulation board in the shop. The border flanges are long enough to take the wedge-bolt connections and are faced inside with a thin batten. The outside joints are covered with a wood molding.

Sections come from the factory painted, although a finish coat may be applied after erection if desired. Interior finish may also be added as desired, although the standard product includes an adequate minimum.

Comment. Any system of pre-fabricating wood has to contend with the effects of moisture. The Hodgson Company meets this problem by insisting on materials of highest quality.

It is difficult to judge what the ultimate reduction in cost of Hodgson Houses might be from large-scale production.

Bibliography. S.

INGERSOLL

TYPE Concrete Formed in Situ
SPONSOR C. H. Ingersoll
COUNTRY United States
DATE - 1915-20

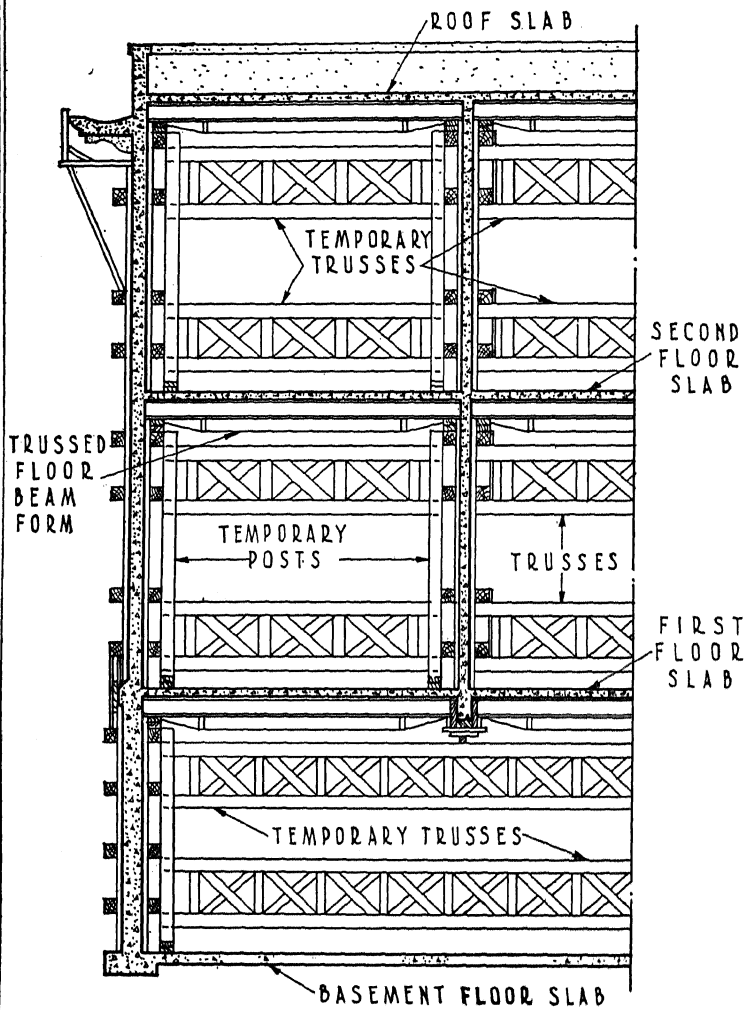

II

Ingersoll

Type II. Concrete Formed in Situ

Sponsor: C. H. Ingersoll

History. This type of monolithic house construction was developed primarily for large industrial housing projects. Two such developments in New Jersey (1918–1919) included a total of 115 four- and six-room Ingersoll houses. Others have been built in that vicinity.

Structure. The walls are solid reinforced concrete. Floors and roof are of beam and slab type. The roof is waterproofed with hot asphalt. Outside wall finish is a brush coat of stucco.

Heavy wood forms are used, consisting of 6″ x 6″ vertical posts, heavy wood trusses, beam and girder forms, and wall- and floor-panel forms of 2″ stock lined with ⅞″ lumber. Vertical posts are of story height. These are first set on the basement floor. The heavy wood trusses are then connected to the posts, forming a rigid skeleton frame on which the wall panels are supported. The beam and girder forms are blocked up from the trusses and support the floor-slab forms.

For interior finish, ceilings are plastered on the concrete. Plaster is furred out from the outside walls but is applied direct to the partition walls. Wood finish floors are laid on wood sleepers.

Comment. The Ingersoll system is very close to the theory advanced by Thomas A. Edison on house construction. No variation is permitted between houses cast in one set of molds, the object being to minimize overhead cost for forms and to secure the greatest possible economies from continuous and repetitive operations.

The cost of the finished houses, exclusive of land, has been under $2,000 for four-room houses and under $2,500 for six-room houses. In all cases the houses have been very small, designed for workers of the semi-skilled or unskilled group.

Bibliography. 50.

KENT

TYPE Pre-cast Unit
SPONSOR Colonel H. Vaughan Kent
COUNTRY England
DATE-1920-25

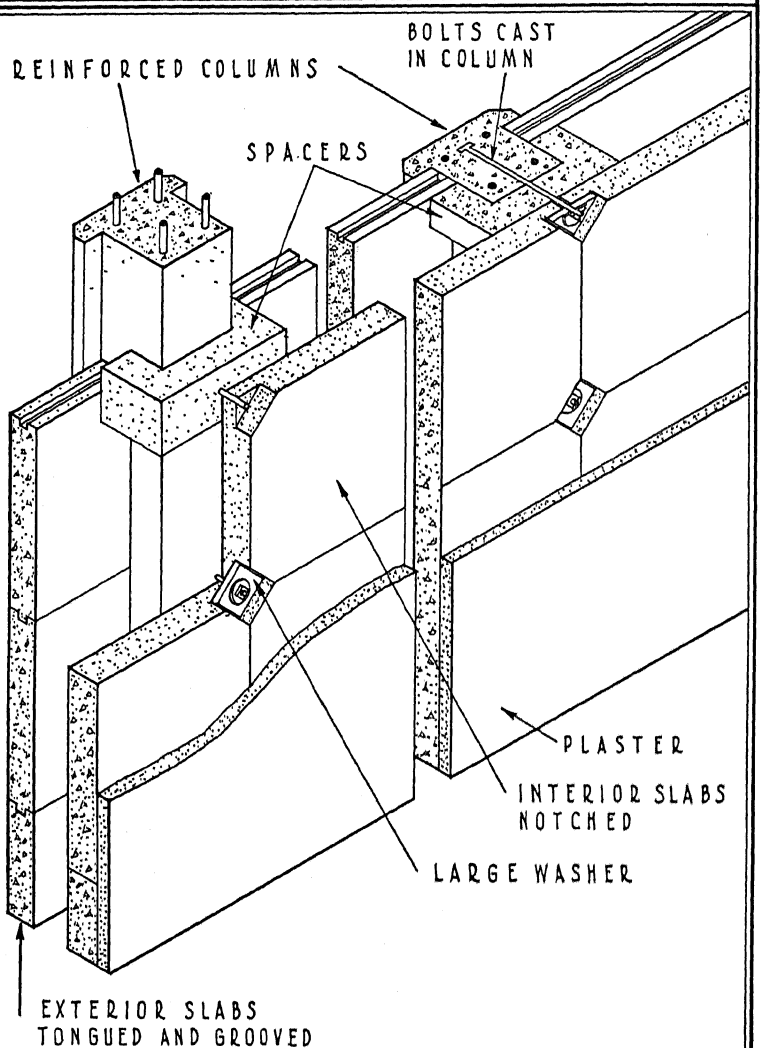

III

Kent

Type III. Pre-cast Unit

Sponsor: Colonel H. Vaughan Kent

History. The Kent System of Rapid House Construction is one of the most interesting, though perhaps not one of the most widely used, of the " alternate " systems involving concrete proposed in England during the post-War housing shortage. It was one of many approved by the Ministry of Health for subsidy houses. At Marlow two full-sized subsidy houses were constructed by the method, for the Right Honourable Lord Terrington, and these were followed by others. Like almost all the other methods of " alternate " construction in England, the system has languished with the diminution of government subsidies. (See British Systems.)

Structure. The system was one of pre-fabricated concrete slabs coupled with pre-cast reinforced columns and bolt connectors. The columns of the cross-section shown had the cross-wall connecting bolts cast in them during manufacture. They fitted into intermittent pre-cast grooved blocks which separated outer and inner courses of pre-cast concrete slabs. The exterior slabs were tongued and grooved to interfit. The inner slabs (of lightweight cinder concrete) were notched at the corners to receive a large square washer, over which the bolthead was applied and turned up tight. The inner wall was plastered to a thickness of ¾", thus covering the boltheads. The outer slabs and columns were sometimes stuccoed, but the sponsor stated that this was unnecessary except to cover the batten-like projection of the reinforced columns. Floors and roofs were apparently conventional.

Comment. None.

Bibliography. 54.

KNIPE

TYPE Concrete Formed in Situ
SPONSOR Insulated Concrete System, Limited
COUNTRY United States
DATE-1925-30

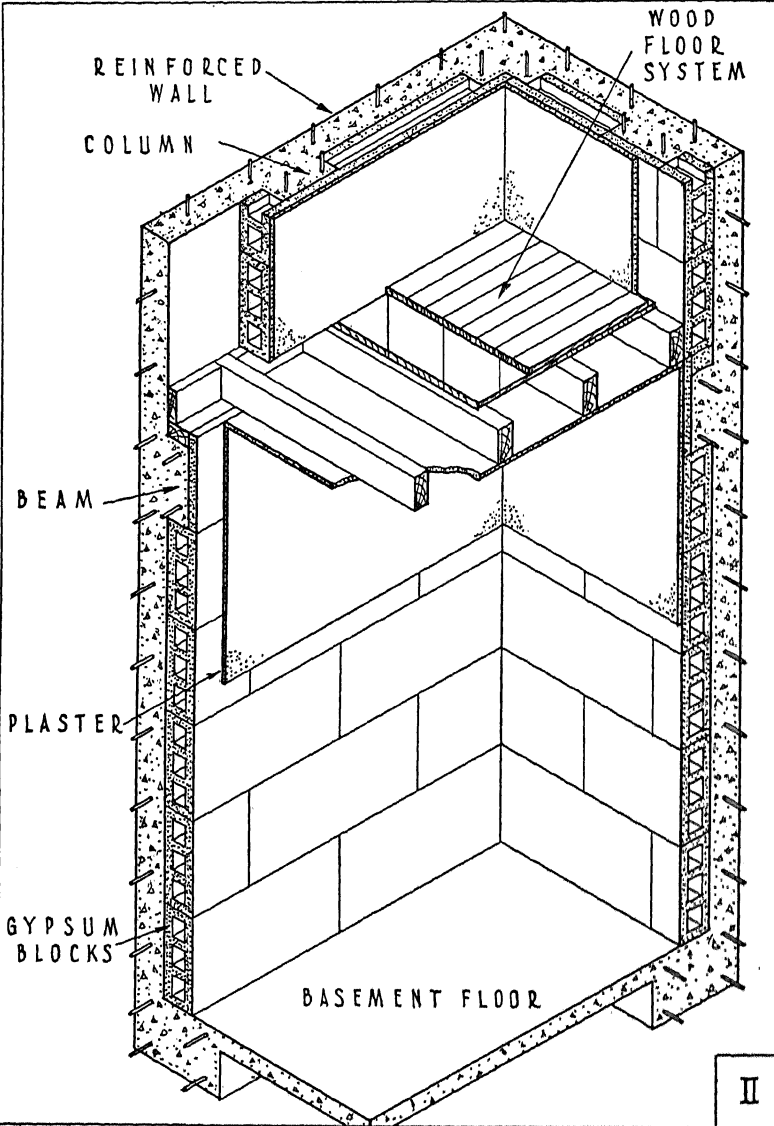

II

Knipe

Type II. Concrete Formed in Situ

Sponsor: L. G. Knipe — Insulated Concrete System, Ltd.

History. This system of monolithic walls has been used for about 50 houses erected in California. The Portland Cement Association estimates first use to have been about 1925. It may safely be placed in the period 1925–1930.

Structure. Gypsum blocks 4″ x 12″ x 24″ are laid in two courses against open form frames erected on the inside wall line. The wall reinforcement is set and the outside form panels are raised level with the gypsum units, are wired, and spaced. The concrete is poured between the outer forms and the blocks. The gypsum blocks may be cut to allow for widened concrete sections, chases, and the like. Floors may be of any type.

The exterior is painted or stuccoed. Inside plaster is applied on the gypsum blocks.

Comment. This system relates only to structural walls, including some heat insulation.

Bibliography. 50.

LAKEOLITH

TYPE Pre-cast Unit
SPONSOR Simon Lake and Connecticut Lakeolith Corp.
COUNTRY United States DATE-1918

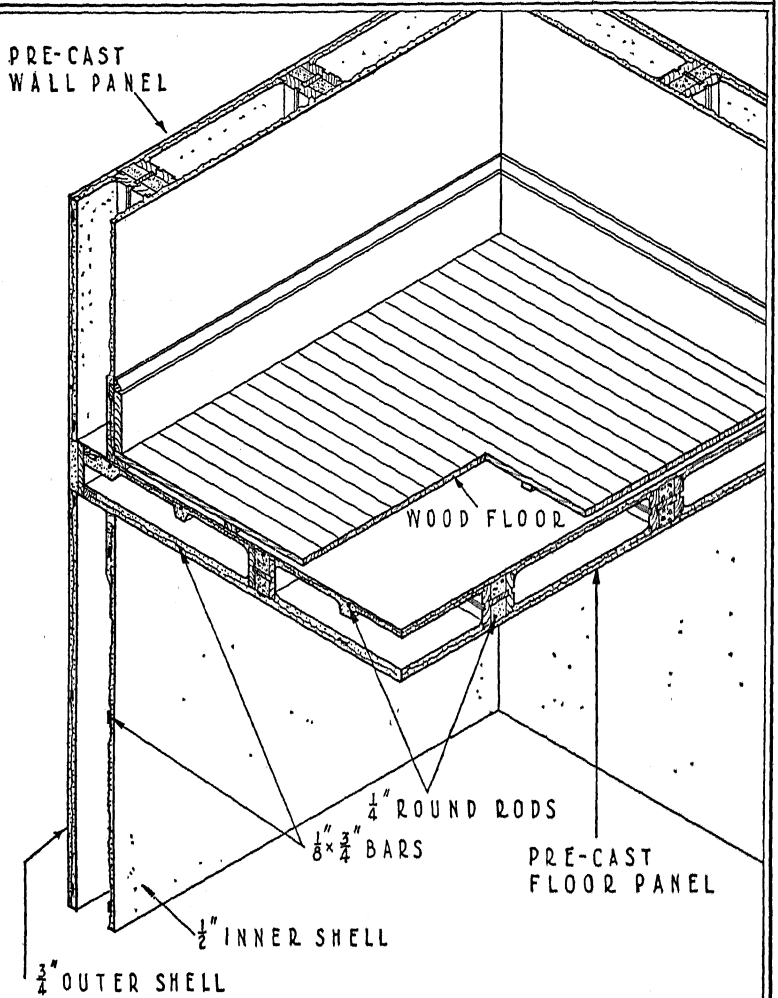

Lakeolith

Type III. Pre-cast Unit

Sponsors: Simon Lake and Connecticut Lakeolith Corporation

History. The well known inventor, Simon Lake, of submarine fame, spent many years and a considerable amount of money developing the Lakeolith type of pre-cast concrete construction. The first experimental house was built in 1918. Active experimental work continued for many years, including the erection of a number of houses.

Lake aimed to develop a housing construction suitable for large-scale production that would have the advantages of low cost, rapid erection, dry construction, permanence, and adequate heat insulation, and that would be fireproof. The construction was claimed to be adapted also to large apartment houses and even to skyscrapers.

Structure. Large wall and floor sections or units were pre-cast at the factory, delivered to the site by special trucks or flat cars, and hoisted into position by derricks. Wall and floor units were 5″ thick, weighing about 60 pounds per square foot. Sizes were based on a 2′–0″ module running up to a maximum of 10′–0″ x 30′–0″.

The units were cast horizontally as cored hollow walls, with wire-mesh reinforcing in each surface and ¼″ round steel rods for reinforcing in the cross ribs. The ribs were poured between two parallel wood planks, which remained in the finished unit. The ribs were divided in half by a transverse wood board that fitted into grooves cut in the parallel planks. The purpose of this wood was to provide heat insulation by breaking the solid concrete connection between the inner and outer wall surfaces. The two portions of the ribs were tied together structurally by transverse steel reinforcing rods that pierced the wood separators.

The edges of the floor units were passed through the outer walls so that wall units, both for load-bearing walls and for interior partitions, rested on a platform at a single level. The wall

units included windows and doors, completely finished at the factory.

Floors were usually of wood, and the inner surface of the wall units was tinted and treated by a special process.

Comment. The Lakeolith system included an accelerated curing of the poured concrete by subjecting it to steam, which, it was claimed, removed most of the free moisture in about forty-eight hours. Special finishes were developed for the inner and outer surfaces of the wall units.

Bibliography. 55, S.

Lindeberg

Type V. PANEL

Sponsor: Harrie T. Lindeberg

History. In *The Architectural Record* for October, 1933, Harrie T. Lindeberg, a distinguished American designer of houses, proposed his cellular-steel unit construction, which he had worked out in collaboration with F. H. Frankland as consulting engineer and which bore the stamp of the American Institute of Steel Construction. In the *Record* symposium of January, 1934, this construction was again illustrated. Lindeberg proposed much besides a system of construction, particularly the application of a module to house design, and supplied a large number of excellent pen-and-ink renderings. These demonstrate that it is possible to apply a module to many of the most famous residential works of the past, and that it is possible today to create a wide diversity of elevations and plans within the limitations of a module and his proposed construction.

This cellular-steel wall construction has been used in several houses in California. The floor construction was used in the Gallinger Hospital in Washington, D. C., built in January, 1935. Both the floor and wall constructions were used by Lindeberg in a small house built in Virginia early in 1935.

Structure. (See Palmer.) As the fundamental unit of his system, employed in walls, floors, and roofs, Lindeberg suggests the use of the Robertson FK-Type Keystone unit, the cross-section of which is shown in the drawing. It is of the order of 18″ to 24″ in width and 5″ in depth, consisting of a cellular-shaped steel sheet with a flat plate welded to one surface.

A concrete foundation is formed in the customary manner. A steel base plate is anchor-bolted to this foundation and grouted to level. The first floor is made up of the cellular units with the sheet-steel plate on top for subfloor, and finished with insulation and composition flooring. This inverted unit is called FKX by the Robertson Company.

LINDEBERG

TYPE Panel
SPONSOR Harrie T. Lindeberg
COUNTRY United States
DATE - 1933

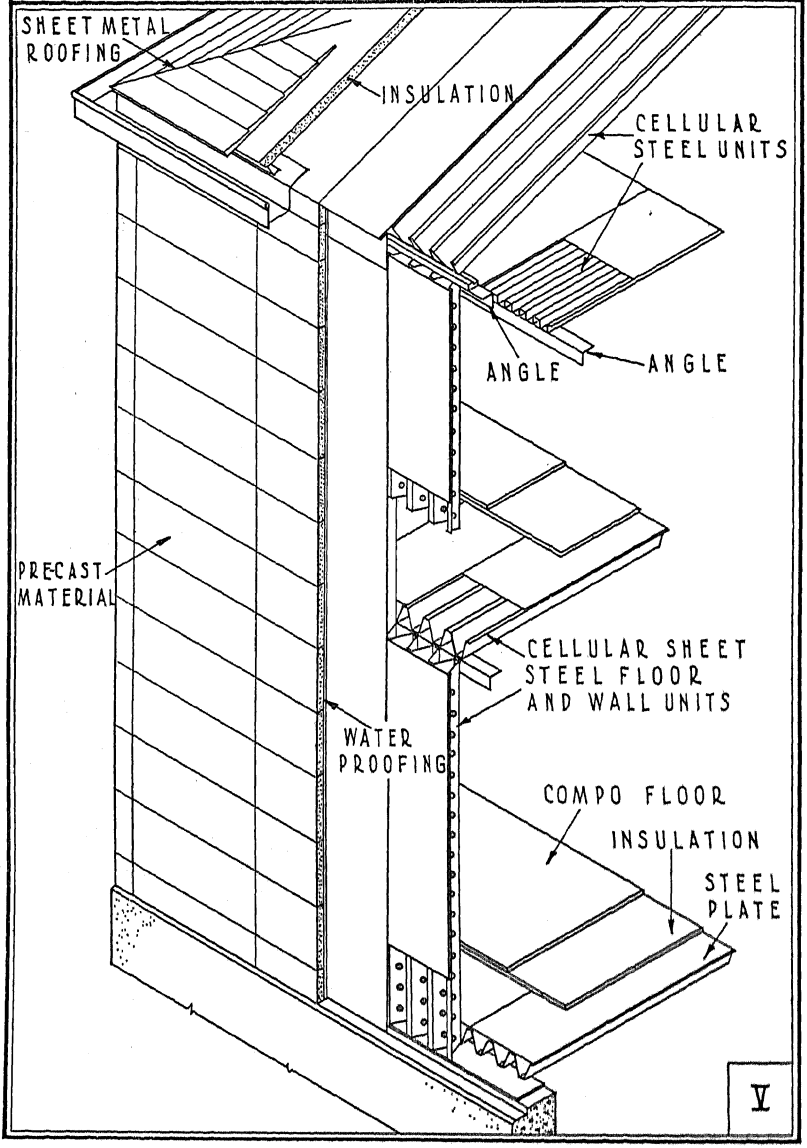

V

Wall units of the same section extend the height of the building and are field-welded to the base plate. A special corner unit is also of steel. The exterior is finished with the steel plate of the cellular units, waterproofing, and an undefined pre-cast material. The vertical joints of the steel plate are welded in the field. The wedge-shaped spaces in either floor or wall units accommodate piping and insulation, and after the proper installations have been made the inner wedges are filled with insulation applied with a gun. The wall is finished with insulation and wallboard.

The floor units of the upper floors are supported by shelf angles, which are welded to the inner faces of the wall units and on which the floor units rest. Flooring is the same as on the first floor. The ceiling is finished with pre-cast acoustical ceiling board, the joints covered by metal strips.

The inclined roof construction is similar to that of the floor except that the roofing itself is of insulation covered with sheet metal.

Comment. So far, all houses of this type of construction have been built in moderate climates where heating and condensation conditions are less severe than in New England or the North Central States.

Bibliography. 28.

LOCKWOOD

TYPE Pre-cast Unit
SPONSOR Ernest H. Lockwood
COUNTRY United States
DATE-1930-35

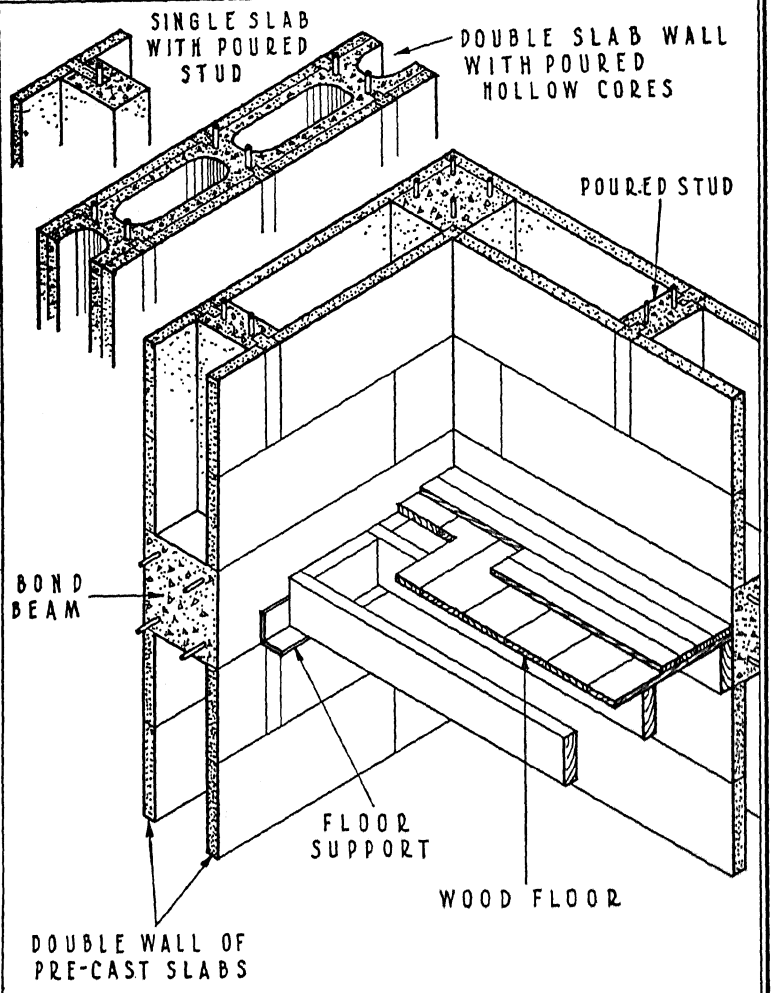

III

Lockwood

Type III. Pre-cast Unit

Sponsor: Ernest H. Lockwood

History. A number of houses have been erected in Pasadena by this system of construction and slab manufacture. The Portland Cement Association estimates first use to have been about 1930. It may safely be placed in the period 1930–1935.

Structure. Pre-cast slabs, 1½″ x 12″ x 36″, are used in the wall construction, either in a single row with poured studs, or in two rows with a poured hollow wall or poured studs. Slabs are reinforced with a bar along each longitudinal edge, bent near the end so as to protrude from the edge and key with a corresponding slot in the slab above. Flat metal ties placed at all slab junctions hold opposite sides in alignment. Metal cores or stud forms are spaced within the slabs, and concrete poured. For single-faced walls, metal stud forms held against the slabs by ties inserted in the joints are filled with concrete. Bond beams and corner columns are formed and poured.

For exterior finish, joints are pointed and, as the slabs are attractively finished in the mold, they need no further treatment. Floor construction and interior finish may be conventional.

A special feature is a patented machine for casting the wall slabs on the job. The machine is operated on wheels running on the parallel edges of the slab forms, which provide a light metal track. Cross braces between the tracks divide the slabs into lengths. The machine hopper is filled from a concrete mixer located at one end of the track and the machine is moved by a cable and winch. As it moves, concrete is discharged downward into the forms, leveled, colored if desired, and covered with waterproof paper. Another layer of forms is set on the first track and the process repeated. The slabs have sharp, true edges, and an attractive surface texture results from the slight wrinkling of the paper covering.

Comment. This construction is reported by the Portland Cement Association to be well suited to small residences.

Bibliography. 50.

LOW-COST FARMHOUSE

TYPE Panel
SPONSOR Kocher and Frey
COUNTRY United States
DATE - 1934

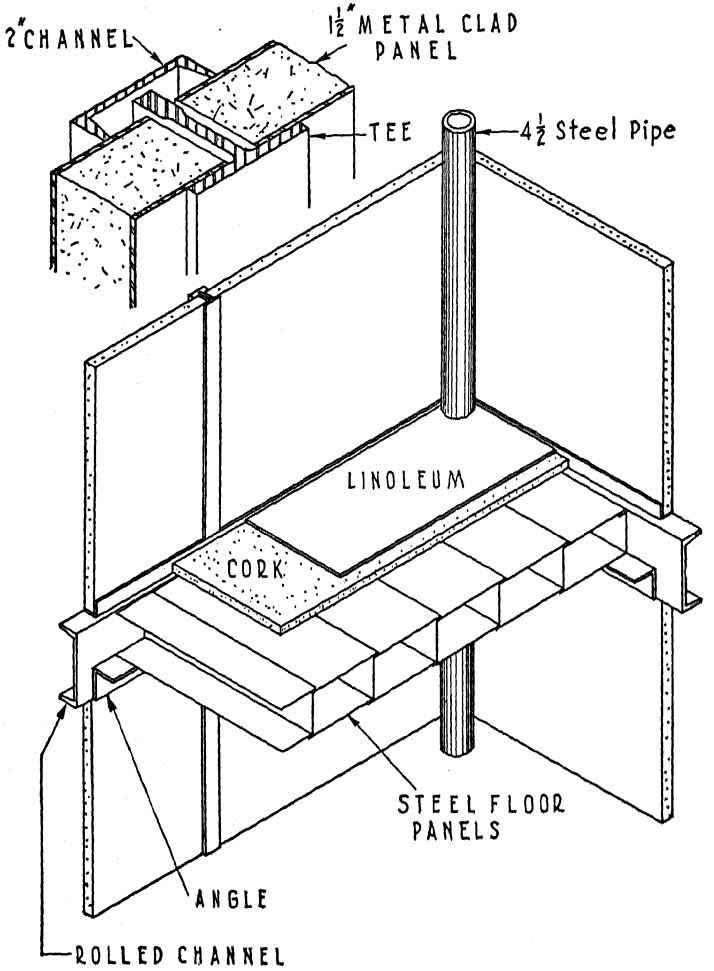

Low-Cost Farmhouse

Type V. PANEL

Sponsor: A. Lawrence Kocher and Albert Frey

History. Kocher and Frey, well known New York architects, publicists, and editors, are responsible for many recent fruitful suggestions in the field of low-cost housing. (See Aluminaire.) The Low-cost Farmhouse here presented was described in *The Architectural Record* for January, 1934 (Kocher is managing editor and Frey a contributing editor of this magazine). The study was made at the request of the Committee on Farmhouse Design of the President's Conference on Home Building and Home Ownership. The purpose was to demonstrate the possibility of using standard and available building materials, with fireproof qualities, in the construction of a house for rural communities.

Structure. The house is supported structurally by corner columns of 4½″ steel pipes set on foundation piles and extending the full height of the building. On the outside of these, at second-floor and roof levels, is provided a girt of 10″ steel channels, the backs of which face in. An angle welded to the back of the channels provides a ledge for the floor system to rest upon. The floor as originally proposed was framed with bar joists, which in turn supported a thin battledeck type of steel flooring covered with cork and linoleum. Subsequently, the 16-gauge Armco steel floor panels shown in the drawing were substituted. (See Armco.)

The columns are entirely within the panel structure which forms the curtain wall. These panels are 1½″ thick, of insulating board covered with thin-gauge steel. Units are held in place by a combination of steel Tee, channel, and screw. Steel surfaces are painted, both outside and inside, for finish. The steel deck roof is covered with insulation board and built-up roofing. The first floor is of the concrete raft type. As far as possible, closets serve as partitions. All parts (metal-clad wallboard, doors, stairs, closets) are 3′–0″ units, and rooms are multiples of 3′–0″ — the standard width for materials.

Comment. The system is remarkably simple and lends itself to an unusually high degree of standardization and pre-fabrication. The sponsors' claim that its insulation is superior to that of the average masonry wall appears warranted except at the girt level. Low cost is also claimed.

Bibliography. 28, S.

LURIE

TYPE Metal Frame-Skyscraper; Metal Frame-Close-spaced
SPONSOR Metal Lath Manufacturers' Assoc.
COUNTRY United States DATE-1935

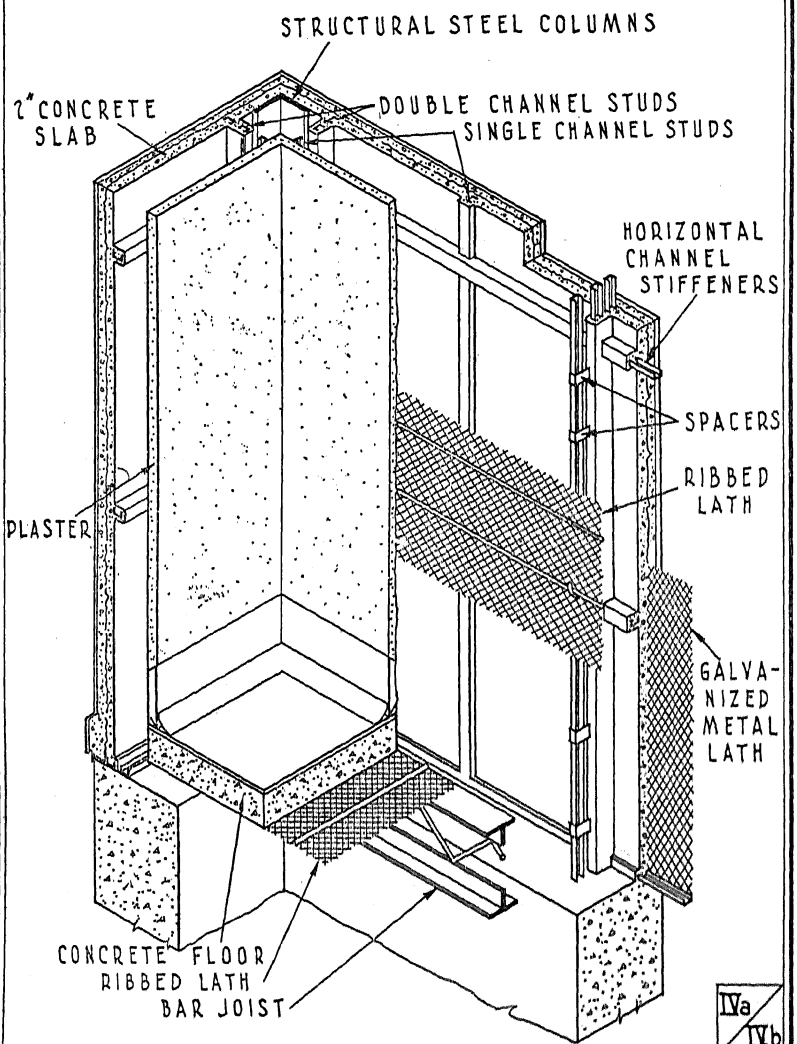

IVa IVb

Lurie

Type IVa–IVb. METAL FRAME — SKYSCRAPER; METAL FRAME — CLOSE-SPACED

Sponsor: Metal Lath Manufacturers' Association

History. In 1935, E. M. Lurie, Secretary of the Metal Lath Manufacturers' Association, presented this proposal for a house. It was published in various trade journals, particularly those of the plastering trades, and was quite frankly an effort to counteract the tendency in pre-fabrication to abandon plaster by offering a system that would employ a maximum of plaster and yet provide a strong, durable, and fireproof house.

Structure. The house chassis consists of a structural steel frame, the wall columns of which are angles or channels, single or in pairs, of relatively small thickness and spaced at about 12′ intervals. Corresponding angles or channels cap the columns at story levels. Small (¾″) horizontal steel furring channels are attached to these main vertical members near the outside of the wall at 32″ intervals. Vertical furring channels of the same size are attached to the outside flange of the horizontal channels at intervals not exceeding 16″. Opposite every second one of these a similar vertical channel is fastened to the inside flange of the horizontal channels so that the vertical members occur alternately as single or double studs along the wall. Metal lath is attached to the outside flanges of the vertical studs and is given a scratch coat of stucco. Spacers, extending inwardly, are fastened to the inner channel of the doubled-channel studs. The entire interior face of the lath, together with the channels, is then back-stuccoed to afford a thickness of about 2″ over all the steel. The spacers are then connected to a third set of vertical furring channels that support the interior surface of metal lath and plaster. Finish coats of stucco may be subsequently applied. Floors are of any suitable joist type, supported on the girt members; the floor is of concrete supported on metal lath, and the ceiling of metal lath and plaster.

Comment. None.

Bibliography. 68, S.

McKAY

TYPE Metal Frame-Skyscraper
SPONSOR McKay Engineering Company
COUNTRY United States
DATE-1930-35

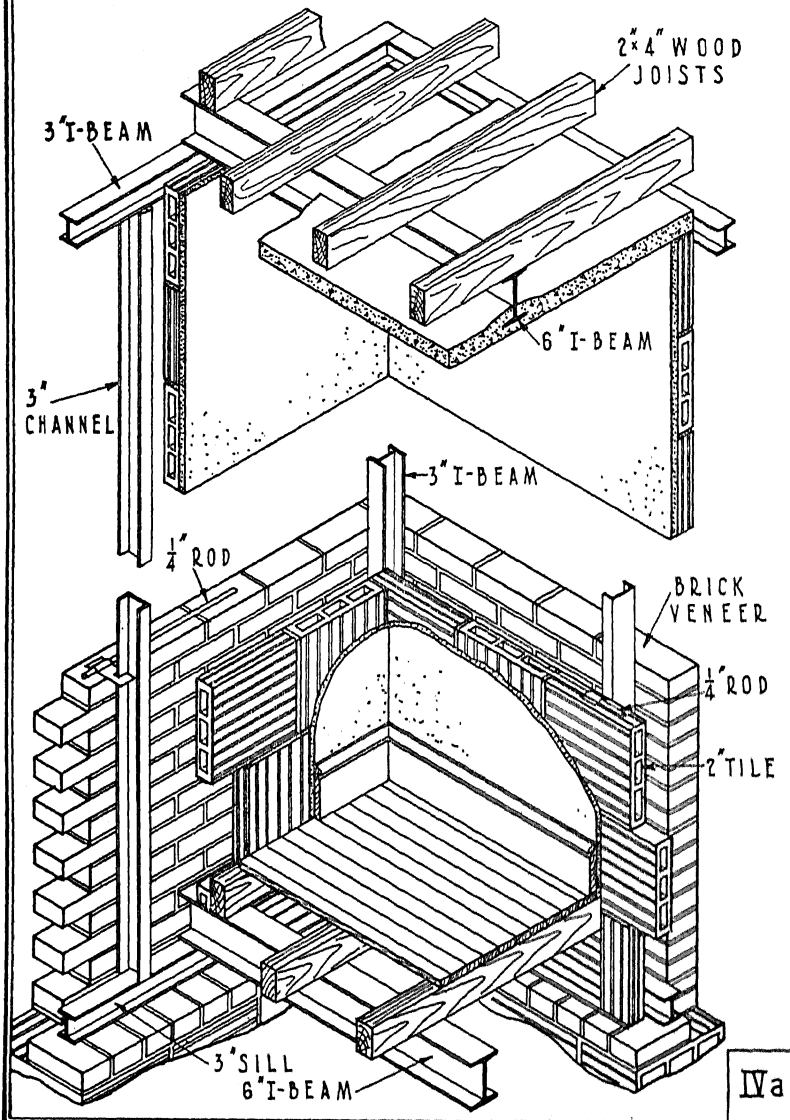

IVa

McKay

Type IVa. METAL FRAME — SKYSCRAPER

Sponsor: McKay Engineering Company, Cleveland, Ohio. House designed by George H. Burrows, Architect.

History. The construction presented here was used in the home of R. H. Schwarz of Cleveland, and is fully described in a publication of the Subsidiary Companies of the United States Steel Corporation, dated 1933.

The McKay Engineering Company reports that it has more than fifteen different systems of combining its direct bearing and interlocking steel framing with present building materials; that its program involves contacting the public through building-material manufacturers, and that it is ready to go ahead with this program. It states that during the last three years at least twelve homes and two other buildings have been constructed under the McKay system, but it is not evident whether this statement applies to the system pictured here or to one or more of the others.

Structure. The building is by no means a solution of the problem of pre-fabrication, and it is cited more as an example of good use of steel in construction than for its contribution to the art of cheaper building.

The frame was made up of standard structural steel sections with a usual spacing of about 4′–0″. These were furnished cut to length from warehouse stock and welded on the site. The floors were then built up as shown. Two inches of Haydite concrete served as fire protection and as a ceiling on the first floor only. Clay tiles 3″ thick were used on other ceilings. Two-inch ceramic tiles were used on the walls inside the frame and subsequently plastered, while the outside was 4″ brick veneer. Wood was used for framing of the roof and for sleepers and finished flooring. Insulation was apparently provided only by the dead-air space, but with this amount of masonry would appear to be adequate.

Comment. (See Steel-Bilt.) This is a first-class house in every way, well insulated, strong, fireproof, but probably correspond-

ingly expensive. All materials employed were previously well known, and they were not used in any unusual combination. Although there was a minimum of pre-fabrication in this building, it is thoroughly representative of the skyscraper type.

Bibliography. 41, 62.

Microporite

Type IVa. METAL FRAME — SKYSCRAPER

Sponsor: John B. Pierce Foundation

History. The John B. Pierce Foundation, set up under the will of the late John B. Pierce of The American Radiator and Standard Sanitary Corporation, has been for many years one of the leading investigators in the housing field. Until recently it has been the policy of the Foundation to do its work secretly and without publishing its findings. A departure from this policy led to publication of the details of the Microporite house in *The Architectural Record* for August, 1935.

Structure. The house is built around a new material, first produced in Germany, acquired and developed in the United States by the Pierce Foundation, and here called Microporite. Microporite is indurated calcium hydrosilicate; water-insoluble, neutral, highly resistant to acid and basic corrosion, and to fire and freezing. It weighs 28 pounds per cubic foot, with a compressive strength of 1000 pounds per square inch and a tensile strength of 100, a modulus of rupture (unreinforced) of 200 pounds per square inch, low heat capacity, and thermal conductivity of 0.70. The material has about 80 per cent voids, but these are sub-microscopic. Covered with a dense, cheap fibro-cement known as Morbelli, which is mechanically and chemically bonded to its facing, the material is said to be practically non-permeable.

For exterior structural wall purposes Microporite slabs are formed in sizes 12′–6″ x 2′–6″ x 4″. These slabs are placed horizontally and bolted to a frame of steel columns on 13′ centers. The joints are filled with what is said to be a permanently elastic expansion material in strip form. All joints are exposed and there are no batten strips or moldings.

Microporite floor and roof slabs are hollow, of the same length and width as wall slabs, and 10″ thick, supported at either end by the exterior wall and a central steel girder. Microporite is also used for interior surfaces. For partitions, non-bearing panels 8′–0″ x 2′–6″ x 2″ are held in place by floor and ceiling moldings.

MICROPORITE HOUSE

TYPE Metal Frame-Skyscraper
SPONSOR John B. Pierce Foundation
COUNTRY United States
DATE-1935

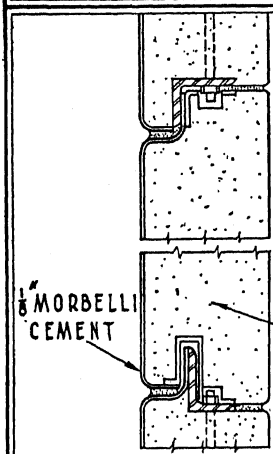

VERT. WALL SECT.

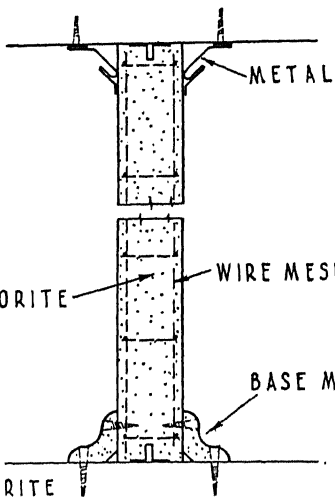

PARTITION SECT.

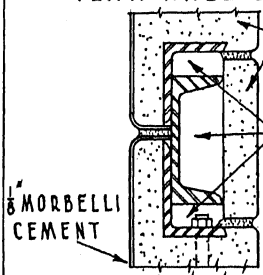

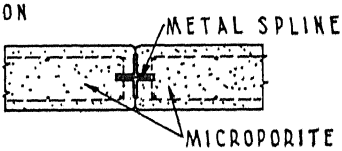

PARTITION JOINT

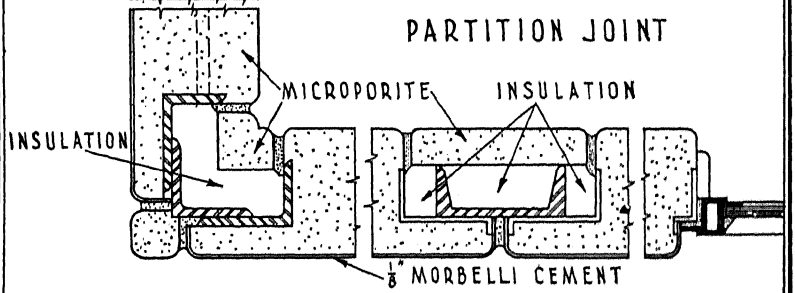

HORIZONTAL WALL SECT.

IVa

Microporite can be made in a variety of colors besides its natural white, and can be painted or papered; or, since the interior surfaces are chemically hardened, it can serve as the final finish. All such finishes are factory-applied.

Comment. Aside from the novelty and the interesting properties of the new material employed, this system is unusual in that it is one of the very few efforts to use units horizontally rather than vertically. Although the units of non-bearing partitions are vertically disposed, those of the main walls are entirely horizontal in treatment.

Bibliography. 67, S.

MINIMAL

TYPE Metal Frame-Skyscraper
SPONSOR Le Corbusier and Jeanneret
COUNTRY France
DATE-1925-30

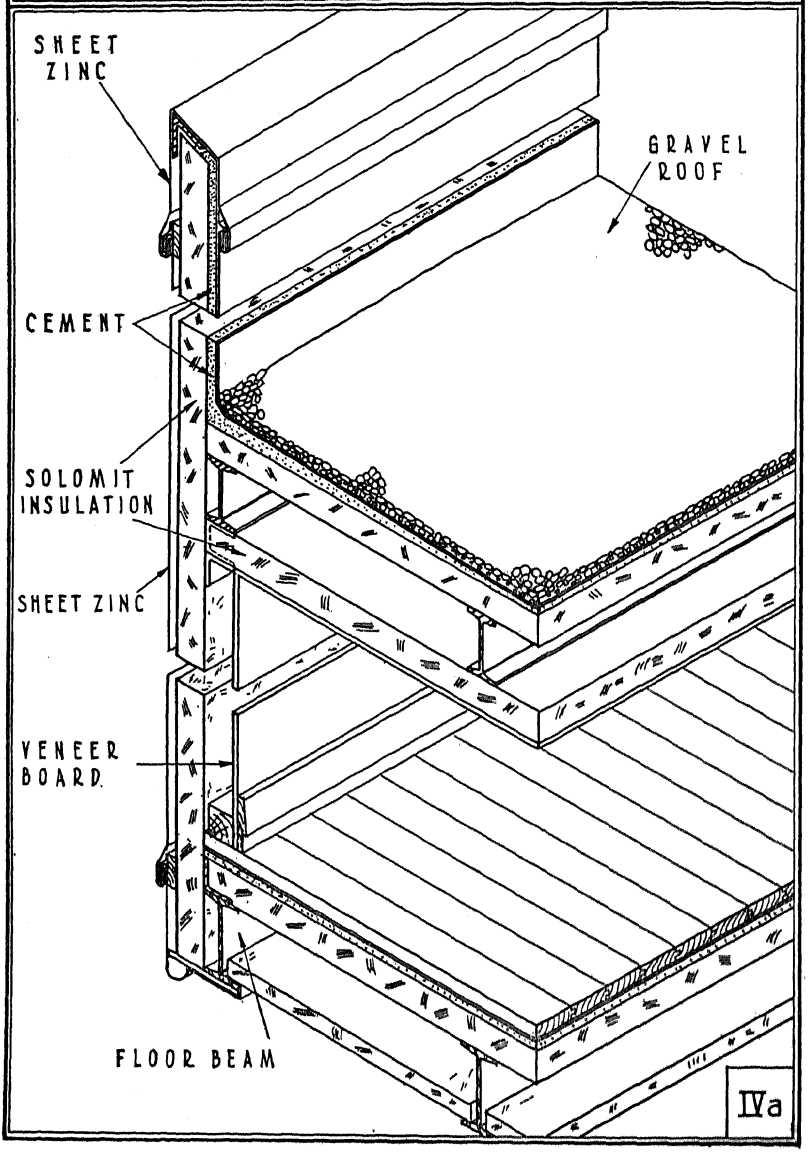

IVa

Minimal

Type IVa. Metal Frame — Skyscraper

Sponsor: Le Corbusier and Jeanneret, Architects

History. These houses were designed by the well known French architects to satisfy the requirements of the Loi Loucheur for the least expensive of workmen's dwellings under that law. Their details were published in *The Architectural Record* for August, 1930. There has apparently been no great degree of exploitation. (See Aluminaire.)

Structure. The structure is conditioned by the fact that these were duplex houses with an intermediary party wall. As a concession to tradition and to the necessity for giving stone masons some employment, this middle wall was made of masonry. At either side of it two columns, each made of paired steel channels, were placed well within the walls of the finished building. These columns supported I-girders, parallel to the masonry wall and cantilevered out to the exterior walls. This framework, together with the masonry wall, supported a structural steel floor.

The house had no first-floor living quarters. The small walled portion on the ground floor housed the laundry, heater room, storeroom, and refuse box. The walls, being entirely non-load-bearing, were cheaply constructed as curtain walls. They consisted of Solomit (baled-straw insulation) affixed to the steel, covered on the outside with sheet zinc furred out from the insulation by wood furring, and on the inside with painted veneer board spaced well in from the insulation. Floors and flat roof were of similar construction, except that the roof was finished with layers of cement and asphalt applied on top of the Solomit. The exterior stair was of steel — the railing of tubing, the treads and landing of plates — all assembled in the factory and mounted in place by bolting or riveting to the first step, which was of concrete.

Comment. The house cannot be considered only on the basis of its construction. Its name connotes its purpose. In plan the architects have adopted the Japanese principle. The only fixed parti-

tions are around the bathroom; others are either lightweight sliding panels or standard closets and cupboards of sheet metal with sliding doors. A considerable amount of furniture, such as the parents' bed, is built in and enclosed by sliding panels. Tables fold into walls. Moreover, this design is unusual in attempting an adequate insulation of the steel framing to prevent condensation.

Bibliography. 24.

MONOLITHIC HOLLOW WALL

TYPE Concrete Formed in Situ
SPONSOR Monolith Hollow Wall Company
COUNTRY United States
DATE-1925-30

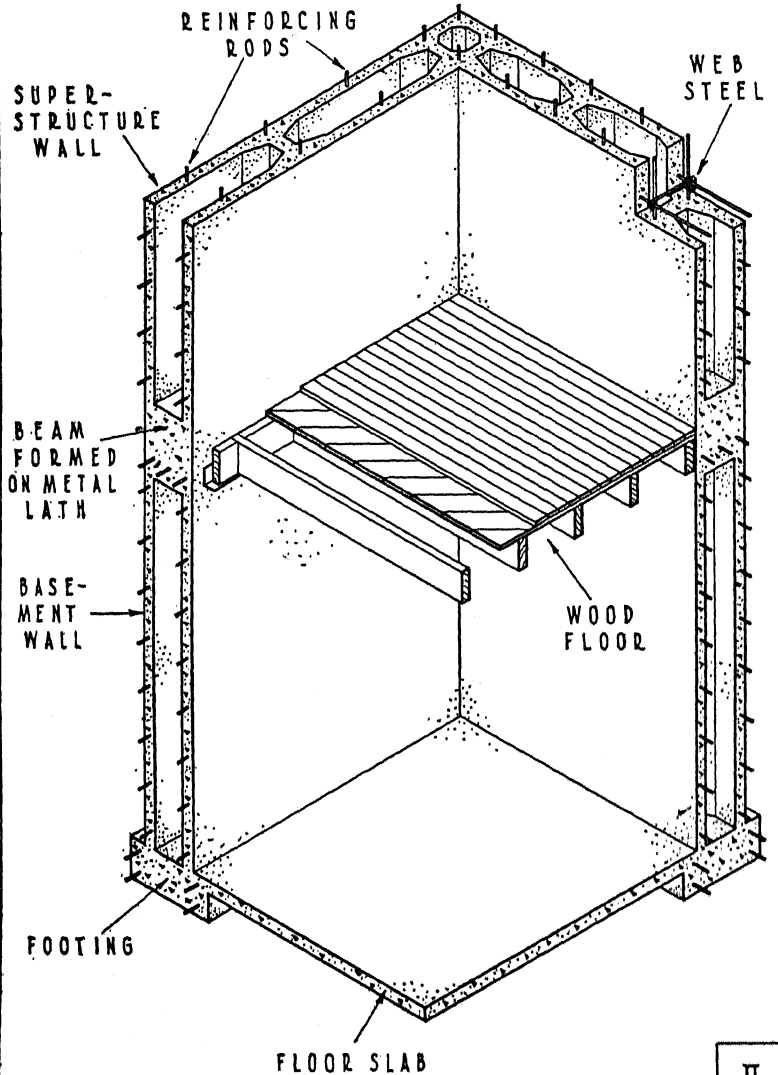

II

Monolithic Hollow Wall

Type II. Concrete Formed in Situ

Sponsor: Monolith Hollow Wall Company

History. This system of monolithic concrete construction, invented by Elmer W. Marten, has been used rather extensively in California, for residences and for institutional and public buildings. The Portland Cement Association estimates its first use to have been about 1927. It may safely be placed in the period 1925–1930.

Structure. The particular feature of this construction is the metal core forms used for making the hollow concrete wall. These are from 12″ to 42″ long, 8″, 12″, and 16″ wide, and 30″ high, and made of 14-gauge metal. Core spacings and locations are predetermined for each job. The core forms are placed over vertical guide irons, the lower ends of which are set in a recess cast in the foundation. The forms are collapsed, for removing, by using hinge spreaders.

Exterior and interior face forms, the usual wood panels, are erected of full story height. Reinforcing rods are placed in both wall faces in both directions. Walls may be 14″ or more in thickness.

The exterior may be untreated, painted, or stuccoed. Interior plaster is generally applied directly to the concrete. Floors may be of any type, usually wood.

Comment. The core forms seem to be the only innovation in this construction.

Bibliography. 50.

MORRILL

TYPE Concrete Formed in Situ
SPONSOR Milton Dana Morrill
COUNTRY United States
DATE.-1908

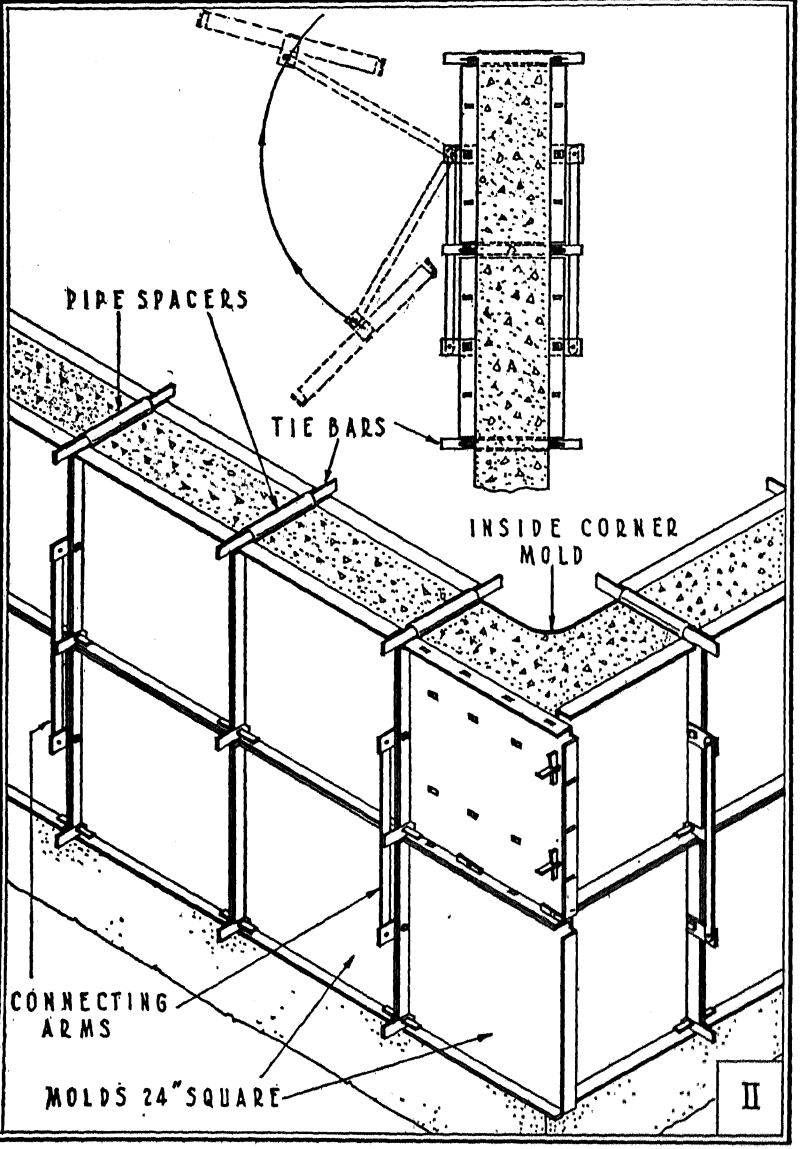

Morrill

Type II. Concrete Formed in Situ

Sponsor: Milton Dana Morrill

History. This system of pouring monolithic walls was first used in a house built during 1908. Its use was most extensive from 1913 to 1920, but it was still in use in 1931. Groups of dwellings and individual houses built by this system are widely scattered, the most important projects being 75 dwellings for the General Chemical Company, Wilmington, Delaware, and 40 dwellings in Pennsylvania for the Delaware, Lackawanna and Western Railroad.

Structure. The Morrill system consists of a patented form method of pouring monolithic concrete walls. The standard mold is a 24″-square metal sheet, flanged and punched for assembling in multiples. Tie bars connect the mold corners through the wall, and short lengths of pipe outside the bars act as spreaders. Adjacent molds are connected by bars attached to the middle points of their flanges and pivoted so that one mold may be swung out and moved ahead of the adjacent unit, either forward or upward, and secured in position ready for pouring. The arrangement of these units and the order of pouring may be one of the following four methods:

(1) The plates are assembled tier on tier to story height, with outside shoring to prevent bending out of line. After the forms are removed, the spreader pipes are driven out and wood nailing plugs are driven into the holes from the inside, the outside being pointed with mortar.

(2) The two lower tiers of plates are secured for pouring. As soon as the concrete in the lower tier is set, the lower plates are swung out and up and are secured for pouring the third tier. The pouring proceeds upward to the wall height required.

(3) In this method, two lines of plates are in vertical alignment and the plates are moved progressively forward instead of upward. This is suitable only for small jobs.

(4) Several plates in one tier are placed and poured. As the concrete hardens, the molds first filled are removed and reset ahead.

The two-tier upswing method is claimed to be the most economical and rapid.

Outside finish is generally one coat of stucco. Inside finish is lath and plaster, which may be furred out for insulation. Heat insulation may also be provided by casting an insulating core block in the center of the wall. This is secured in place by cutting the spreader pipes in half and placing the block between the short lengths of pipe.

Comment. An insulating core block cast inside of the wall is pierced by metal tie bars every 24″. Apparently the insulating material would be used more effectively when placed inside the wall, under lath and plaster.

Bibliography. 50.

NEEDHAM

TYPE Pre-cast Unit
SPONSOR The Needham Concrete House Company
COUNTRY United States
DATE - 1921

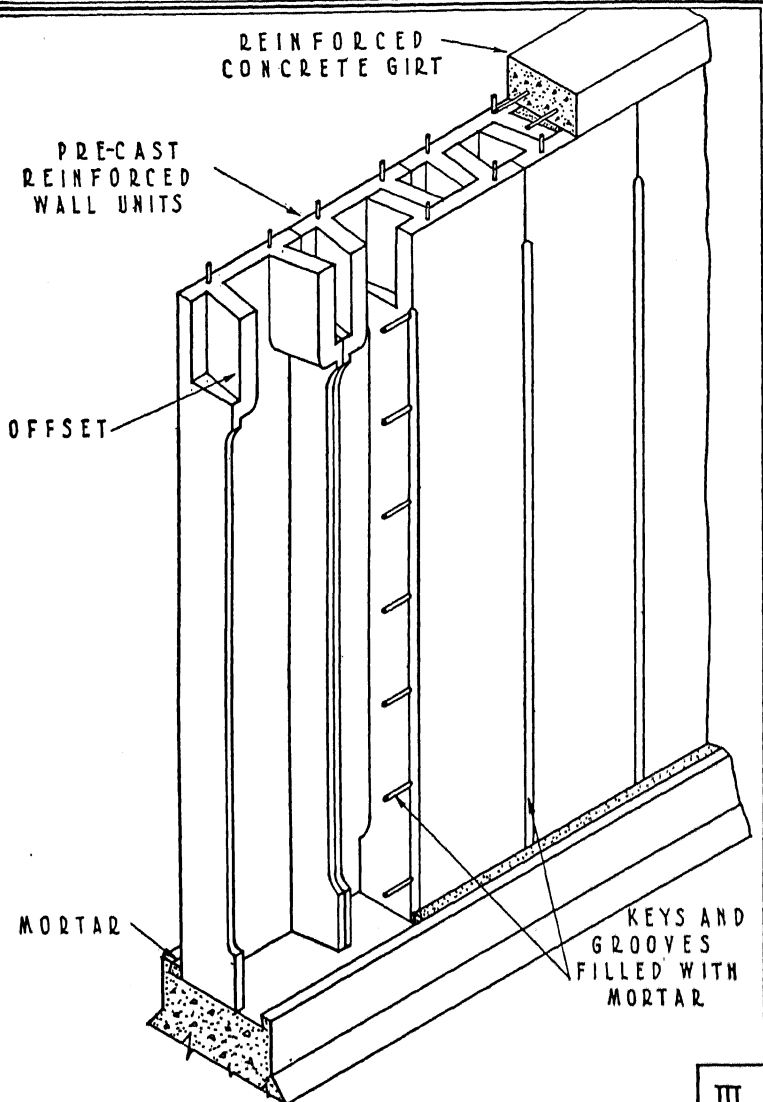

III

Needham

Type III. Pre-cast Unit

Sponsor: The Needham Concrete House Company

History. This system, consisting of a pre-cast concrete outside wall construction, was first used in 1921. A few dwellings of this type have been erected in Houston, Texas.

Structure. The wall units are channel-shaped, pre-cast, reinforced concrete slabs, 16″ wide, 6″ to 8″ deep, and story-height in length. These units are erected in the wall in two rows, flanges inward, in an interlocking position, i.e., with the flanges of one row in between those of the other row. The lower ends of the units fit into a groove in the foundation and are mortared in place. There is a horizontal offset in the flanges, about 8″ from the top, so that when the units are in place the vertical open spaces are shut off by the horizontal portion of the flange offsets. A reinforced-concrete girt is poured above the units, the concrete also filling the top spaces above the offsets and tying the units together. The outer edges of the slabs are recessed so that a vertical, semi-circular groove is formed in the outer wall surface at the vertical joints. Diagonal key slots are also cast in the outside faces of the flanges, connecting with the joint groove. The key slots and the vertical grooves are filled with mortar, flush with the face of the slab.

Pre-casting is done in wood or metal molds in a central plant or on the job. As the units weigh 200 to 300 pounds each, a small stiff-legged derrick or crane is used to facilitate erection.

The exterior is generally stuccoed. The interior finish is plaster, directly applied to the wall. Floors, partitions, and roof may be of any construction.

Comment. Some degree of wall pre-finish would seem to be possible with units of this proportion, by giving the slabs in the mold a finish texture suitable for exterior and interior finish, provided the climate did not require additional heat insulation. If added heat insulation is required, it would probably have to be applied to the inner surface of the wall.

Bibliography. 50.

NEUTRA DIATOM

TYPE Pre-cast Unit and Suspension
SPONSOR Richard J. Neutra
COUNTRY United States
DATE-1925-30

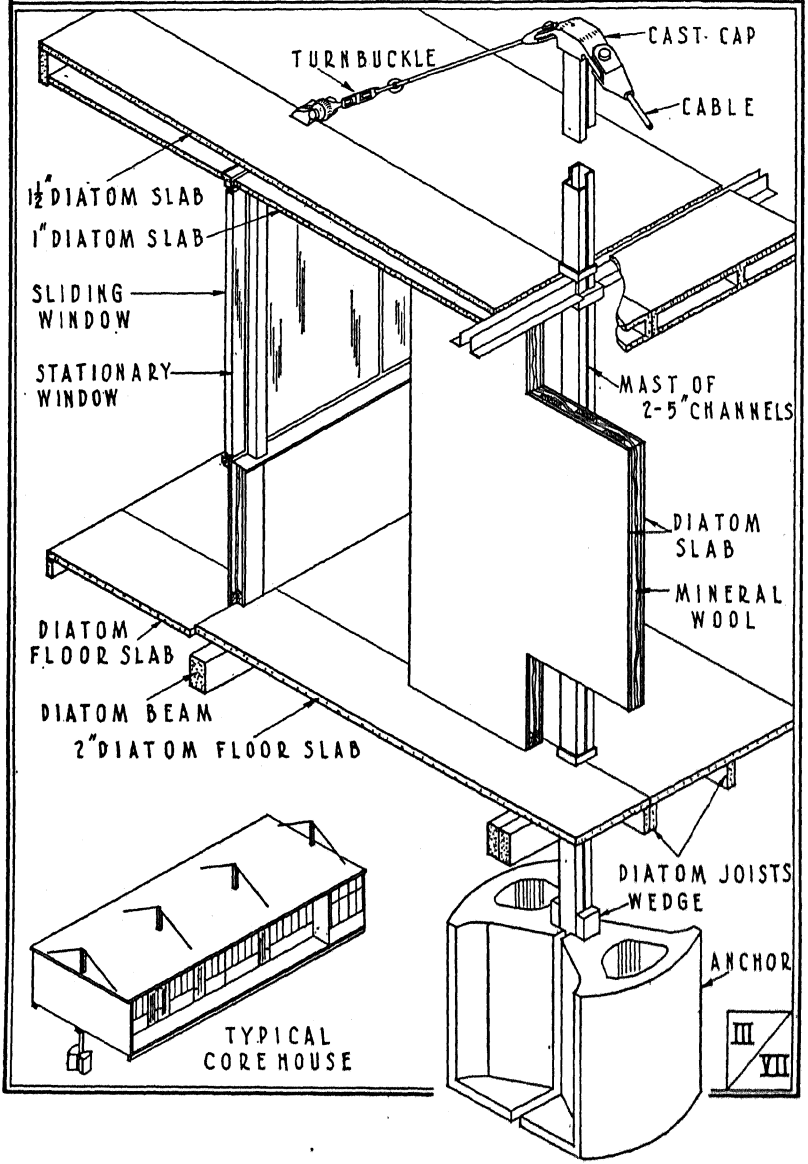

Neutra Diatom

Type III–VII. Pre-cast Unit; and Suspension

Sponsor: Richard J. Neutra (with Peter Pfisterer as associate)

History. Richard Neutra, one of America's leading exponents of the International Style of house design and unquestionably one of the most brilliant architects practising in the United States, is of Austrian extraction. A student under Adolph Loos and associated with Mendelsohn and Henning in developing the plans for the building of the Berliner Tageblatt, he has long been concerned with the possibilities of pre-fabrication. The Diatom house is but one example of his efforts in this direction. The possibility of using pre-fabricated blocks based on diatomaceous earth appears to have been suggested by Neutra as early as 1923. It was published in "How America Builds" in 1926, and was attentively commented upon then although the issue of pre-fabrication was not a live one. The house presented here represents considerable expansion of the original ideas, and was published in *The Architectural Record* for January, 1934. Although diatomaceous composition units have been employed for residential work by Neutra and by others in England, Czecho-Slovakia, and Austria, and although Neutra has sponsored several other ideas that have been put into practice, the "One-Plus-Two" Diatom house has not yet been built. Its use is indicated in a proposed cooperative farming community for San Diego County, California.

Structure. The house really involves two principles in combination. The basically interesting thing in this building is the suspension principle, using central masts from which the walls are suspended in tension (see Dymaxion). Neutra has long been interested in the suspension principle, and used it in the design for the League of Nations palace in 1926. It was subsequently used by Moisieff in the suspension dome of the Transport Building at the Century of Progress, and rather broadly in the Health House built in Los Angeles, for an increased top floor suspended in all its projections from a cantilevering roof frame. In the Neutra scheme

there are a number of such posts or masts, each made of a pair of 5″ channels with their channel sections facing. These posts are wedged into pre-fabricated hollow footing blocks of pre-cast vibrated concrete, each half weighing about three-quarters of a ton. Floor joists, in this case shown to be pre-fabricated of a pair of angles and a web plate, are framed to the masts to support the inner edges of the pre-fabricated Diatom floor slabs or panels. The outer edges of these are received at the wall, which is in turn held up from the mast by means of cables in tension supported on a cast cap at the top of the mast. The cables may be tensioned by a turnbuckle.

The diatomaceous-earth, or "Diatom," panels or slabs that serve both as floor and wall elements are made of infusorial earth, chemically compounded and hardened under steam pressure. They are light and said to be adequately strong. A further treatment with a binder, Colophonium, and other ingredients, is said to render the surfaces water-repellent and to eliminate the need of plaster, so the synthetic panels are exposed directly to the weather. The houses pictured by the inventor show a considerable amount of fenestration, postulated no doubt on the climate of California.

Comment. The suspension principle here suggested is naturally most successful if the units to be held by suspension are light. Hence the diatomaceous-earth compound, if possessing the requisite other properties, would seem to be ideal. The double panels forming walls and floors should afford insulation. Neutra also contemplates low-temperature-radiating metal panels, and use of vacuum tubes for lighting by setting them under outside roof projections and employing the light-reflecting characteristics of the metal-surfaced ceiling. He has also anticipated the growth of a family by designing the house in units to which further units may be added. Quoted costs are low.

Bibliography. 28, S.

OLMSTED

TYPE Concrete Formed in Situ and Pre-cast Unit
SPONSOR A. H. Olmsted
COUNTRY United States
DATE-1930-35

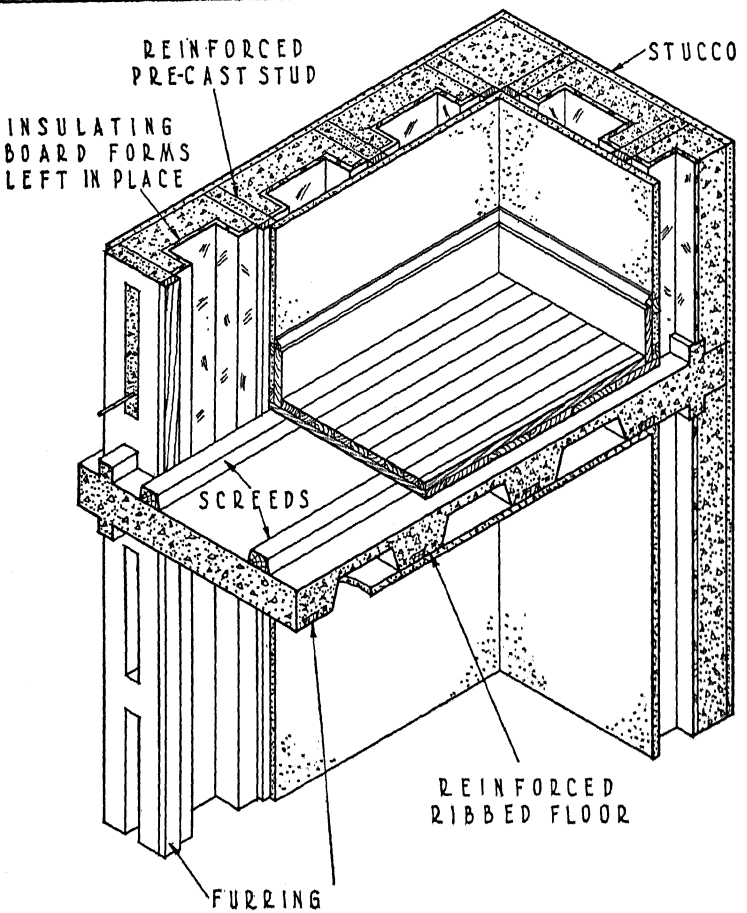

II/III

Olmsted

Type II–III. Concrete Formed in Situ; and Pre-Cast Unit

Sponsor: A. H. Olmsted

History. This monolithic wall and floor system has been used for four dwellings at Rye, New York, and a few others elsewhere. In the spring of 1935 it was used for a twelve-room house for Dr. Michael Williams in Westport, Connecticut.

Structure. The walls consist of concrete studs, pre-cast flatwise in gang molds on the job, 16″ on centers, with wood furring strips cast on them. These furring strips also act as dividers between molds.

The studs are put in place with temporary bracing. Stiff board-type insulation is sprung between the studs on the inside to serve as forms and as permanent insulation. Wood forms are attached to the outside and horizontal reinforcement is passed through the openings cast in the studs. The concrete is poured between the forms and flows through the stud openings, locking the studs together.

Floors are poured slab and reinforced rib joists. In the latest example, the Williams house, the floor construction was of pre-cast concrete joists and pre-cast lightweight concrete slabs with oak flooring above.

Outside finish may be stucco directly on the concrete, or siding nailed to furring strips cast on the studs. Inside finish is lath, nailed to the stud furring strips, and plaster. Floors above living quarters have a flat plaster ceiling.

Comment. Examination of ten-year-old houses is said to have shown them to be in excellent condition.

Bibliography. 50.

PALMER

TYPE Panel
SPONSOR Palmer Steel Buildings, Incorporated
COUNTRY United States
DATE-1934

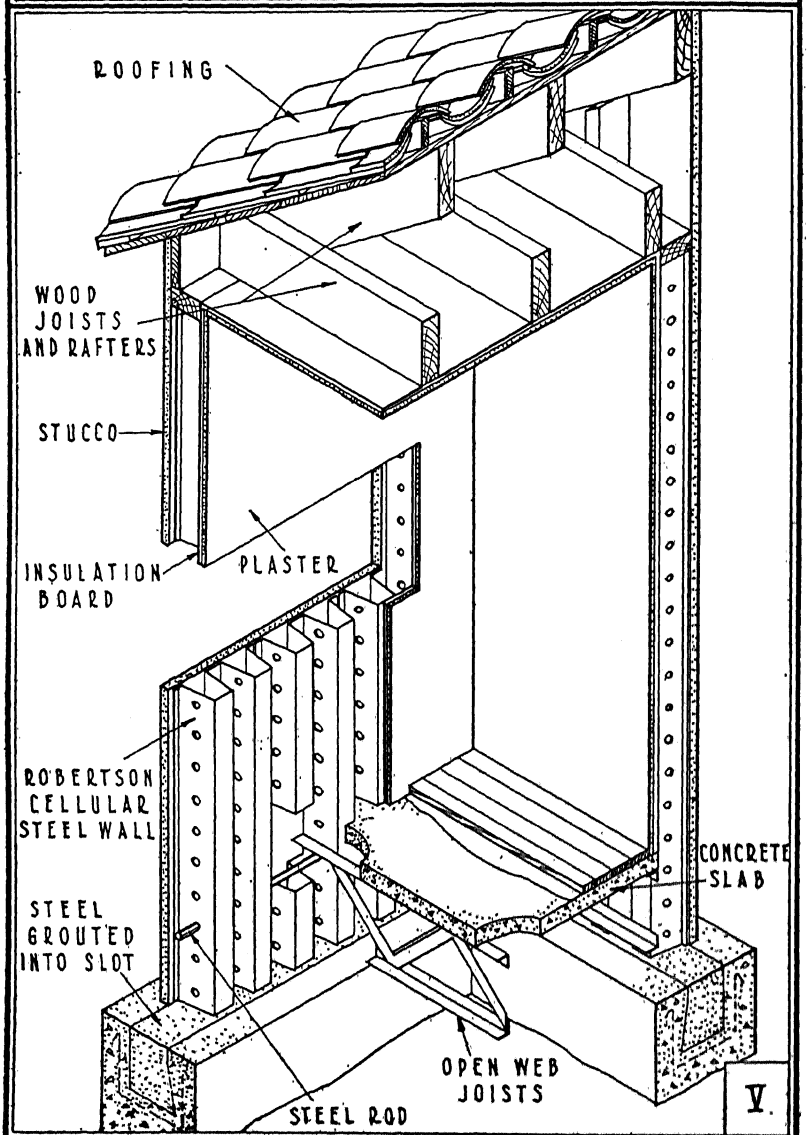

V.

Palmer

Type V. PANEL

Sponsor: Palmer Steel Buildings, Inc.

History. This system seems to have been sponsored by Palmer Steel Buildings, Inc., of Southern California, and is said to have been invented by Vincent Palmer, an architect, who retired from the practice of his profession to become the president of the corporation. One building in accordance with the system was built on Wilshire Boulevard at Windsor, Los Angeles, and as a result of the demonstration the corporation states that it sold eight jobs before the building was completed in 1934. The corporation performs no architectural or contractual service but confines itself to preparation of the steel details and fabrication of the steel. It is too early to know what success will crown the effort.

Structure. (See Lindeberg.) Like some other systems illustrated in this Supplement, the Palmer system employs the H. H. Robertson Company W-shaped cellular unit as its fundamental panel. These panels are made of thin-gauge copper-bearing steel, shaped as shown on the drawings, with the face plate on the exterior. They are furnished in sections about 12″ wide and of story height. They are provided with male and female joints or locking devices on either side of their lengths and with holes at 4″ intervals along their lengths. The section is usually 4½″ thick.

A specially prepared cast concrete foundation provides a slot into which the units are placed and then grouted in. Steel rods passing through the repetitive holes support open-web joists for the floor. These joists support a concrete floor slab and optional flooring. Wood rafters and roof construction are usual. Exterior finishes are optional and the usual plaster interior finish is supplied by nailing plaster board to the steel by means of case-hardened barbed nails and utilizing this board as grounds.

Comment. Good insulation is claimed because the plaster board or insulation board is placed inside the steel, and the circulation of air through the ports of the cellular steel units tends to keep the

structural frame at atmospheric temperature so that condensation is avoided. The company states that the cost of such a house need not be over 10 per cent in excess of one produced by ordinary methods. Unit costs have not been published.

Bibliography. S.

PARKHURST

TYPE Pre-cast Unit
SPONSOR L. M. Parkhurst
COUNTRY United States
DATE-1930-35

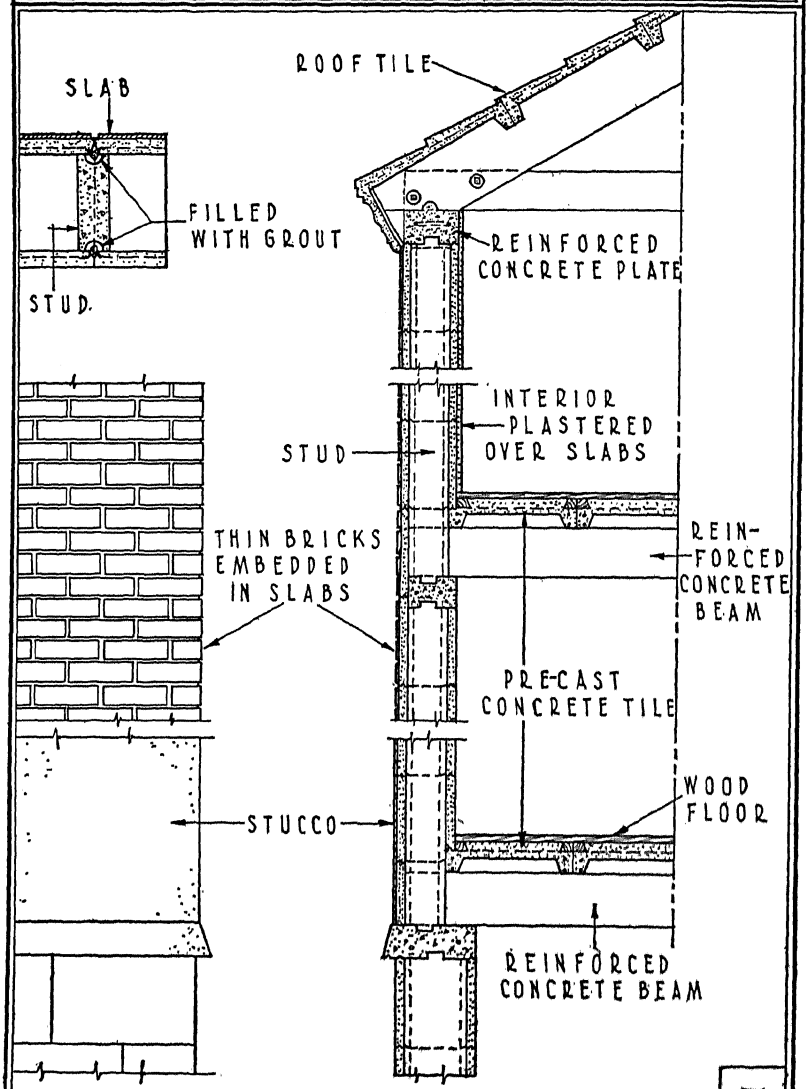

III

Parkhurst

Type III. Pre-cast Unit

Sponsor: L. M. Parkhurst

History. The sponsor of this system is prepared with plant and organization to place it on the market. A demonstration panel has been erected at the Parkhurst Systems plant, but to date the author has no advice of any actual construction.

Structure. Walls consist of pre-cast, reinforced-concrete studs, spaced 18″ on center, to which pre-cast Haydite concrete slabs are attached on exterior and interior. Studs are 2″ x 8″ in section in the basement and 2″ x 6″ above grade. The Haydite slabs are 12″ high, 18″ long, and 1″ thick. The edges of the studs have grooves in which the ends of the reinforcing wires are left protruding. These ends are twisted with the ends of the reinforcing wires of the slabs and are then embedded in grout with which the groove spaces are filled. Bond beams and door and window frames are of pre-cast concrete. Bond beams have recesses which receive the ends of the studs above and below.

The floor construction is pre-cast reinforced-concrete beams which carry channel-shaped, pre-cast, reinforced-concrete slabs. Similar slab units in the roof form a fireproof, concrete nailing deck for ordinary shingle roofing.

Interior wall finish is plaster applied directly on the slabs. Wood flooring is nailed to wood strips cast in the floor units. Exterior surfaces may be stuccoed, although the sponsor is experimenting with other types of finishes, such as thin brick embedded in the slab.

Comment. This system has the advantage of being a dry construction, except for wall plaster.

Bibliography. 50.

PHOENIX

TYPE Pre-cast Unit
SPONSOR German-Unknown
COUNTRY Germany
DATE-Unknow

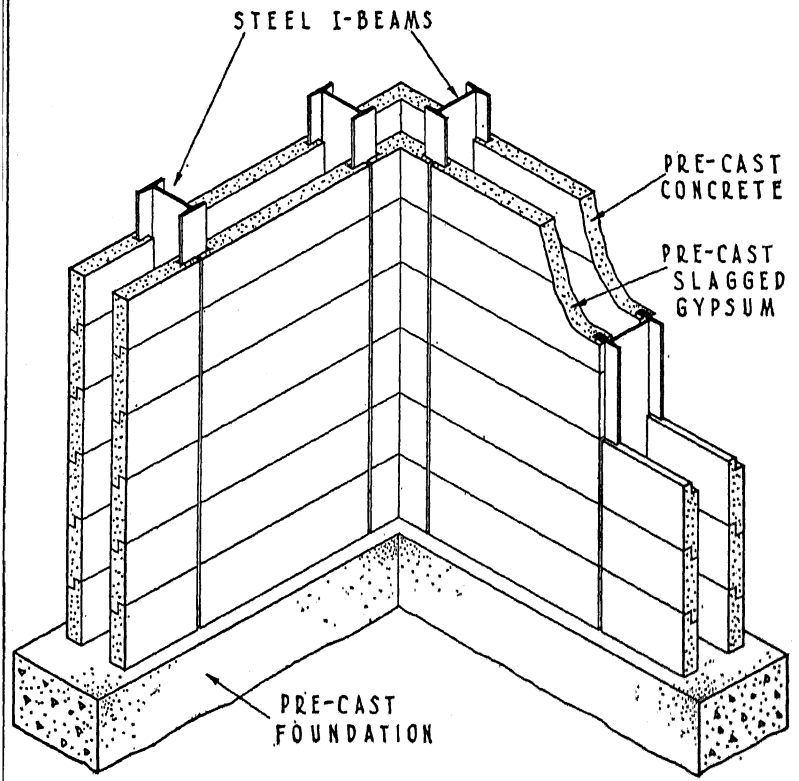

Phoenix

Type III. Pre-cast Unit

Sponsor: German — Unknown

History. Unknown.[5]

Structure. On a pre-cast foundation, steel I-beams form studs, apparently at 3′–0″ to 4′–0″ centering. To these are attached slabs which have grooves to fit the flanges of the I's and which are also lapped horizontally over the next lower course. Interior slabs are of slag gypsum, while exterior slabs are of Portland cement concrete. The slabs are about 2″ thick and the space between them is filled with insulation. It is maintained, probably with reason, that the system is suitable for multi-story buildings.

Comment. As far as is known, the system provides only a wall. It is difficult to cast concrete slabs like these. The little tongues around the vertical grooves are frangible. Mastic or other waterproofing unquestionably needs to be carefully applied to the vertical joints, which are treacherous. The building would be practically fireproof.

Bibliography. 42, 45.

[5] For a general statement on the difficulties encountered in obtaining positive facts concerning European efforts, see the Foreword to this Supplement, p. 331.

PLATE GIRDER

TYPE Panel
SPONSOR Housing Company
COUNTRY United States
DATE-1929

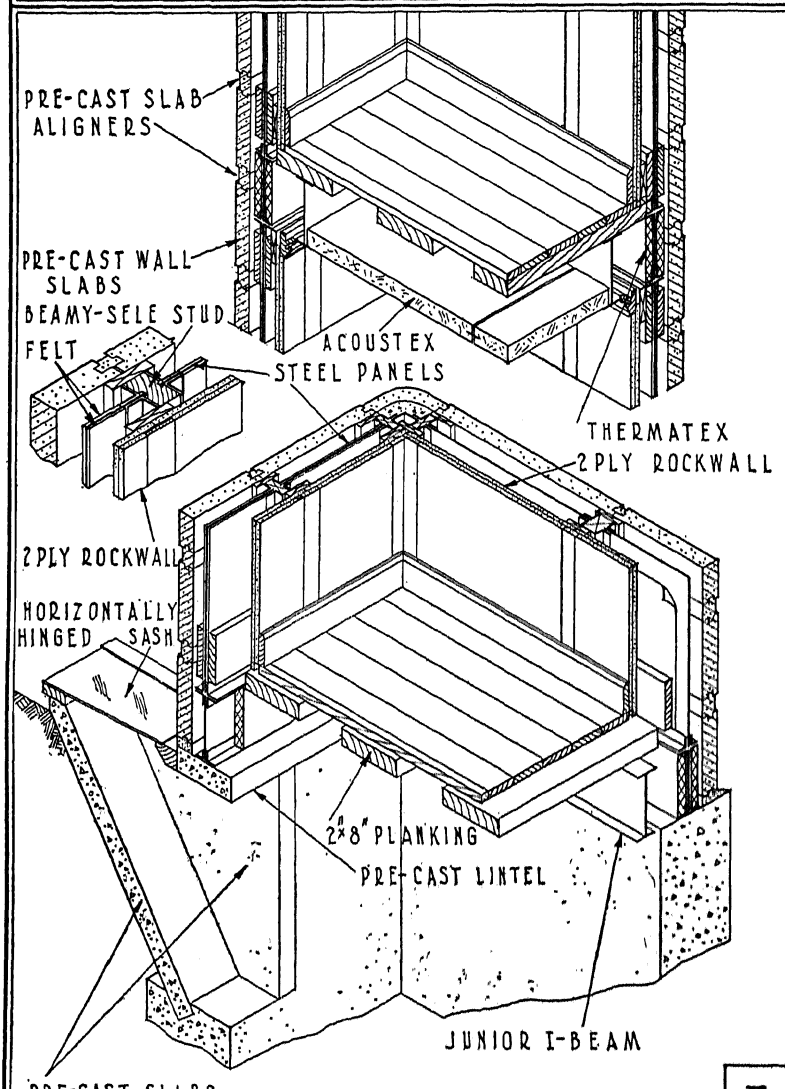

V

Plate Girder

Type V. PANEL

Sponsor: Housing Company

History. Like all the Bemis designs shown in this volume, this system was sponsored by a subsidiary company, Housing Company. Like all the others, it was first tried out in the laboratory and then incorporated into one or more houses. The Plate Girder construction was used in one house, erected in Newton, Massachusetts, in 1929–1930. Since then, it has not been utilized in construction outside of the laboratory, because of depression conditions.

Structure. The fundamental theory of the Plate Girder construction is to provide a central web of very thin steel to prevent water and weather infiltration. This cooperates on the edges of the panels with angles that afford most of the structural strength. The joint was sealed in the construction shown by extending the webs of the panels slightly beyond the flanges and receiving this projecting web in a saw kerf in an asphalted wood member which also served as grounds. Bolts extending through the flanges of adjacent panels and through the wood member drew the panels into tight engagement. (See Boehler.) Panels were of story height, of the order of 2′–0″ wide, and were covered with asphalt and fiber for sound insulation. Girts were of the same type as the panels, but about 8″ high, and extended for a number of panels in length. Junior I-beams were used for the floor framing.

The exterior and interior of this chassis might be anything desired. The actual construction used was as follows. Interior walls were finished with 2-ply gypsum-board panels in which the ply nearest the interior of the wall was set back from the edges of the other ply by 1″ all around. These panels were then screwed to the proper grounds and a small strip of gypsum board 2″ wide inserted in the groove was provided to finish the joint. In some rooms the joint was clearly expressed by slightly beveling the edges of both panel and filler. In one or two rooms it was not

beveled but covered with plastic paint. (For further exposition of the gypsum-panel system, see "E" Frame.)

Ceilings were pre-fabricated, either of acoustical material or of fiberboard, supported on the lower flanges of the floor beams and tied together between panels by narrow metal strips received in slots along the panel edges. Thus again the panel joints were clearly marked.

The exterior was of pre-cast concrete slabs with a special pre-cast aligner, described in more detail under "E" Frame. The aligners were screwed to the grounds.

A special area window of pre-cast concrete was used for cellar lighting. It admitted more light than an ordinary cellar window, with less excavation, and permitted the first floor to come essentially to the ground level without provision of areas.

Comment. The interior panels with joints expressed have been shown to a large number of architects, most of whom have preferred frank expression of the joint to the efforts to cover it with plastics, and have indicated their approval of the interior appearance. This house has clearly demonstrated that pre-fabrication is possible without loss of esthetic value.

Bibliography. S.

POPE AND COTTLE

TYPE Panel
SPONSOR Pope and Cottle Company
COUNTRY United States
DATE-1921

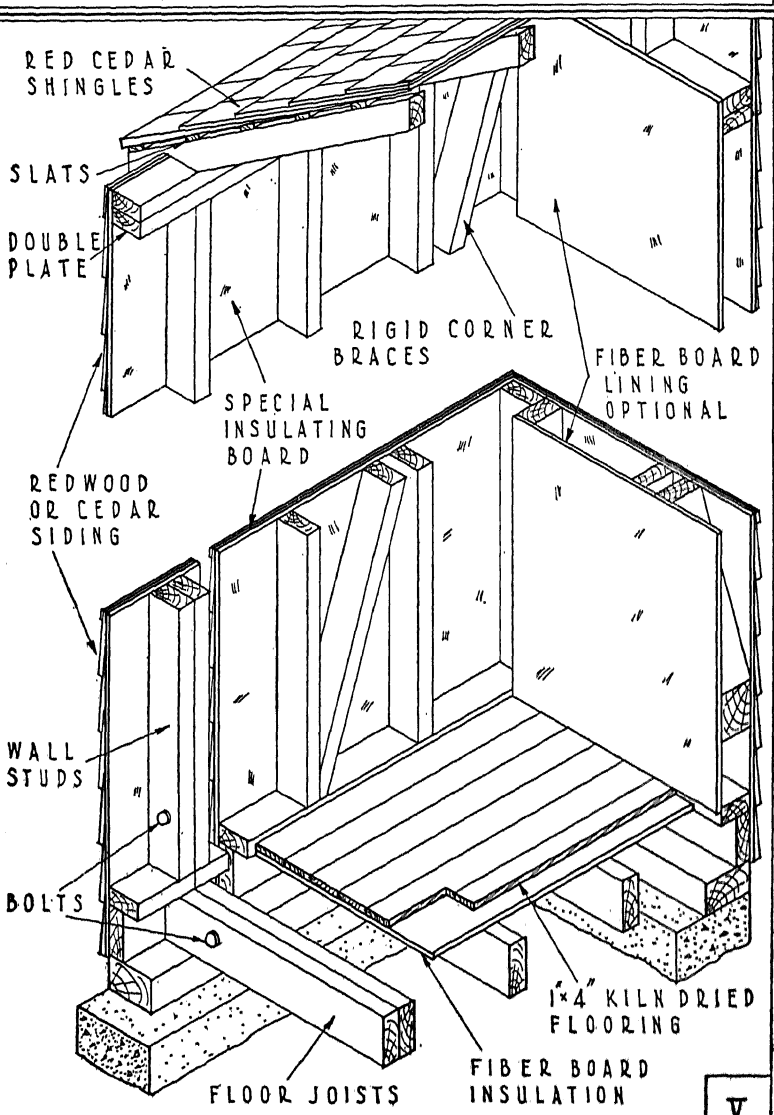

V

Pope and Cottle

Type V. PANEL

Sponsor: Pope and Cottle Company

History. This company has been selling its sectional wood construction since 1921. The advertised product includes cottages, bungalows, roadside stores, filling stations, tea rooms, schoolhouses, garden furniture, and fences. The company offers an architectural service to assist in working out plans, a foreman to supervise erection, and an interior-decorating department to advise and provide suitable furnishings.

Structure. The buildings come in 6′–0″ wall, floor, and roof sections, which are bolted together on the job. The framing is that of the conventional wood house except that double studs, rafters, and floor joists occur where adjacent sections are bolted together. The pre-made wall sections include special insulation board and redwood or cedar siding outside the studs. Roof sections have wood battens nailed to the rafters, the battens serving as nailing strips for red cedar shingles. Floors are 1″ matched flooring laid on fiberboard. For summer cottages, the wall and roof framing is not covered inside; for year-round cottages, it is covered with fiberboard applied on the job. Sections are shipped from the factory finished and painted.

As an option, the cottages may be bought unpainted, and the roof, floor, and partition sections pre-cut but not assembled.

Comment. There is no evidence yet of reduction in costs sufficient to solve the low-cost-housing problem.

Bibliography. S.

PORCELAIN STEEL

TYPE Panel
SPONSOR Porcelain Steel Buildings Company
COUNTRY United States
DATE- 1925-30

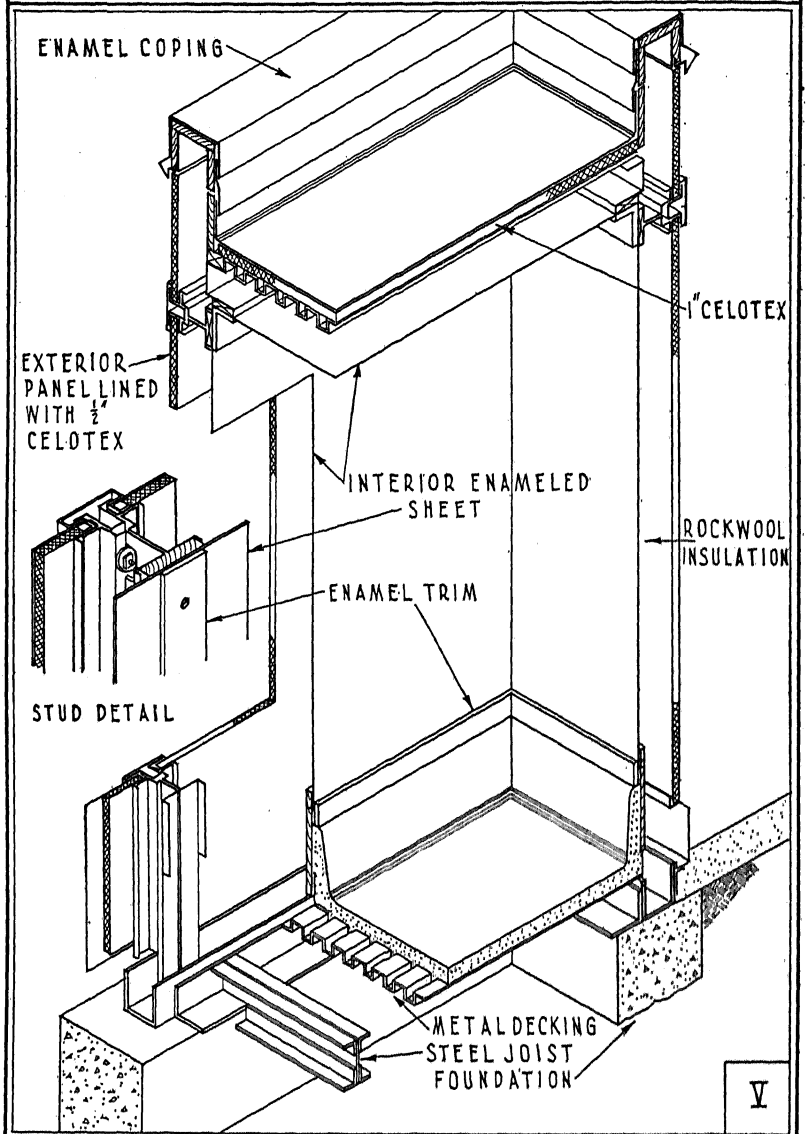

V

Porcelain Steel

Type V. PANEL

Sponsor: Porcelain Steel Buildings Company

History. The sponsors started the development of porcelain-steel construction in 1925. The first porcelain-steel building was erected in 1928, and since then 36 such buildings have been erected, all for commercial purposes (lunchrooms). The house is a recent addition to the company's production.

Structure. By means of gaskets, bolts, nuts, and lock washers, a basic steel frame of 16-gauge spot-welded studs and girts, of cross-section shown and spaced at about 4′ centers, supports exterior faces of porcelain-enamel steel backed with insulation and fastened to the frame. The inside finish is Monel- or porcelain-finished metal screwed to a wooden furring strip held by the studding, the finish joints being covered with screwed-in battens. Exterior finish is also battened, but here the cover is enameled and is keyed to the U-shaped device that holds the facing sheets to the framing (see detail).

The floor system is of the joist and ribbed-steel-sheet type, covered with concrete. Insulation is provided by filling the interstud space with rock- or glass-wool. The roof deck is insulated with 1″ of fiberboard, to which a ply roofing is applied in the usual way.

Comment. None.

Bibliography. 67.

PORETE

TYPE Concrete Formed in Situ
SPONSOR Porete Manufacturing Company
COUNTRY United States
DATE-1932

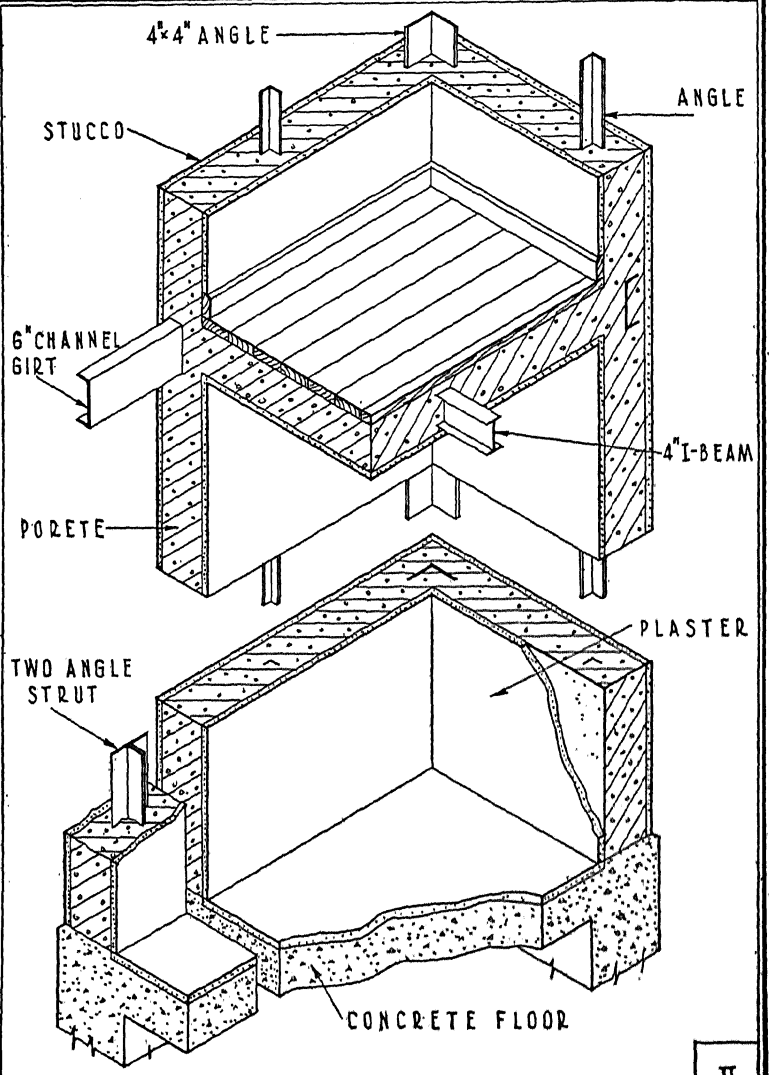

II

Porete

Type II. Concrete Formed in Situ

Sponsor: Porete Manufacturing Company

History. An office building constructed by the Porete Manufacturing Company for its own use, in Newark, New Jersey, in 1932, is the only example of this system known to the author. The effort was to increase the use of lightweight concrete poured in place, in cooperation with a very lightweight steel frame. With the decline in popularity of the aerated types of gypsum and concrete, the effort apparently lapsed.

Structure. The building was 26′–0″ x 32′–0″, two stories high. There were twelve steel columns, a 4″ x 4″ x ¼″ angle at each of the four corners, six intermediate posts of 2½″ x 2½″ x ¼″ angles in pairs, and two 4″ H-columns in the center. The floor and roof framing was of 4″ I-beams on 24″ centers. Double twisted 8-gauge steel wire was used for diagonal bracing.

Forms were applied in the usual way, the aerated concrete poured as shown in the drawing, the concrete kept wet, and the forms removed in two days. Floors and walls had 4″ of the lightweight concrete and a 1″ fill on each side. The floor finish was of cement and sand, the roof of 5-ply roofing directly over the fill. Stucco was used on exterior walls and lime plaster on the inside, producing a wall 7½″ thick over-all.

Comment. The sponsors claimed there was no condensation in the structure because of the insulating value of the aerated concrete. This aerated concrete was of the foam, rather than of the chemical, type, and weighed 45 pounds per cubic foot when dry. Low cost was also claimed.

Bibliography. 8, 25, S.

ROCKWOOD

TYPE Pre-cast Unit
SPONSOR Rockwood Corporation
COUNTRY United States
DATE-1925-30

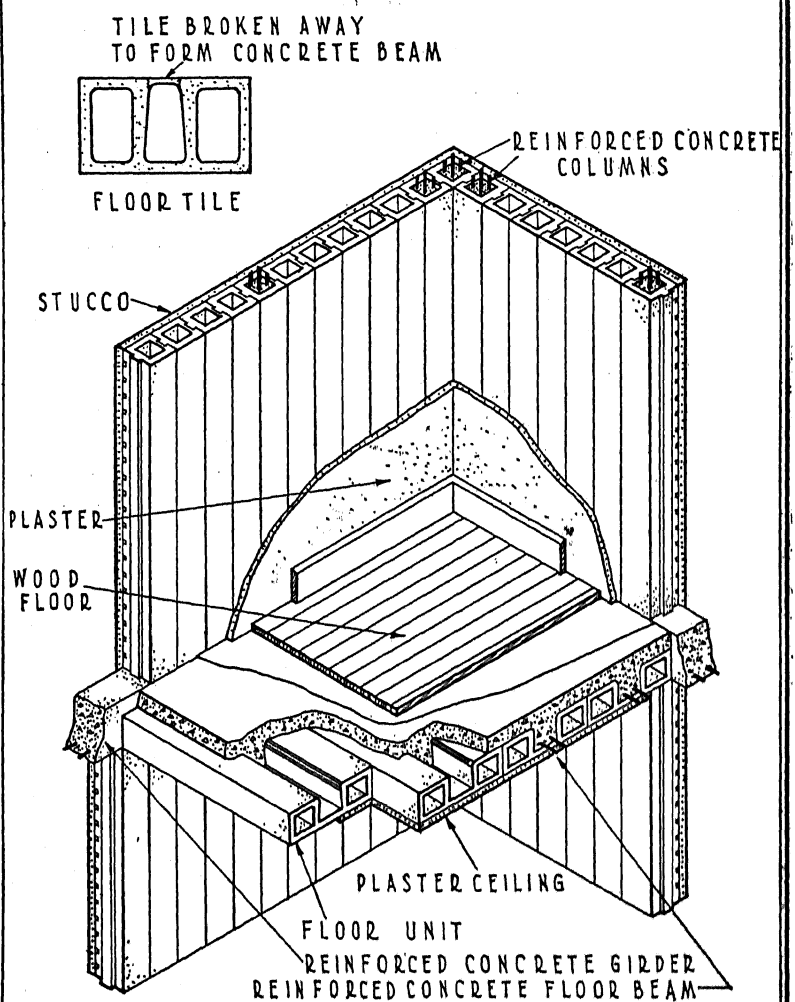

Rockwood

Type III. Pre-cast Unit

Sponsor: Rockwood Corporation

History. This system, based on patented construction, has been in use since 1925 at least. A considerable number of houses and other buildings have been erected by it, mostly in the St. Louis area but also in other sections of the country. In 1935 the corporation was still reported to be actively engaged in marketing its product.

Structure. This is a system of walls, floors, and roofs based on pre-cast gypsum units of wall or floor thickness and of lengths corresponding to wall heights and to moderate floor lengths. It envisions setting the units up side by side in the wall and reinforcing and pouring such units as are required for wall strength.

The floor units come to the site in the shape shown in the upper left-hand corner of the drawing. The central upper web, being thin, is easily frangible, and after the units are in place a tap of the hammer breaks it; this permits the placement of reinforcing rods and concrete to produce a reinforced concrete floor essentially of tile-and-joist variety. A reinforced girder is formed around the floor at the same pouring.

In general, stucco and plaster are contemplated as the exterior and interior finishes, respectively, but provision is also made for the anchorage of brick veneer, and a representative of the sponsor states that the nailing is good enough to permit use of clapboarding. The outer face of wall units may be corrugated, as shown in the drawing, to afford a better bond for stucco or plaster.

Comment. The units are cast by a new process involving the use of a rubber mandrel which stretches on being pulled out, leaving a clean break from the internal walls without rupture of the crystalline formation. The fact that gypsum expands and then contracts on setting should result in relatively accurate units, perhaps sufficiently so to justify the claim that when placed side by side with the tongues driven into the grooves the resulting

wall surface is smooth enough to finish directly with plastic paint or wallpaper. The walls of the units are thin, as compared with those of the usual gypsum block, and the superficial area per unit of weight is considerably larger, thus materially increasing the speed of drying.

The house thus built should be fireproof, have sufficient structural strength, and erect rapidly.

Bibliography. 22.

Rostone

Type III. Pre-cast Unit

Sponsor: Rostone, Inc.

History. The Rostone system first became prominent with the sponsors' exhibit at the Century of Progress in 1933, although they had been working for some years on the problem of manufacture of their synthetic stone. They also built a house in Chicago in 1933 in cooperation with one of the larger steel companies. The structure is a combination of two ideas.

Structure. The steel frame used is on a spacing of 4′–0″, which corresponds to the horizontal dimension of the Rostone slabs. These slabs are 18″ high and 2″ thick, with horizontal and vertical ship-lap joints in mastic, and are bolted to the steel studs through a cushioning layer of insulating board. Floors consist of junior I-beams, with furring strips of wood supporting wallboard ceilings. Metal decks span the beams to form the floor. Flat roofs are completed by the addition of insulating boards, asphalt, mastic, fabric, and Rostone roof slabs. The bolts for the wall slabs are cast into the Rostone slabs.

Comment. Rostone itself is one of the most interesting new building materials of the past decade. It is a synthetic product, composed of shale alkaline earths and limestone quarry waste. It can be produced in a variety of colors, and in slabs, panels, and other forms to exact dimensions. In properties it resembles limestone, but it is much cheaper.

A material of this type obviously has a wide variety of uses other than in pre-fabricated housing, and it is not to be expected that the Rostone company will confine itself to this field.

As to the Rostone house, the construction is admirable from the point of view of strength, fire resistance, and insulation; it does not appear to be unusually cheap. A great many materials are used. Most of these, such as insulation, wallboards, beams, and studs, are unquestionably susceptible of mass production. Rostone slabs themselves are in the same category, if the unit

ROSTONE

TYPE Pre-cast Unit
SPONSER Rostone, Incorporated
COUNTRY United States
DATE - 1933

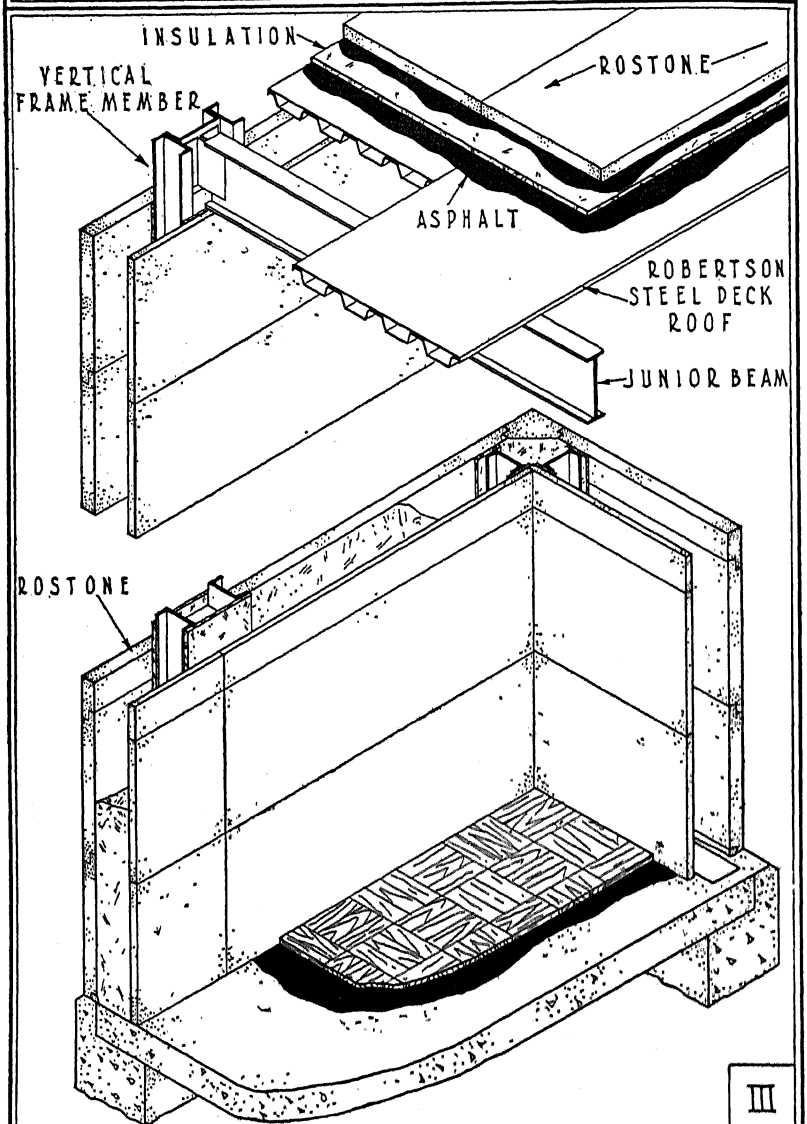

III

of measure of the house can be kept to 4′–0″. If any departure is made from this, the problem becomes increasingly difficult, as any one is well aware who has ever tried to schedule large slabs for a number of buildings.

Bibliography. 12, 26, 28, 35, 51, S.

SIMPSON CRAFT

TYPE Pre-cast Unit
SPONSOR John T. Simpson
COUNTRY United States
DATE-1915-20

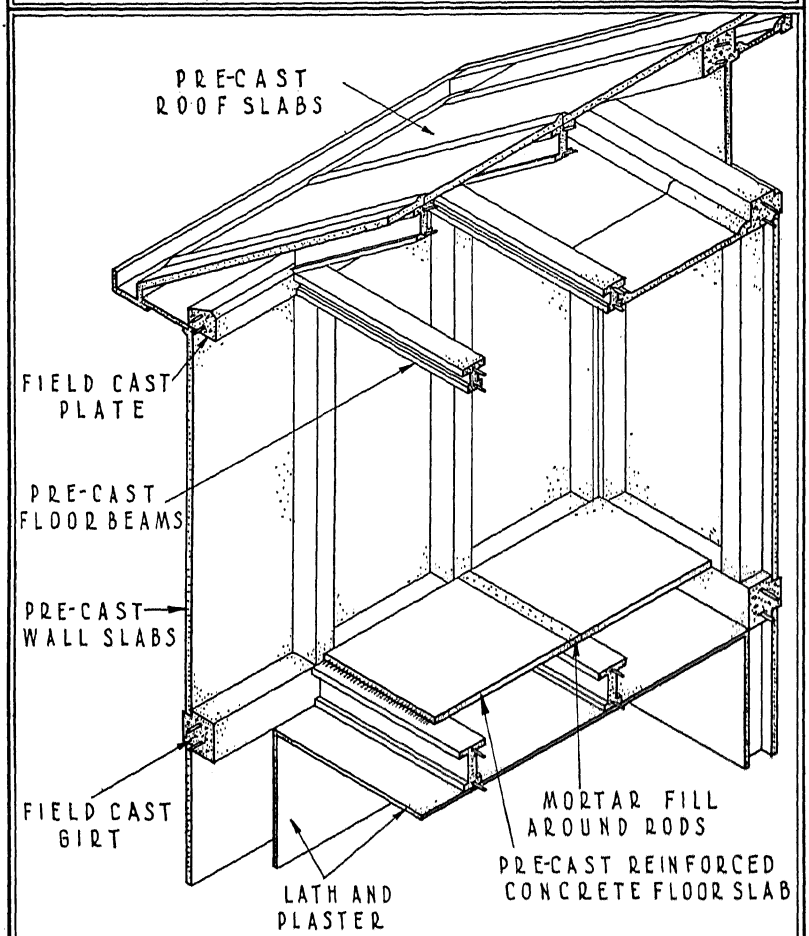

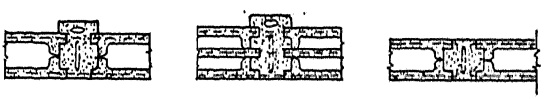

ALTERNATE WALLS

III

Simpson Craft

Type III. Pre-cast Unit

Sponsor: John T. Simpson

History. This is a complete house system of concrete, about 90 per cent pre-cast. Existing houses built by this system are reported to be giving excellent service. They include 8 dwellings in Canada; 10 at Lansford, Pennsylvania; 13 at Manheim, West Virginia, Martins Creek, Pennsylvania, and Cementon, New York. The Portland Cement Association estimates first use to have been about 1917. It may safely be placed in the period 1915–1920.

Structure. The system permits four different arrangements of pre-cast members, tied together by members cast in place.

(A) Pre-cast inside and outside wall slabs, floor beams and slabs, and ceiling slabs, with field-cast studs.

(B) Same as (A), except that lath and plaster replace the inside wall and ceiling slabs.

(C) Pre-cast studs and field-cast girts. Stucco on metal lath or other exterior such as brick veneer, or wood shingles or clapboards nailed to furring strips attached to studs. Floors same as (A).

(D) Pre-cast wall slabs and studs, field-cast girts at floor and roof levels.

The illustration shows a construction of type (B), using pre-cast, story-height wall slabs, sill and lintel courses, floor joists, and reinforced floor slabs, field-cast studs and girts, and either metal lath and plaster or pre-cast slabs for ceiling. The roof construction consists entirely of pre-cast slabs, joists, cornice slabs, and gutters.

Foundation walls are solid concrete, 8″ thick. The first step in erection is to set the first-floor beams into the concrete of the foundation, 40″ on centers, and the reinforced pre-cast floor slabs upon them. The forms for pouring the studs are channels, placed on both sides of the pre-cast wall slabs, the studs projecting from the wall on the outside to give a ribbed effect. The pre-cast sill

and lintel pieces are let into slots cut into the stud forms, and the edges of the wall slabs fit into grooves in the sill and lintel pieces. Plank liners are used for the forms, with bracing. Stud reinforcing units are set in position and wired. The second-floor beams are set and the stud forms are filled with concrete. Girt forms are set and poured, and the second-floor slabs placed. The work then proceeds as for the first floor.

The reinforcing rods in the floor slabs project, so that when the joints between slabs over the floor beams are filled with mortar, the rod ends are embedded and tie the floor system together. Wire "hairpins" for attaching metal lath are inserted through holes in the inside channel forms and cast in the concrete.

Comment. The sponsor reports that the contract price for 6 single and 2 double houses (10 units) complete was $30,000.

Bibliography. 50.

Stahlhausbau

Type IVa-V. METAL FRAME — SKYSCRAPER; AND PANEL

Sponsor: Deutsche Stahlhausbau-Gesellschaft, a subsidiary of the Vereinigte Oberschlesische Hüttenwerke Aktiengesellschaft

History. About 1928 the Vereinigte Stahlwerke, or German steel trust, began a serious attempt at exploitation of steel houses. Among the most promising of the systems marketed was the one put out by the Deutsche Stahlhausbau-Gesellschaft, located in Upper Silesia. Other schemes were used in the Cologne and Munich districts as well as in Berlin. For the most part they were employed not in detached housing but in connection with various Siedlungen, and a considerable number of buildings were erected in the years 1928–1929. In later years there has been a diminution in this activity.

Structure. A steel frame, of paired channels as studs, was erected on a concrete or tile foundation. These channels were separated by strips of wood. In the later developments, two layers of insulation were placed on the studding, one inside the flanges (interior of the building) and one outside. Steel plates bent into pan shapes, about 2 meters x 3 meters, were applied to the studs, using neither screws nor rivets but a piece of impregnated wood running horizontally along the back middle of the panel and keyed into the channel studs. Thus movement of plates was permitted relative to the studding, and difficulties of expansion and contraction were overcome. The interior walls were plastered, the plaster being reinforced over the metal studding by a layer of metal lath, expanded metal, or welded wire mesh.

Floors were framed either in steel or in wood. If in steel, precast concrete slabs keyed to the under flanges served as a form board on which a concrete fill could be placed. Roofs were generally conventional, in accordance with the practice of the country. A small Tee, not in contact with the metal studding, finished the exterior panel joints.

Comment. Condensation on the back of the plates in the early

STAHLHAUSBAU

TYPE Metal Frame-Skyscraper; and Panel
SPONSOR Deutsche Stahlhausbau-Gesellschaft
COUNTRY Germany DATE- 1928

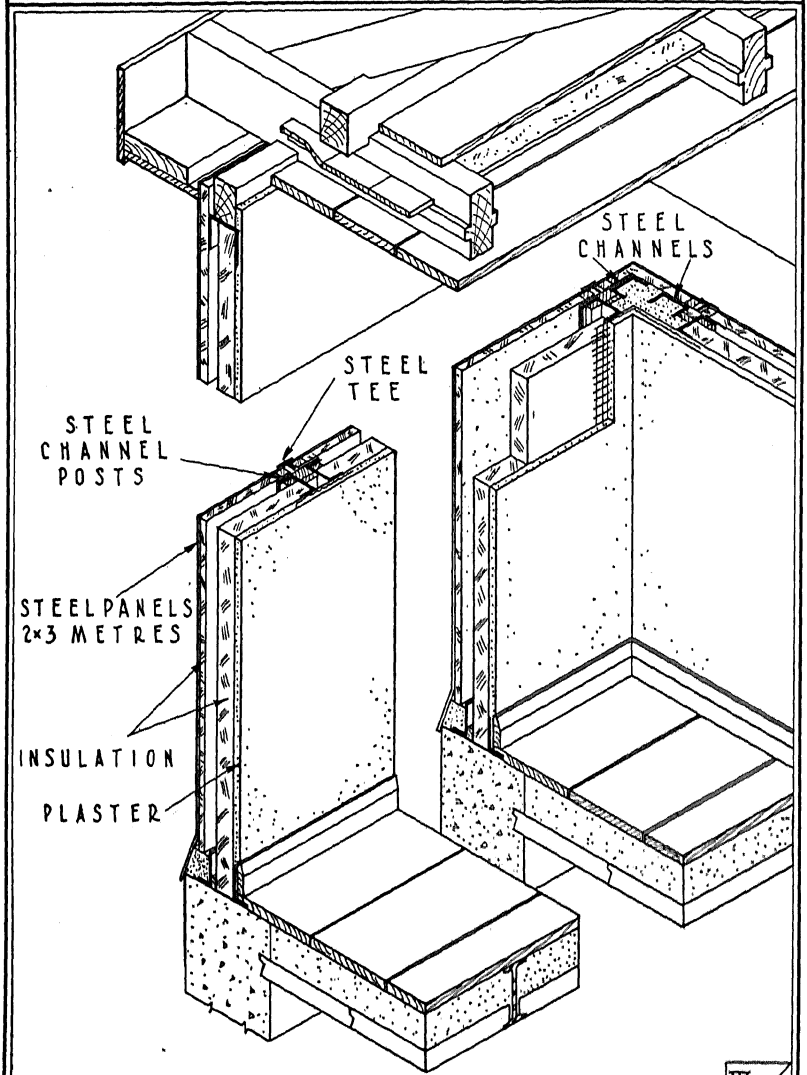

IVa
V

houses was eliminated in later demonstrations by insertion of the outer piece of insulation. The type of frame used was perhaps quite economical for buildings of the Siedlung type, where the several stories imposed loads of some magnitude on the studding.

Bibliography. 44, 47.

STEEL FRAME

TYPE Metal Frame-Close-spaced
SPONSOR Steel Frame House Company
COUNTRY United States DATE-1925-30

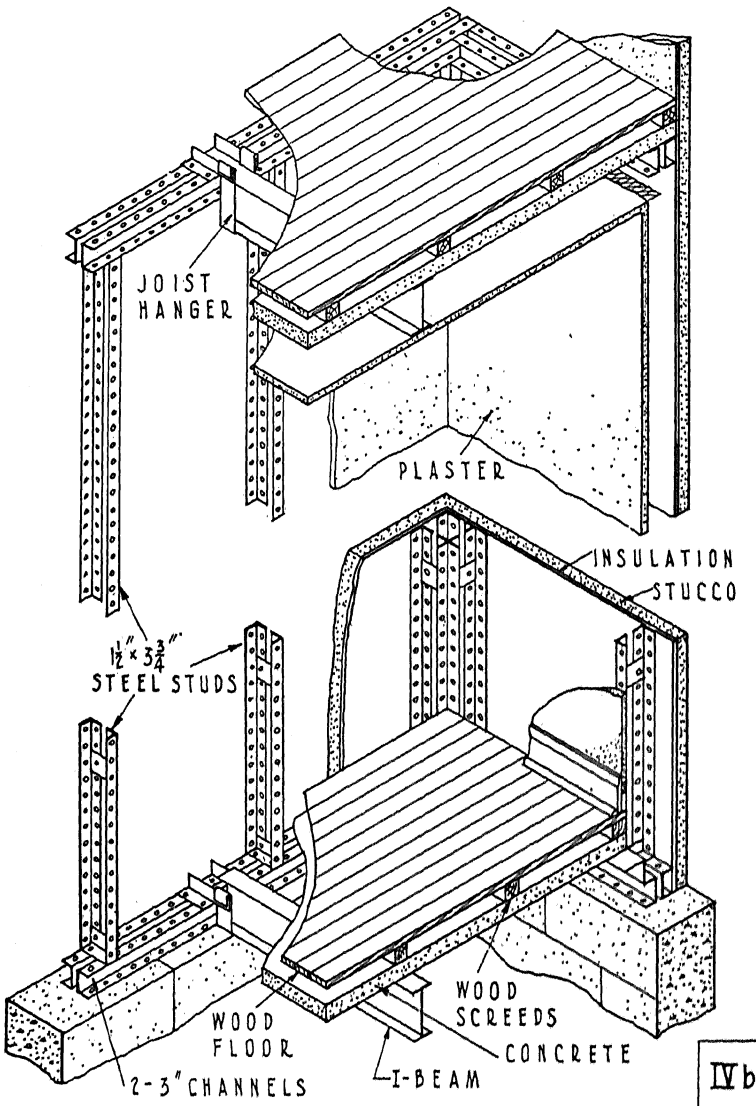

IVb

Steel Frame

Type IVb. METAL FRAME — CLOSE-SPACED

Sponsor: Steel Frame House Company

History. The Steel Frame House Company, Pittsburgh, was a subsidiary of McClintic-Marshall Corporation, organized to sell steel framing in conjunction with standard building materials. Previous to 1931 the company had built many houses and had selected representatives throughout the country to sell its product. It marketed both a frame of its own design and one acquired from the Broderick Firesafe Homes Association (see Broderick). The Steel Frame House Company has now been discontinued.

Structure. The frame here described is the sponsor's own design. Sills, girts, and plates consisted of pairs of 3″ channels placed back to back with space between them for passing anchorage, electric wires, or other connections. Studs, 16″ to 24″ on center, were pairs of 1″ angles with space between them. Floor joists consisted of 5″ or 6″ junior I-beams or channels spaced about 5′–0″ on center. Tie rods were used at the corners for diagonal bracing.

A special feature to facilitate framing connections was the punching of all members at regular 2″ intervals to take a ¼″ bolt. This permitted standard tie angles, one leg of which was bolted to the sill, girt, or plate, and the other to the inner legs of the angles forming the studs. The punchings were omitted on floor joists on the first and second floors, but attic-floor joists were punched to facilitate roof framing connections. Floor beams were connected to the girts by U-hangers and a clip that passed over the top of the girt and was then twisted at 90 degrees and bolted to the U-hanger.

The system provided for the addition of any conventional inside and outside finish, special clips being provided to secure metal lath or insulation board. The heat insulation was generally placed outside the framing. Subfloors of wood, nailed to wood sleepers, were covered with wood finish.

Comment. Through the punchings at uniform short intervals, the details of this framing system were carefully worked out to use a minimum of different parts and shapes. The variety of parts used in the rectangular portion of the structure was reduced, but some difficulty was found in framing a sloping roof without increasing the variety of parts required. No effort was made toward pre-finish.

Bibliography. 21, 40, 41, 44, 56, S.

Steel-Bilt

Type IVa. METAL FRAME — SKYSCRAPER

Sponsor: Steel-Bilt Homes, Inc. House designed by Myron T. Hill, Architect.

History. This construction was used in the residence of A. K. Moulton of Cleveland, and is clearly described in a publication of the Subsidiary Companies of the United States Steel Corporation, dated 1933.

Structure. A 3″ channel sill was set, web upward, on the foundation, and from it 3″ channel studs rose at a usual spacing of 3′–0″. When a 6′–0″ space was encountered, as in the case of door openings, 3″ I's were substituted for the channel studs. Studs adjacent to corners were braced by angles 2″ x 2″ x ¼″. The ingenious girt framing shown in the upper part of the drawing permitted carrying vertical services from floor to floor without interference by the girt. Floors consisted of channels, with furring channels spanning them to support metal lath for plaster. Hy-rib lath spanned the upper flanges of the channels and on this was concrete 2″ thick. The designers abandoned steel at the roof plate (at least in the case of a pitched roof) and framed the roof with wood rafters, sheathing, and slate. Inside the frame the walls were formed of lightweight Haydite blocks 3″ thick, and outside of 4″ brick veneer. The interstices of the wall were stuffed with mineral wool. The wall studs, girts, and sills were arc-welded into panels in the shop, and erected by welding.

Comment. (See McKay.) Like so many skyscraper frames, this by no means offers a completed house or any drastic departure from tradition. Perhaps because of this, the house, like most of the skyscraper types, appears to be unusually well built and substantial, and its chief defect would seem to be cost.

The house is magnificently strong, fireproof, and well insulated — altogether first-class. It makes no attempt to advance the cause of pre-fabrication. It requires masonry, welding, insulating, and concrete operations, to name only the major ones. All this does not

STEEL-BILT

TYPE Metal Frame - Skyscraper
SPONSOR Steel-Bilt Homes, Incorporated
COUNTRY United States
DATE-1930-35

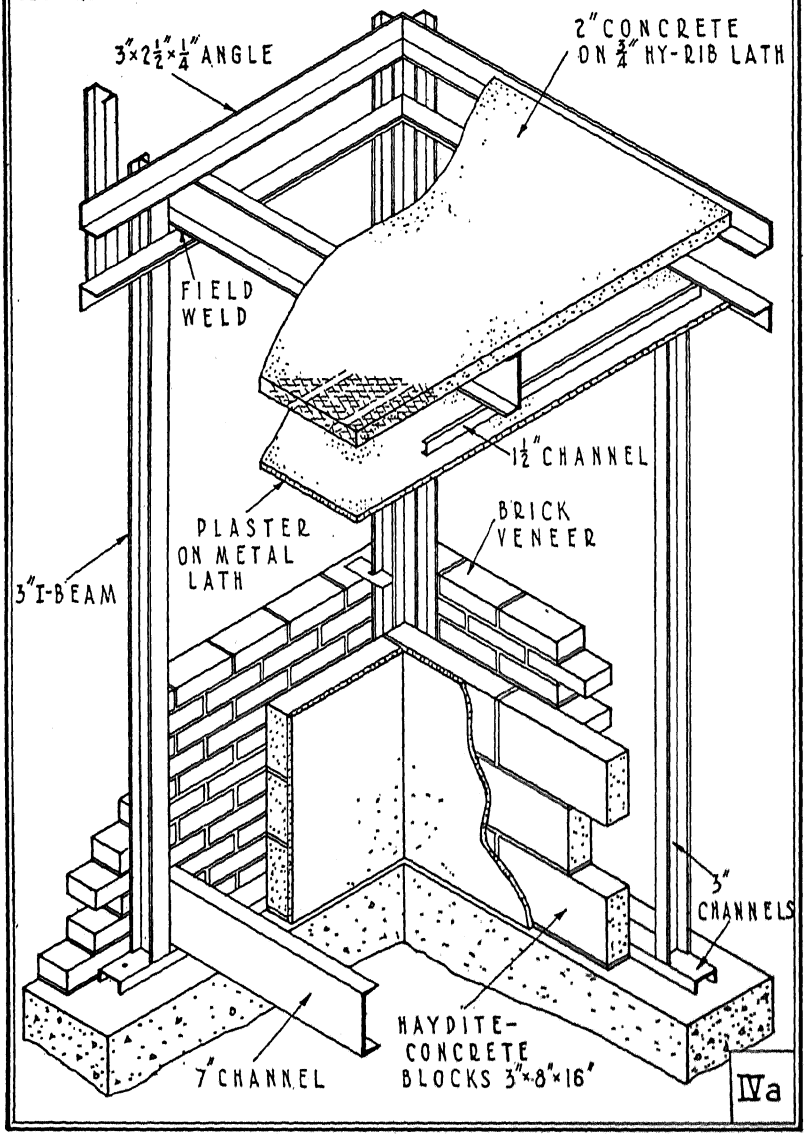

IVa

detract from the designer's accomplishment in building an excellent, though probably correspondingly expensive, house. Some attention has been given to provision of accessories without cutting and fitting.

Bibliography. 44, 62.

STEELMODE

TYPE Metal Frame - Close - spaced
SPONSOR Housing Company
COUNTRY United States
DATE - 1928

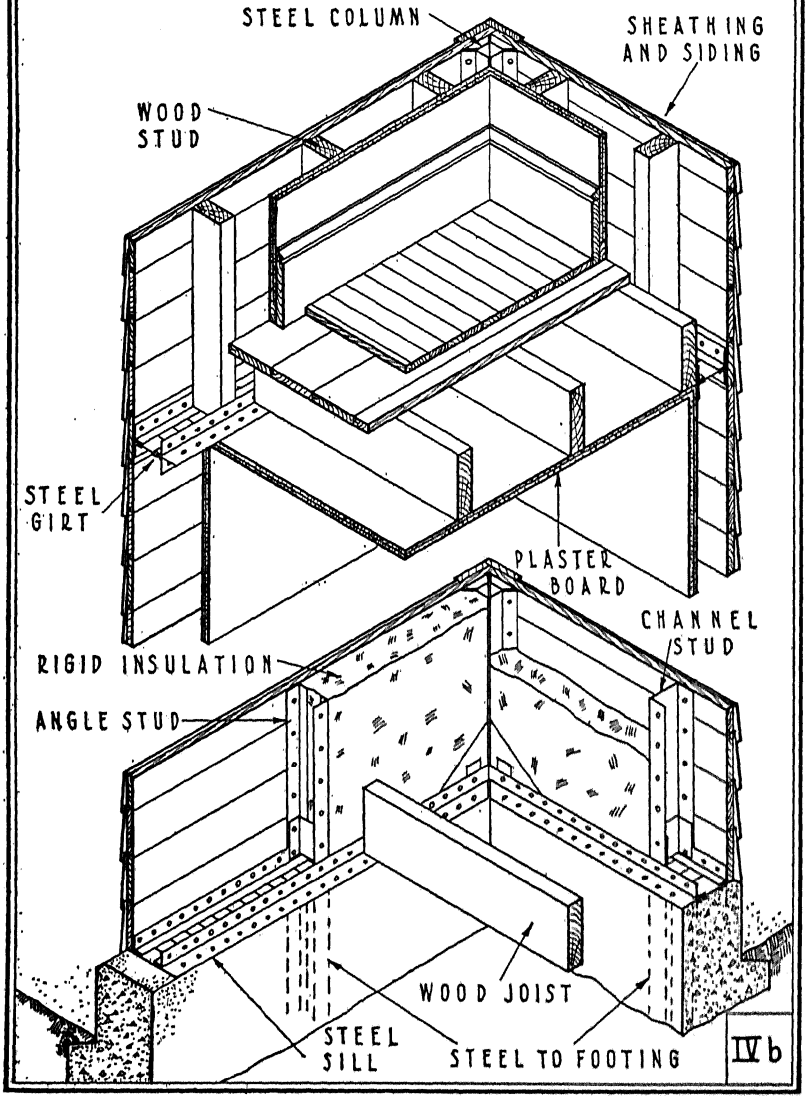

IV b

Steelmode

Type IVb. Metal Frame — Close-spaced

Sponsor: Housing Company

History. Like all of the Bemis designs shown in this volume, this system was sponsored by a subsidiary company, Housing Company. Like all the others, it was first tried out in the laboratory and then incorporated into one or more houses. In the case of the frame in question, two experimental houses were first built in Dedham and Wellesley, Massachusetts, in 1928, and sold to private owners in 1929. Subsequently (1929–1931) seven houses were built for definite customers in suburbs of Greater Boston. Since 1931 the decline in the house market has not made it feasible to sell further houses, but the system is still advocated to accomplish what it claims to accomplish.

Structure. When steel studs are used, Steelmode resembles many other closely spaced steel frames, but it was designed primarily to use wood studs, and to employ steel only at the points where the cross-grain shrinkage of wood would cause structural cracks. The upper of the two drawings illustrates the original purpose of this frame. The frame is made up of post and girt members, the post being made of four channel-shaped sections welded together into a star-shaped column, connected at floor levels to various types of girt sections. The girt sections are characterized by a horizontal web plate projecting beyond the flanges of the girt to receive floor or roof joists. The girt sections shown in the drawing are for an exterior wall; on an interior partition the web plates would project on both sides, and in certain types of partitions there would be no projection. Sill and plate members correspond roughly to girt members cut in half on a horizontal plane.

Girts are made up of four small angles and the central web plate which, in addition to its projecting ledge and the small holes thereon for locating and affixing joists, has larger central holes to permit the pouring of grout.

Characteristic of all the steel members in the structure is the

repetitive punching occurring at modular intervals in all the elements welded together to make up the separate members.

The remainder of the construction shown in the drawings is more or less conventional, but various types of panels, slab finishes, and the like can be and have been affixed to the Steelmode frame.

Comment. Although the Steelmode frame offers certain advantages in accuracy of pre-fabrication and very definite advantages in the elimination of cross-grain shrinkage of wood at undesirable points, it makes no pretension to being a solution of pre-fabrication. Nor does it claim to be cheaper than the wood it displaces. The use of Steelmode in a house adds very slightly to the cost, but not so much in the opinion of its sponsors as to offset the advantages gained therefrom. It is a step toward pre-fabrication.

Bibliography. S.

Stockade

Type II–III. Concrete Formed in Situ; and Pre-cast Unit

Sponsor: Stockade Building System, Inc.

History. James Monroe Hewlett, prominent New York architect and muralist, conceived the basic idea of Stockade some time prior to May, 1922. A patent on the construction was issued in 1923 and followed by others. Moves toward incorporation were made, and by 1929 Stockade Building System, Inc. was able to advertise that it had built many houses throughout the United States. There is no report of activity at the present time.

Structure. For designing purposes, Hewlett divided the wall of a house into two parts — the load-bearing, and the weather-resisting and insulating. He then proceeded to make the second part of light materials, and used them as a forming means for the first.

Stockade blocks were made of excelsior or other wood fibers cemented together into a lightly compacted bale, usually for wall purposes 8″ x 16″ x 4″, each block containing two cores 8″ on center, running vertically. Blocks were laid in the wall dry, with joints staggered and cores in register. Suitable reinforcing was introduced when desired and the cores poured with concrete, thus at once tying the blocks together and forming the structural posts or studs. At girt levels, slabs of the same material 8″ x 32″ x 2″ formed the poured and reinforced girts.

Walls were finished on the exterior preferably with stucco, but any suitable veneer could be used; interior wall finish was plaster. There was no effort to form floors or roofs by other than conventional wood-framing methods.

Comment. Each block was equivalent to eight bricks in volume but to about one brick in weight. A quoted cost for 1,000 square feet of laid-up wall surface for Greater New York and the New England States, without transportation, indicated that Stockade was slightly cheaper than frame, about two-thirds as expensive as concrete blocks, and only a little more than half as costly as common-brick or hollow-tile walls. The sponsors claimed that the

STOCKADE

TYPE Concrete Formed in Situ and Pre-cast Unit
SPONSOR Stockade Building System, Incorporated
COUNTRY United States DATE-1920-25

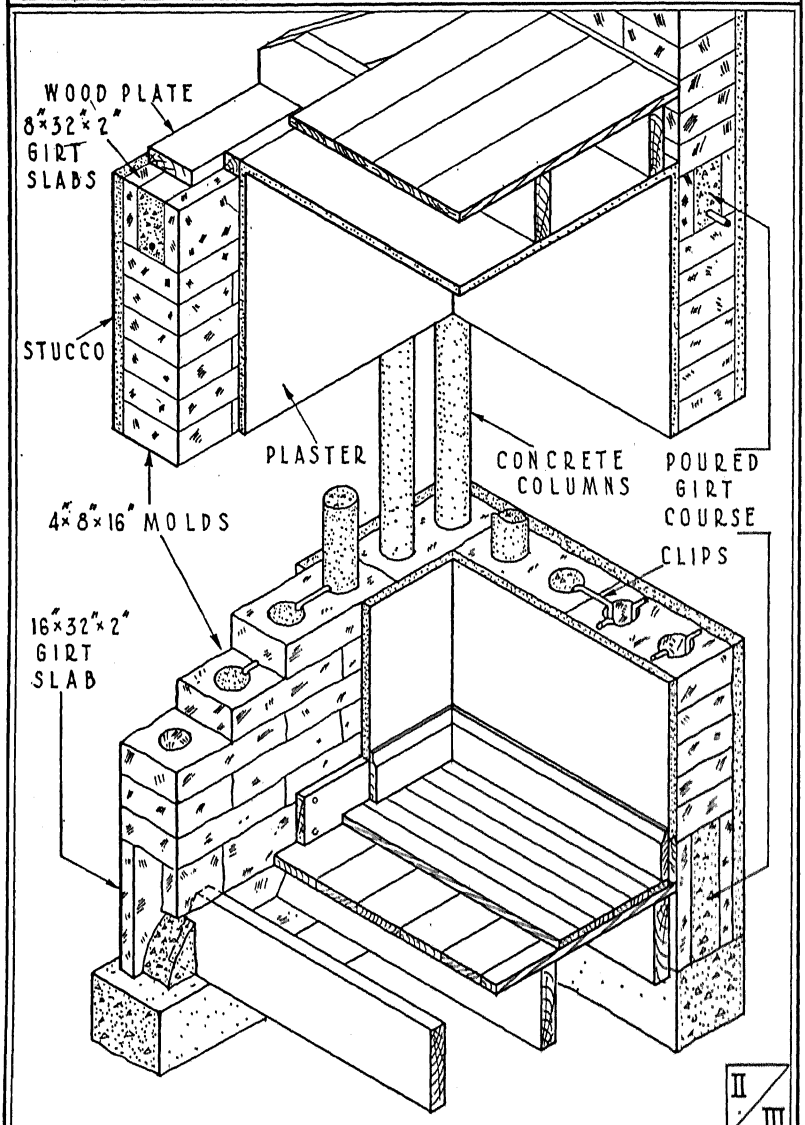

II/III

block was light, fireproof, moisture-proof, and soundproof, and had high insulating qualities; that vermin would be destroyed by the chemical binder; that the construction permitted deep reveals with consequent architectural beauty, a rough surface resulting in a beautiful stucco effect, and speed of assembly and erection.

Bibliography. S.

STRAN-STEEL

TYPE Metal Frame - Close-spaced
SPONSOR Stran-Steel Corporation
COUNTRY United States
DATE - 1933

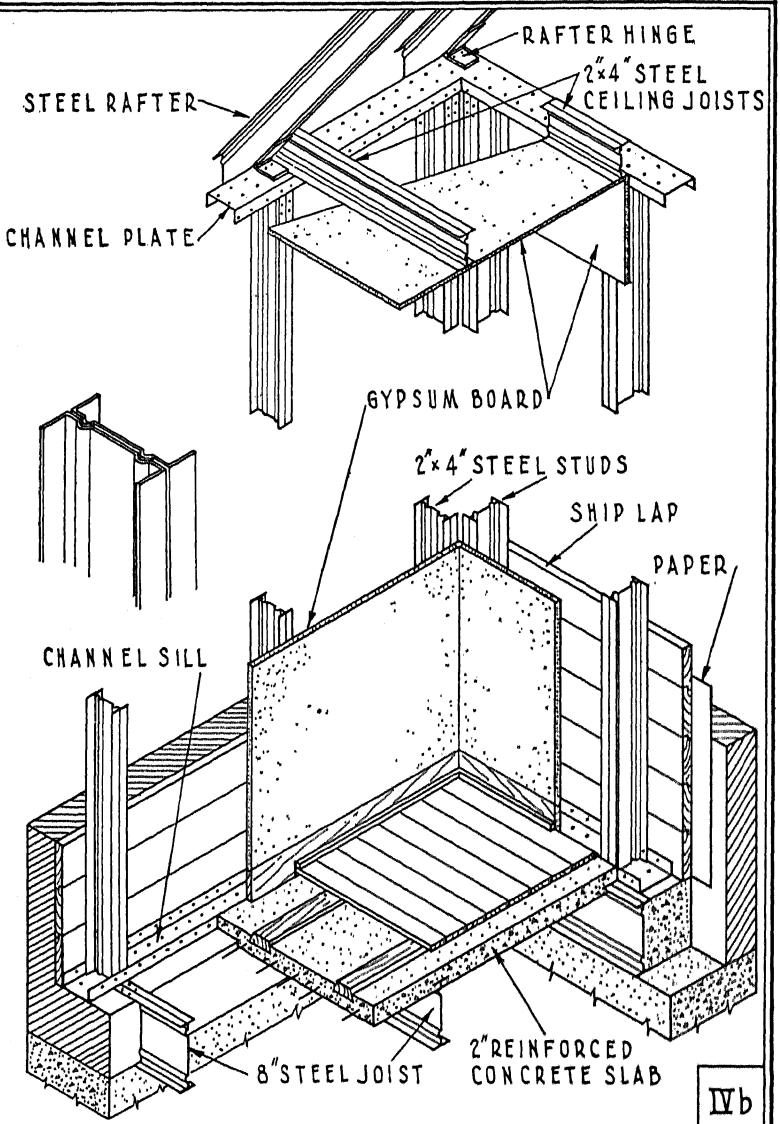

IVb

Stran-Steel

Type IVb. METAL FRAME — CLOSE-SPACED

Sponsor: Stran-Steel Corporation

History. The Stran-Steel house exhibited at the Century of Progress in 1933 at once evoked considerable interest, and a second house, in 1934, gave clearer expression to the intent of the sponsors. The first house, because of its Glasiron Macotta exterior slabs, did not make plain the fact that the sponsors really were selling only an unusual type of steel frame. The second house, in which conventional wood exterior finish was used in connection with a conventional architectural design, made that evident and it has been confirmed by later publications of the sponsors. There are a number of houses in the Detroit area framed in Stran-Steel, and the sponsors report a rapid growth in the use of their product during 1934. In Washington, D. C., alone, 31 such houses were built. A large department store in Philadelphia and one in San Francisco erected exhibition houses framed with Stran-Steel, both of which attracted wide public interest. In June, 1935, the company reported sales at the rate of a house per day.

Structure. The structure here revealed is in accordance with the latest details published by the company (1935). The upper part of the drawing shows the frame free-standing, and it must be remembered that this is the essential feature of Stran-Steel, and that to the frame wood siding, boarding, lath, gypsum board, etc., may readily be nailed.

The frame consists of 2″ x 4″ studs and rafters and 2″ x 7″ and 2″ x 8″ joists of variously gauged steel used on centerings of 24″. The sponsors state that Stran-Steel itself is strong enough to center at 48″ but that most collateral materials will not span much over 24″. All main members are so formed that a nailing groove runs lengthwise on two sides. The groove is sinuous in shape and nails driven in follow the shape and are thus clinched.

The example shown is a frame in conjunction with a brick-veneer exterior, with gypsum board nailed to the studding inside.

Details of interest are the manner in which the compression flange of the floor joist is embedded in a concrete floor at ground level, and the ingenious use of a hinge for connecting the rafters with the plate, thus providing readily for a considerable flexibility in roof pitch. As previously pointed out, other finishes may be attached to the frame. The sponsors have abandoned bolting, as the principle method of attaching parts of the frame to each other, in favor of self-tapping Parker-Kalon screws, while other parts are attached to the frame by means of the self-keying nail.

Comment. Parts listed in the sponsors' most recent book as now available are half-stud, narrow, channel plate, standard channel plate, narrow stud, standard stud, 7″ and 8″ joists in five different gauges, ridge plate, and various required brackets. This catalogue lists nothing but framing for sale. In a book of questions and answers the sponsors claim that Stran-Steel has overcome the basic difficulties encountered by previous steel frames, those of undue weight, necessity for skilled erectors, and dependence upon special attachments usually difficult to obtain, slow to attach, and ineffective. Stran-Steel, the sponsors state, has great strength as a function of shape rather than of weight or structural area, can be readily erected by carpenters, and all materials are nailed to it with sixpenny common to tenpenny box nails; they also state that the nailing has 25 per cent more grip than in ordinary wood and yet can be pulled with a claw hammer, and that very little cutting and punching is required on the job although some is usual. They suggest that the house may be made fireproof by the use of masonry walls, metal lath, and plaster; they scotch the often-raised question about lightning risk, claim high prevention of cracks as opposed to wooden construction; and state that the cost of erecting when done by a skilled contractor is little or no more than the cost of framing a similar structure in wood. They estimate that the completed house costs from 5 to 10 per cent more than the conventional type of construction, but feel that the increased cost is justified in view of increased quality and will be so recognized by the buying public.

Bibliography. 9, 12, 27, 28, 35, 50, 62, S.

Structolite

Type II. Concrete Formed in Situ

Sponsor: United States Gypsum Company

History. About 1925 this large industrial corporation brought out a booklet entitled "Structolite Homes," in which it advocated the use of poured gypsum in making a house. The booklet was illustrated by photographs of a number of houses under construction in New York State, principally in Mount Vernon, Cohoes, Garden City, and Yonkers. During the last few years the development has not been actively pursued, owing partly to the restricted volume of residential construction and partially to a policy, quite general throughout industry, of retrenchment of research during depression.

Structure. Far from being pre-fabricated, this is a thoroughgoing example of a poured-in-place house, the more usual Portland cement concrete being replaced by United States Gypsum Company's Structolite, which was used not only for exterior walls but for partitions and floor fill.

The system proposed no particular form of shuttering, but left that matter to the local builder's fancy.

Structolite was a gypsum product which was treated differently from plaster and was said to have a neat strength two and one-half times that of ordinary gypsum. In these houses it was mixed with light aggregates such as steam-coal cinders, blast-furnace slag, or even the heavier aggregates such as crushed limestone or gravel. It set much more rapidly than Portland cement, and since gypsums develop some heat on setting it was claimed that pouring could well be done in cold weather. The resulting wall was fireproof and soundproof. The sponsors claimed that for equal thickness it had an insulation value two and one-half times that of Portland cement concrete, one and one-half times that of brick, and slightly more than two and one-half times that of frame construction.

Although gypsum was claimed to be permanent, it was admitted that exterior surfaces had to be protected and the sponsors had an

STRUCTOLITE

TYPE Concrete Formed in Situ
SPONSOR United States Gypsum Company
COUNTRY United States DATE-1920-25

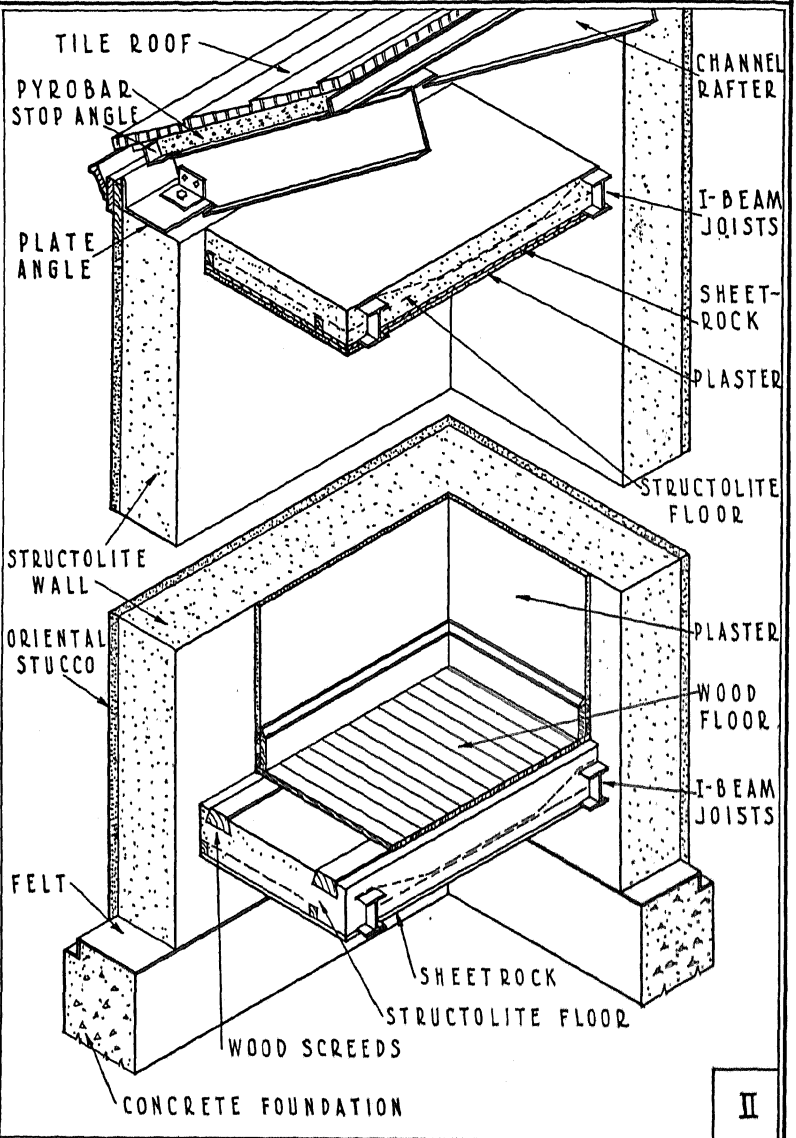

II

approved specification for damp-proofing and for the use of their Oriental Stucco. Methods were suggested for other exterior veneers. Interior walls were usually plastered with gypsum plaster.

The floor system consisted of I-beam joists of steel anchored to the poured walls. Gypsum wallboard with attached wood strips was keyed by the wood strips to the under flanges of the beams and served as a plaster base. The strips were further keyed in by the pouring of a Structolite floor around the joists. This concrete had a reinforcing mat of steel hanging from the top flanges of the beams to about mid-depth of the Structolite. The upper flooring was of wood, nailed to wood screeds set into the cast floor during the casting.

The roof was framed of steel channels resting on an angle plate. These rafters supported paired steel angles forming Tees, which in turn served to support and hold in place pre-cast gypsum slabs known as Pyrobar. A tile roof was then applied.

Comment. Without entering at all into the merits of the system, it may be said that this is a very pat example of an effort towards changed house design prompted by the wish to use as many materials of a given corporation as possible. With the exception of the wood screeds and floor, the steel, and the roofing tiles, every product used in the structure was made by the sponsors.

Bibliography. S.

SUPERIOR

TYPE Pre-cut Lumber
SPONSOR Superior Buildings Company
COUNTRY United States
DATE- 1931

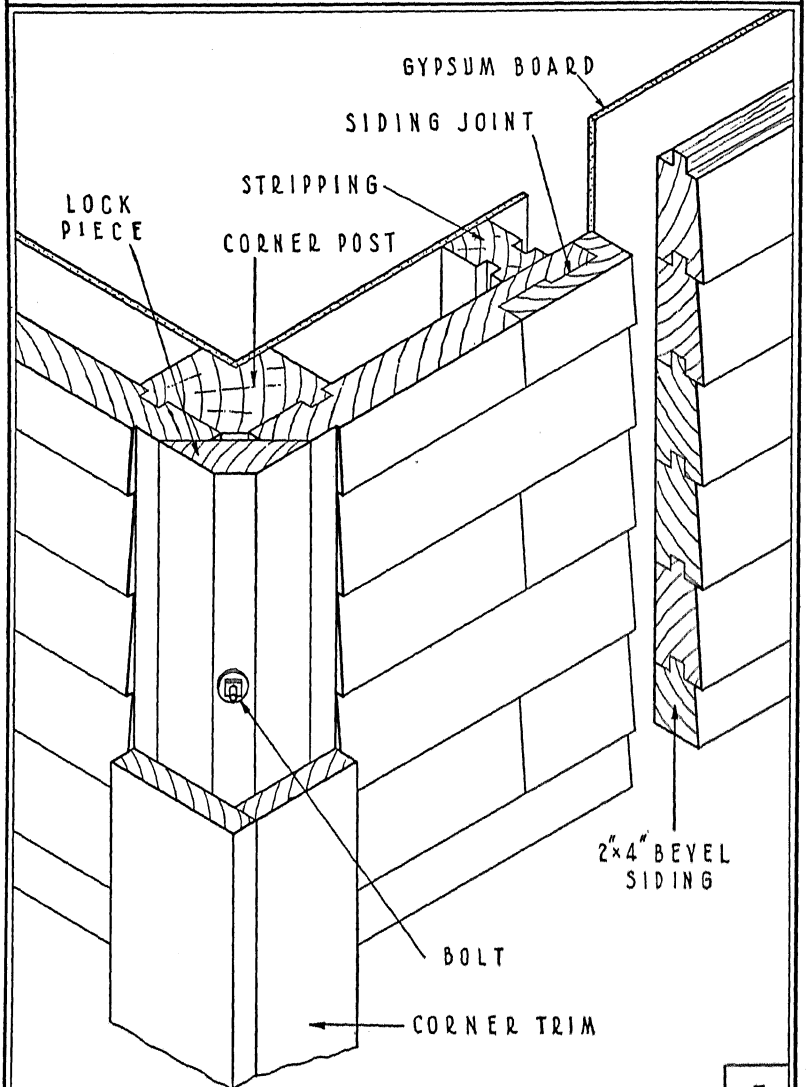

I

Superior

Type I. Pre-cut Lumber

Sponsor: Superior Buildings Company

History. In 1930, W. W. Loy and E. J. Crum patented a design for a wood house construction that included special provisions for handling the shrinking of wood. They commenced manufacturing and selling houses in 1931 and have continued in business during the years of depression, reporting that the number of houses sold has increased substantially each year. Their operations have so far been confined to the northwestern part of the United States, but they are planning to extend their territory to include the Middle West.

Structure. The construction is pre-cut wood framing. The special features are included in the wall design and in the method of carrying the roof load, the floors being of the ordinary wood-joist construction.

The main framing consists of substantial corner posts nailed to a box sill. The siding is a patented feature, consisting of horizontal beveled boards, grooved on their lower edges and tongued on their upper edges. When erected, the siding resembles traditional clapboards, or, as alternatives, log or rough-sawn " rustic " styles. The siding pieces are grooved vertically on their inner faces, near the ends, to take tongues that are provided on the corner posts. The ends are beveled on the outer edges and a corner lock piece, as shown in the illustration, is bolted to the corner post to hold the siding securely in place. The intermediate studding consists of stripping pieces, grooved on either side. The siding is keyed to the stripping by horizontal cleats, nailed to the inner face of the siding with the ends tongued to fit into the grooves of the stripping. The siding is thus secured to the framing by overlapping and tongue-and-groove connections and can move vertically as the wood shrinks or swells.

The roof is nailed to the siding and has no connection with the vertical framing. The roof load, bearing on the siding, presses the

boards tightly together and prevents any opening of the horizontal joints.

The sponsors claim that the siding alone provides a single wall that is air-tight and has been used comfortably in weather 40 degrees below zero. An alternative double-wall construction is also offered, as here illustrated, in which the interior wall finish is plaster board or other paneling nailed to the vertical framing. The wall panels, being attached to the vertical framing only, have no vertical movement.

Comment. This system is an ingenious method of taking care of the movement of wood due to moisture changes. Its advantages, in a part of the country where wood is abundant and where the climate gives special importance to the question of heat insulation and condensation, are obvious.

Bibliography. S.

SUSPENSION STEEL

TYPE Metal Frame-Close-spaced
SPONSOR Suspension Steel Concrete Company
COUNTRY United States DATE-1909

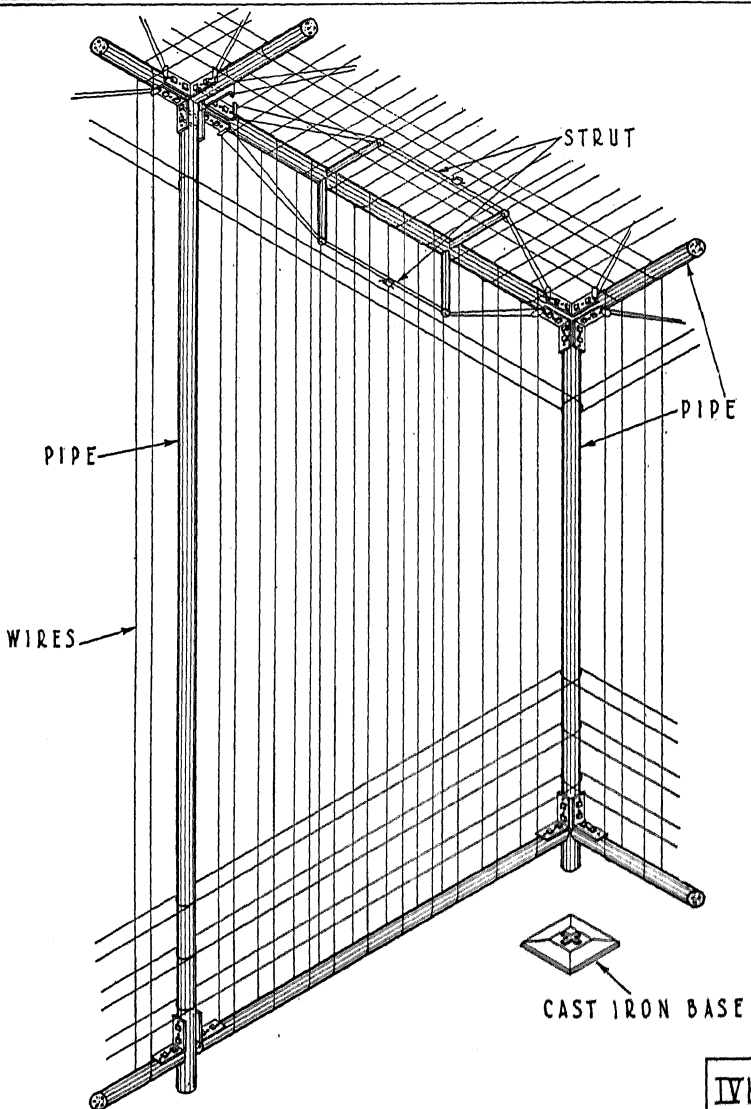

IVb

Suspension Steel

Type IVb. METAL FRAME — CLOSE-SPACED

Sponsor: Suspension Steel Concrete Company

History. A house was built by this system in Glencoe, Illinois, in 1909. Subsequently the construction is reported to have been used in some 35 buildings; few of these, however, were dwellings. It has apparently not been used recently.

It is not now possible to be certain as to all the details of the construction, and the system would not be shown were it not such an early effort and so different from almost anything else that has been attempted, at least in this country. It has a resemblance to some of the experiments of Hugo Junkers in Germany with structures based on the airplane principle of wire tensioning.

Structure. The basic frame consisted of pipes filled with concrete and joined to each other in the planes of walls, floors, and roofs by bolts through angle flanges. Around these pipes wire reinforcement was wrapped and tensioned so that in effect the whole wire and pipe structure was tight. Where wires went both ways from a pipe in any given plane, their tensions balanced and no bending reinforcement of the pipes was required. At outside girt levels in the horizontal plane and at the top-floor level in the vertical plane compensating tensions were not available and the pipes were reinforced against bending by struts of the queen-post type. After the frame was erected, metal lath or wire mesh was applied to the wires, always behind them (that is, the surface of the tensioned wires was nearer to the finished surfaces of walls, floors, or ceilings than was the mesh or expanded metal lath). Plaster and stucco were apparently applied to the various forms of lathing as required.

Comment. There seems little doubt that adequately tensioned wires as used would provide sufficient strength both in floor and in wall. The tensioning might be difficult to obtain. The frame should be light and cost would depend upon how good a wire was required in order to stand the tensioning.

Bibliography. 44, 56.

Swedish Systems

(IBO, Knivsta, Sesam, and Stadens)

In their general aspects these systems may best be considered together. Specific pages discuss specific structural details of each. In a sense the four systems represent, in the order named, an evolution in the art of building with wood.

Type V. PANEL

Sponsor: Various Swedish firms, such as Aktiebolaget Industribostäder (IBO), with aid from the municipal or national government

History. For many years, certainly since before 1911, the City of Stockholm has been interested in the erection of a surrounding ring of garden-cities. As time has passed, the degree of governmental subsidy has increased, and with it governmental interest in town and dwelling planning and construction. Wood is so definitely the chief building material of Sweden that pre-fabrication there has naturally concentrated on the use of wood. As early as 1926 the system IBO was being advertised, sold, and used. In subsequent years, Knivsta, Sesam, and Stadens were announced, and early in 1934 the latter was adopted by the City of Stockholm. Undoubtedly a great many more houses have been erected by these systems than by any pre-fabricated system in the United States up to the present time.

Structure. (Discussed specifically system by system.) Developments in the Knivsta and Sesam systems differ from the IBO not in general principle but in refinement of detail and simplification of panels. The unit of measurement throughout the schemes is one based on window and door dimensions.

Comment. The amount of wood used seems excessive when judged by American standards. It must be remembered, however, that traditional Swedish construction, employing continuous 2″ planking in place of our framed wooden building, always used more timber than ours. It is probable that some if not all of these sys-

tems actually use less wood than the traditional Swedish type. The pre-fabrication sought is not necessarily complete. Part of the government subvention program anticipates active physical cooperation by the people subsidized in the erection of their own buildings — a sort of local communism — and the use of labor not always skilled in building and of many levels of intelligence and dexterity limits the extent to which pre-fabrication may be carried. The houses are said to have been used successfully even in the arduous climates of Lapland and Spitzbergen.

The rather general use of sawdust as the insulation is part of an effort towards economical use of lumber. It utilizes waste from cutting into boards, plus short ends and pieces.

Bibliography. 14.

180

TYPE Panel
SPONSOR
COUNTRY Sweden

DATE-1920-25

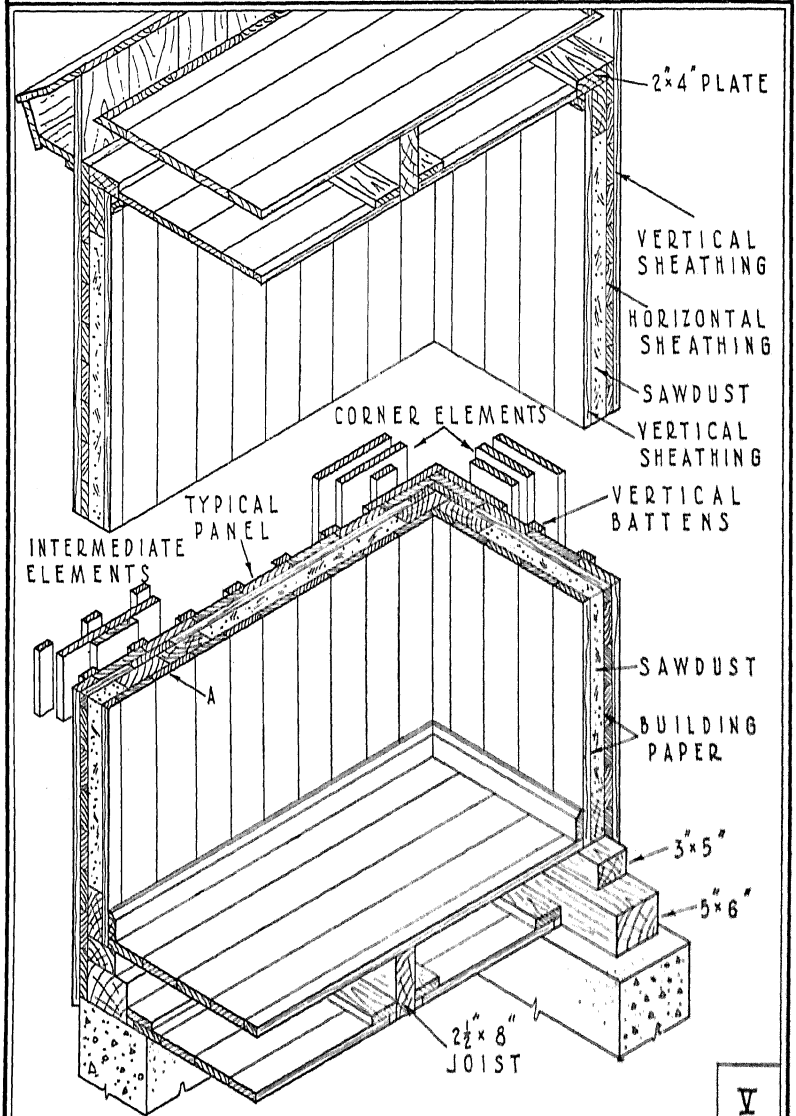

V

IBO

See Swedish Systems for Type, Sponsor, History, and Comment

Structure. Like all the systems described in this Swedish group, the IBO system is based on a panel of wood containing its own insulation of sawdust fill. Wooden interior finish is usual and satisfactory for walls and ceilings in Sweden.

The cross-section of a typical panel is best revealed in the broken-away portion of the wall sketch at A. The detail of the other edge of a panel would be reciprocal in profile with that indicated in heavy lines at A. The base member of the panel is a good-sized wooden stud, of the order of 2″ x 4″, turned with the narrow dimension across the wall. The panel is framed all around with such members. The first exterior facing is of horizontal tongued-and-grooved boards about 1″ thick; the interior, of similar boards vertically disposed. The space between these two layers, approximately 2″, is filled with sawdust as insulation, the inner faces of the boards adjacent to the sawdust being covered with building paper. The inner layer of boards forms the interior wall finish. A second layer of vertical boards is applied to the exterior horizontal layer. Each layer is set back on the edges from the underlying layer and from the studding, which therefore defines the extreme edges of the panel. The final exterior boarding of the panels is battened with narrow battens 1″ thick, and this forms the exterior finish.

Apparently, interfitting key pieces of unusual shape are needed to fill up the vertical joints between the profiles of adjacent panels. The cross-section of a typical key piece and of a corner are shown, both incorporated in the wall and pulled out therefrom.

A 2″ x 4″ plate, laid with the 2″ dimension vertical, caps the panels all around the rooms and supports floor joists approximately 2″ x 8″ which in turn support plank floors and ceilings. The ceiling is made of panels received between the joists.

KNIVSTA

TYPE Panel
SPONSOR —
COUNTRY Sweden

DATE-1920-25

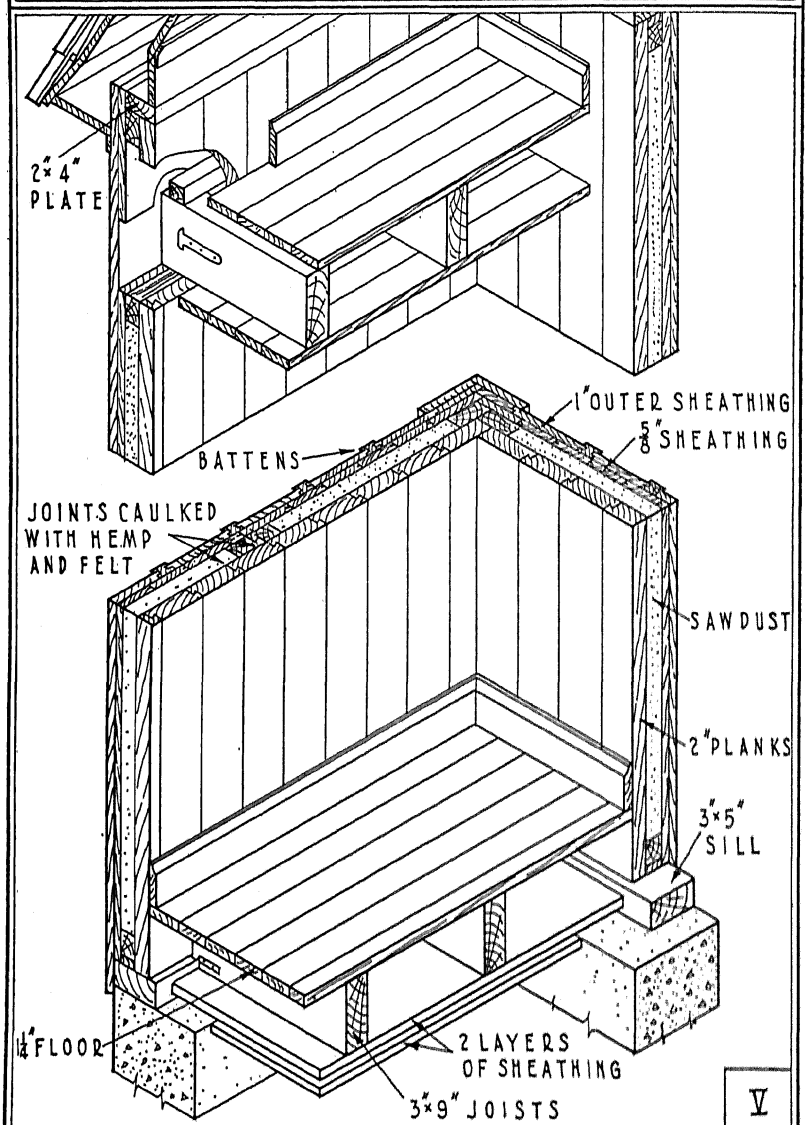

V

Knivsta

See also Swedish Systems and IBO

Structure. The general principles of the Knivsta system are like those of the IBO. The framing members of the panels (approximately 2″ x 4″ in the case of IBO) have been reduced in size, but the inside vertical sheathing is 2″ planking. Panels are half dovetailed to form an interlocking fit, and the necessary joints are caulked. A final layer of vertical sheathing is applied with battens after the structure is erected. The floor system is supported directly on the panels and the ceiling is fastened directly to the 3″ x 9″ joists instead of being keyed to them as in the IBO system. As the final sheathing is applied on the job, the elaborate joint key member of the IBO system is eliminated.

SESAM

TYPE Panel
SPONSOR —
COUNTRY Sweden

DATE - 1920-25

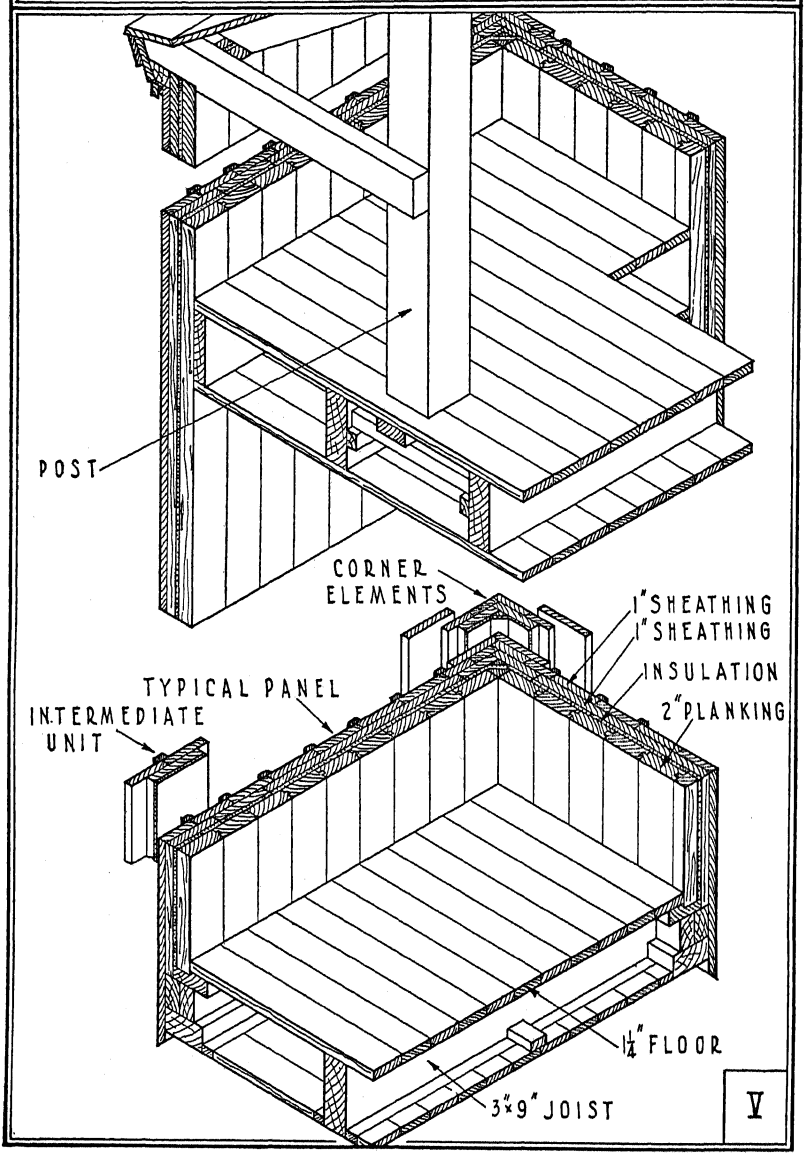

V

Sesam

See also Swedish Systems, IBO, and Knivsta

Structure. The Sesam system represents a return to most of the principles of IBO, with less change than in Knivsta. Some form of semi-rigid insulation is used, and the exterior horizontal sheathing of the panel is nailed directly to the interior vertical sheathing (2″ thick, as in Knivsta), thus eliminating altogether the stud framing of the IBO and Knivsta panels. The joint thus formed requires the use of intermediate panels similar to, but simpler than, those of IBO.

STADENS

TYPE Panel
SPONSOR —
COUNTRY Sweden

DATE-1920-25

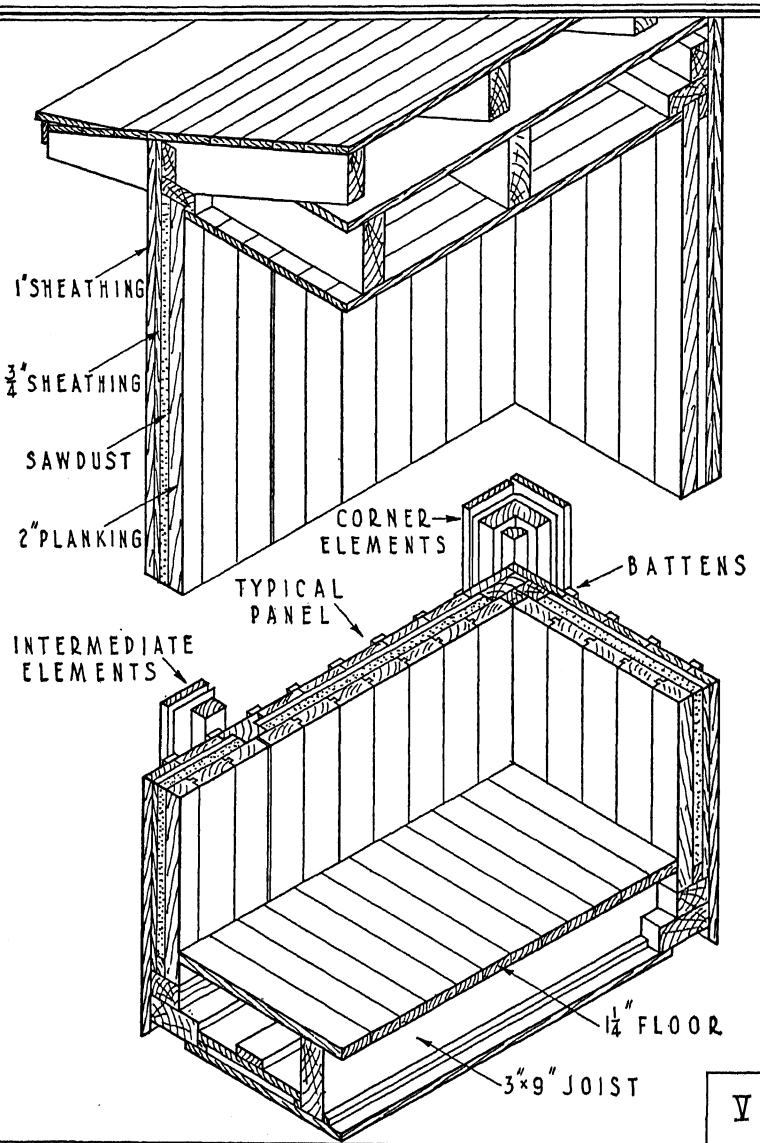

V

Stadens

See also Swedish Systems, IBO, Knivsta, and Sesam

Structure. The latest of the Swedish systems is an advance on IBO and Sesam. The three layers of planking are retained. The inner layer is 2″, as in Sesam. The insulation is loose, as in IBO. This in turn requires a stud framing of the panel, as in IBO and Knivsta, but the stud has been made much smaller even than that of Knivsta. The intermediate element of IBO and Sesam is retained, but it is simpler even than in Sesam and smaller.

Floor systems are shown both with and without the keyed ceiling panels of IBO.

It is doubtful whether the Swedish practice, the culmination of which is represented by Stadens (officially adopted by the City of Stockholm), can undergo much more simplification or evolution unless it becomes possible to lighten the panel by decreasing the thickness, say, of the interior vertical sheathing.

TAPPAN FRAME

TYPE Metal Frame - Skyscraper
SPONSOR Robert Tappan
COUNTRY United States
DATE - 1927

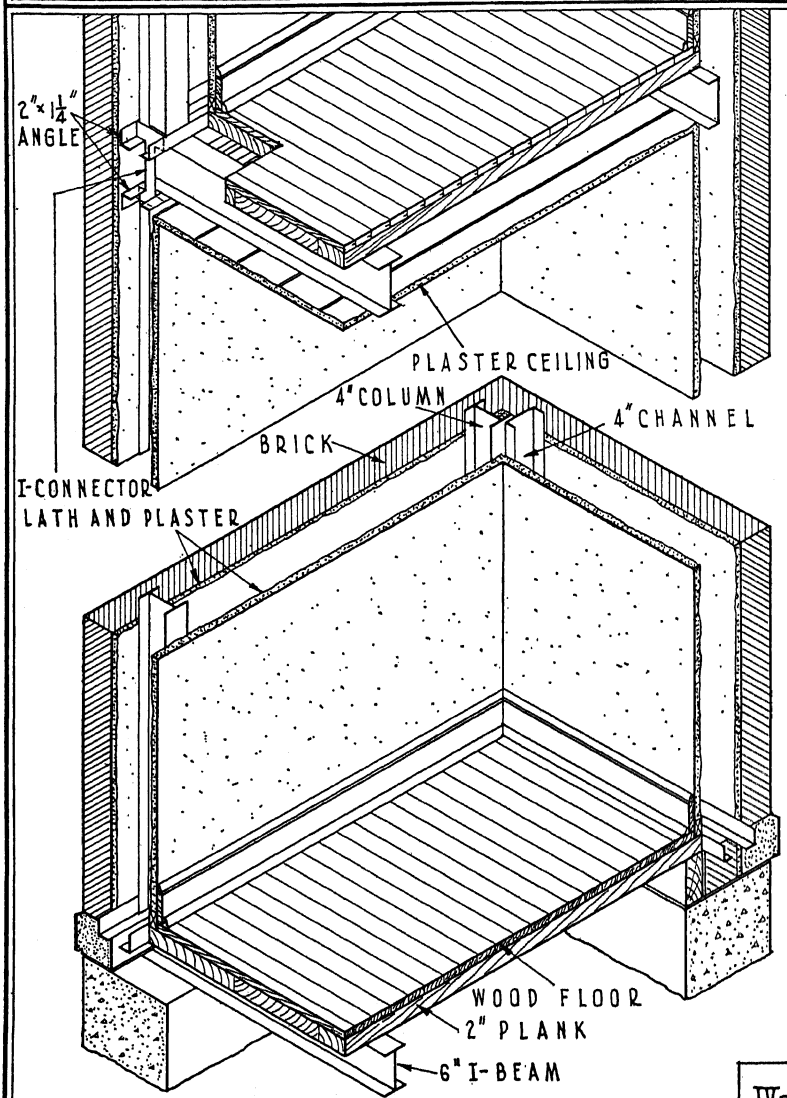

Tappan Frame

Type IVa. Metal Frame — Skyscraper

Sponsor: Robert Tappan

History. Robert Tappan is a prominent New York architect with a large and successful experience in the housing field. For more than twenty years he has been actively interested in the problems of reducing housing costs by improvements in construction, design, and organization. His aim has always been toward mass-production methods. In 1927 he built a steel-frame house at Forest Hills, New York, the details of which were published and received much favorable comment. Since then he has constructed three steel-frame experimental buildings at East Hampton, Long Island.

Tappan's interest has not been limited to the steel-frame house — see Tappan Unit.

Structure. The framing of the exterior walls, interior partitions, and roof trusses was assembled on the ground, placed in position by hand, and bolted together. Side wall sections were two stories high. End walls were one story high with the ends of the second- and attic-floor beams placed between them. Partitions were one story high.

Wall and partition sections consisted of 4″ I-beams on 4′–0″ centers. These had a sill and top plate of two 2″ x 1¼″ x ¼″ angles. The ends of the I-beams were held between the upright legs of the angles by four bolts. The sills and top plates were connected by I-shaped pieces of steel, one on each side of each floor beam, the ends engaging the horizontal legs of the angles. Floors were supported by 6″ I-beams, 4′–0″ on centers.

Interior wall and ceiling finish was metal lath, clipped to the beam flanges, and plaster. Floors were 2″ wood plank covered with a wood finish floor. Outside of the framing was similar lath and plaster with brick siding. The system provided for heat-insulating material as needed outside of the steel structure, but none was shown for this particular house.

Comment. While the system was similar, structurally, to many

wide-spaced steel-frame houses, the design was ingenious in using only standard shapes in a way to facilitate rapid erection. There seems to have been little innovation in the application of materials and finish to the framing. Tappan patented the framing connection in 1927, covering also an alternative means of bolting the sills, top plates, and I-beams together without the I-shaped plate.

After long experience in steel-frame houses, the sponsor expresses his belief in this type of construction. Also, he believes that the steel skeleton for an economical house should start at the cellar floor, and that the enclosing walls (and floors) should be constructed by hand labor at the job, using any one of several good and readily available materials. He admits that with quantity production, on highly standardized small buildings, pre-fabrication might show a saving as against field work.

Bibliography. 33, 36, 44, 56, 63, S.

TAPPAN UNIT

TYPE Panel
SPONSOR Robert Tappan
COUNTRY United States
DATE - 1925-30

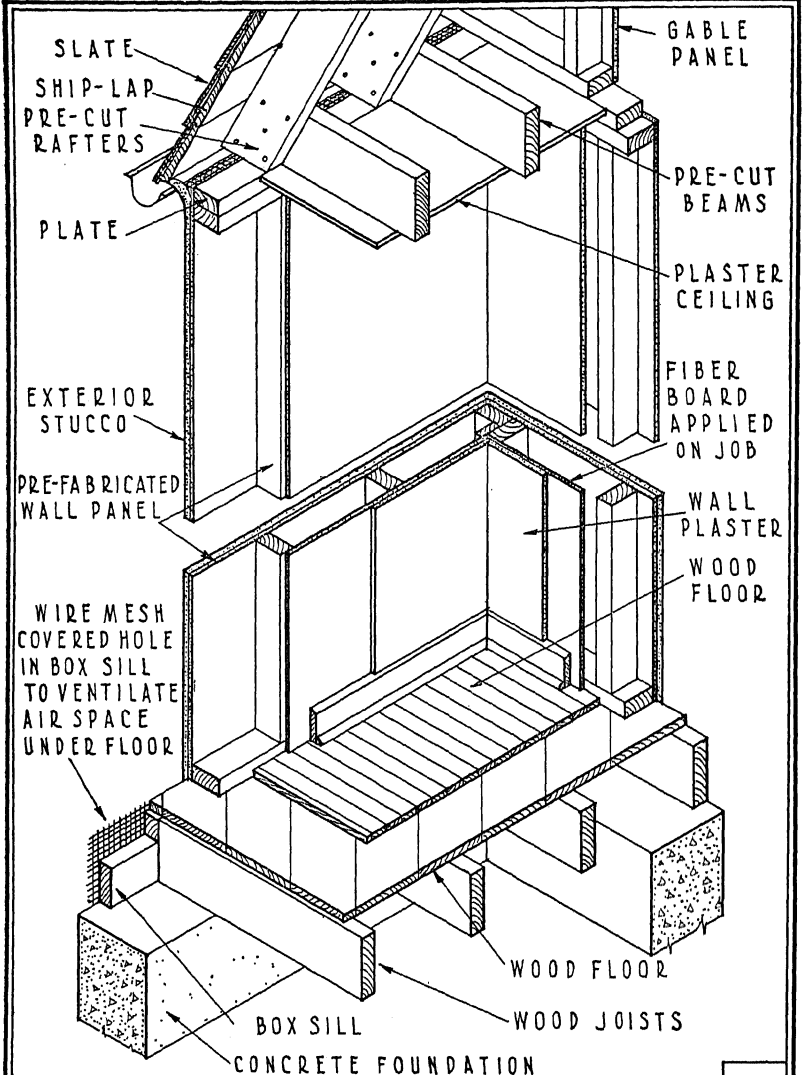

V

Tappan Unit

Type V. PANEL

Sponsor: Robert Tappan

History. For an account of Tappan's interest in housing, see Tappan Frame. As contrasted with his frame system, the unit system is based on pre-fabricated wood panels. A group of small unit houses were built at Montauk, Long Island, and a few other residences in the vicinity of New York have used this construction.

Structure. The box-sill type of floor framing was placed on the foundation, with holes cut at intervals in the sills to ventilate the air space between the first floor and the ground. These holes were covered with wire mesh. The framing was covered with rough flooring of ship-lap, nailed diagonally, to form a level platform on which both outer-wall and partition panels rested.

The wall panels were fabricated at the factory, 4′–0″ wide by 7′–0″ high, consisting of ordinary studding with horizontal framing pieces top and bottom, and covered with wood sheathing. The units were erected by spiking through the marginal framing to the floor platform, the adjacent unit, and the top plate. Splines were also used between wall units to insure correct vertical alignment. Gable panels were erected in the same way. Ceiling joists and rafters were pre-cut.

Any exterior wall finish could be used, though Tappan usually wrapped wire lath around the walls and applied stucco. Interior finish was conventional, but excellent results were claimed for plaster directly on fiberboard wall panels.

Comment. The sponsor states that four carpenters can handle the shop fabrication of the panels and pre-cut pieces, and that the same four, with two helpers to carry, can do all the erecting. A four-room bungalow, excluding finish, was erected with such labor in two days. He asserts that year-round employment for labor is possible, even with operation on a moderate scale.

Bibliography. 4.

TEE-STONE

TYPE Pre-cast Unit
SPONSOR Tee-Stone Corporation
COUNTRY United States
DATE-1920-25

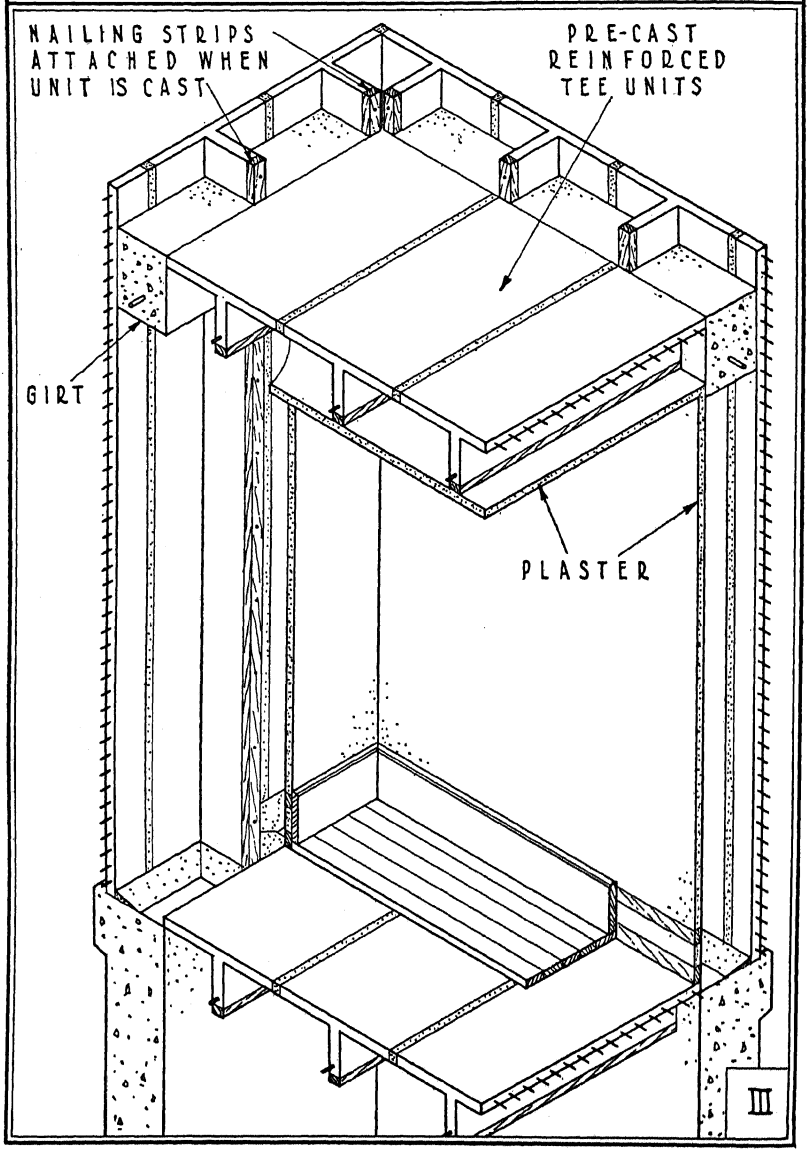

III

Tee-Stone

Type III. Pre-cast Unit

Sponsor: Tee-Stone Corporation

History. This system was developed by Joseph Winston of the Tee-Stone Corporation, and is patented in this and other countries. Dwellings have been built by this construction method at Amity Harbor, Manhasset, and Malba, Long Island, and in a few other locations. A large quantity of the units was used in the Colosseum at Starlight Park, New York. The Portland Cement Association estimates first use to have been about 1923. It may safely be placed in the period 1920–1925.

Structure. The basic T-shaped pre-cast unit of reinforced concrete, used for both wall and floor construction, has a flange 16″ wide by 1¼″ thick. The stem is about 6″ deep and 1¼″ to 1½″ thick, and has a nailing strip attached when the unit is cast, giving a total depth of 7″ to 8″. Reinforcing is supplied by a tension rod inserted in a hole provided in the stem and by horizontal bars in the flange. The horizontal bars are tied to the tension rod by 12-gauge wire, the ends of the wire projecting at the flange edges.

Units may be cast on the job, but are preferably pre-cast in a central plant. Molds are of wood, set in gangs.

The outside wall units are either one or two stories high, 8′–0″ to 16′–0″ in length, and are erected by a small crane. Lower ends are set in a groove in the foundation and are mortared in securely. Reinforced concrete girts at floor and roof levels tie the sections together. Vertical joints are filled with mortar, embedding the projecting ends of wire.

The floor units may be installed either side up, but for most efficient use structurally the stem should be down so that the tension rod functions properly.

Exterior finish is generally stucco. Inside wall finish is lath and plaster, with or without insulation board. Ceiling lath and plaster are applied to the furring strips. Sleepers for nailing on wood finish flooring can be secured to the flange at the time of casting.

Comment. This system has the advantage of dry construction, avoiding delay in installing kiln-dried wood finish. Theoretically the shape of the unit makes efficient use of the structural properties of reinforced concrete. However, the heat-insulation value of air spaces in the wall is largely destroyed, since the spaces are so wide as to permit the free convection circulation of the confined air. Superior quality and reduced cost are claimed, by use of a factory-controlled uniform mix and semi-automatic mechanical handling, and by curing under proper atmospheric conditions.

Bibliography. 50, S.

Telford

Type V. PANEL

Sponsor: Braithwaite and Company, Engineers, Ltd., West Bromwich, Staffordshire, England

History. This system was invented by J. C. Telford, General Manager and Director of the Braithwaite Company. It was eligible for the subsidy under the Acts of 1923 and 1924, and enjoyed relatively high popularity among " alternate " systems during the years of the housing shortage in which the subsidy was fully effective. Apparently no houses have been built for several years. (See British Systems.)

Structure. The building was started from a concrete raft platform laid on a leveled site and projected 2′–0″ beyond the outer wall line. Templates in the forms provided locations for anchor bolts, which served to fasten the bottom flanges of the first tier of plates. These plates were made of steel about ⅛″ thick, of story height, and about 4′–0″ wide, bent around the border to form flanges roughly 3″ wide, thus producing a panel about 3′–6″ wide. The flanges were bolted together at the vertical joints. The walls of the first story were capped by a horizontal steel stringer course, of the section shown in the drawing; and second-story panels were then erected after the second-floor beams were placed. Thus the framing resembled platform construction. A roof, usually of steel plates similar to those of the walls but alternatively of conventional construction, was then applied. After the exterior walls and roof were erected, 2″ x 2″ wood studding was fixed inside an intermediate lining and brass screws were used to fasten asbestos sheets to this framing, the joints being covered with wooden battens. The steel wall plates were pre-finished in the factory by painting them a warm stone color and sprinkling them with sand while wet. Floor joists were composite members about 8″ deep with a central web of thin steel and faces of wood. A composition panel ceiling was attached to the under side of the joists, a wood floor on top of them. Creosoted screeds pre-set in the concrete of the first floor served

TELFORD

TYPE Panel
SPONSOR Braithwaite and Co., Engineers, Limited
COUNTRY England
DATE-1920-25

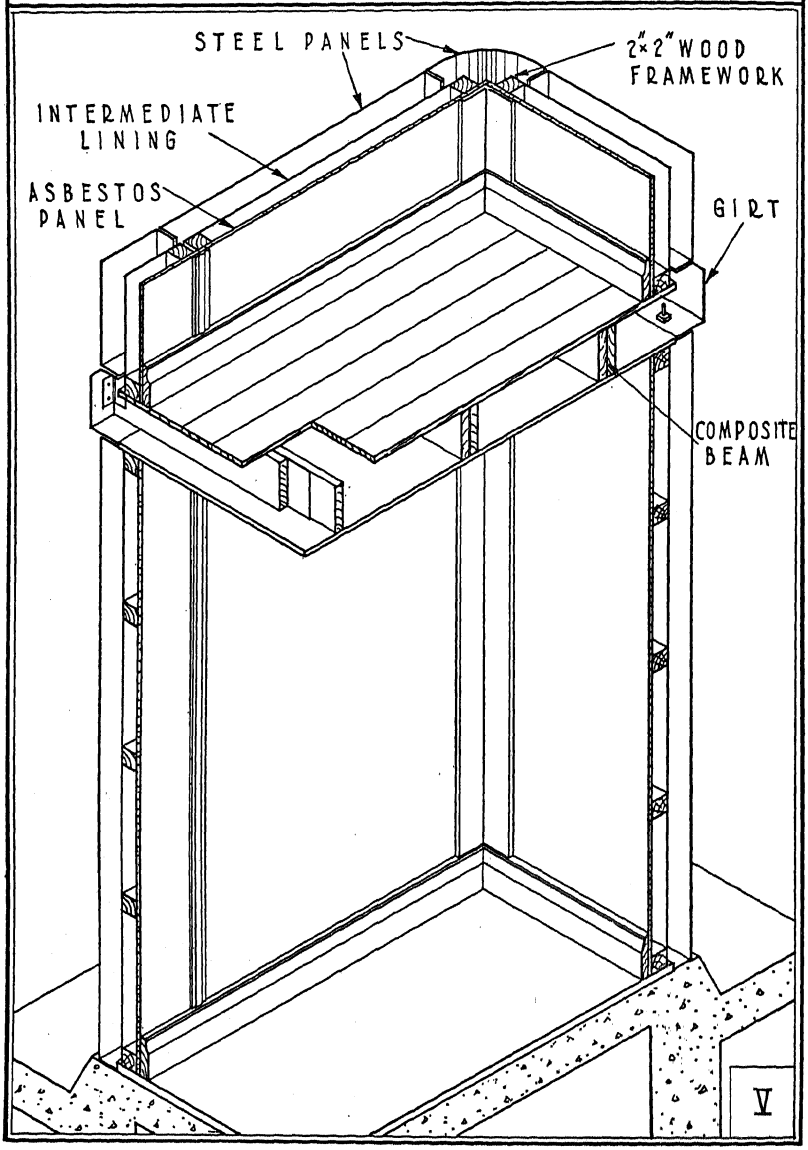

V

for nailing first-floor boards, creosoted on the under side, or a composition or granolithic flooring was used. Windows were steel casements in wood frames, doors were of wood, and chimney breasts of steel with flues of cast iron. (See General Houses.)

Comment. The structure contemplated a form of heating by using the walls, and this was patented. The air space between the asbestos sheets and the outer steel sheets was carried to the roof and into contact with the exterior lining of the cast-iron flues so that heat from these flues was supposed to be uniformly transmitted throughout the wall cavity. The sponsors claimed erection with unskilled labor in about three weeks, and forty-year life if the steel was kept painted. Every part shipped was marked to agree with a key plan. Moreover, there was a considerable degree of pre-fabrication, as pipes for water, gas, and electricity were fixed to the plates and needed only to have connections screwed on. Condensation was said to be avoided by the inner lining and by circulation in the cavity of the walls. Critics in England said that the nature of the construction cramped architectural freedom, but the sponsors held that this was not so.

Bibliography. 41, 42, 43, 44.

UNIVERSAL

TYPE Panel
SPONSOR Universal Housing Corporation
COUNTRY United States DATE-1933

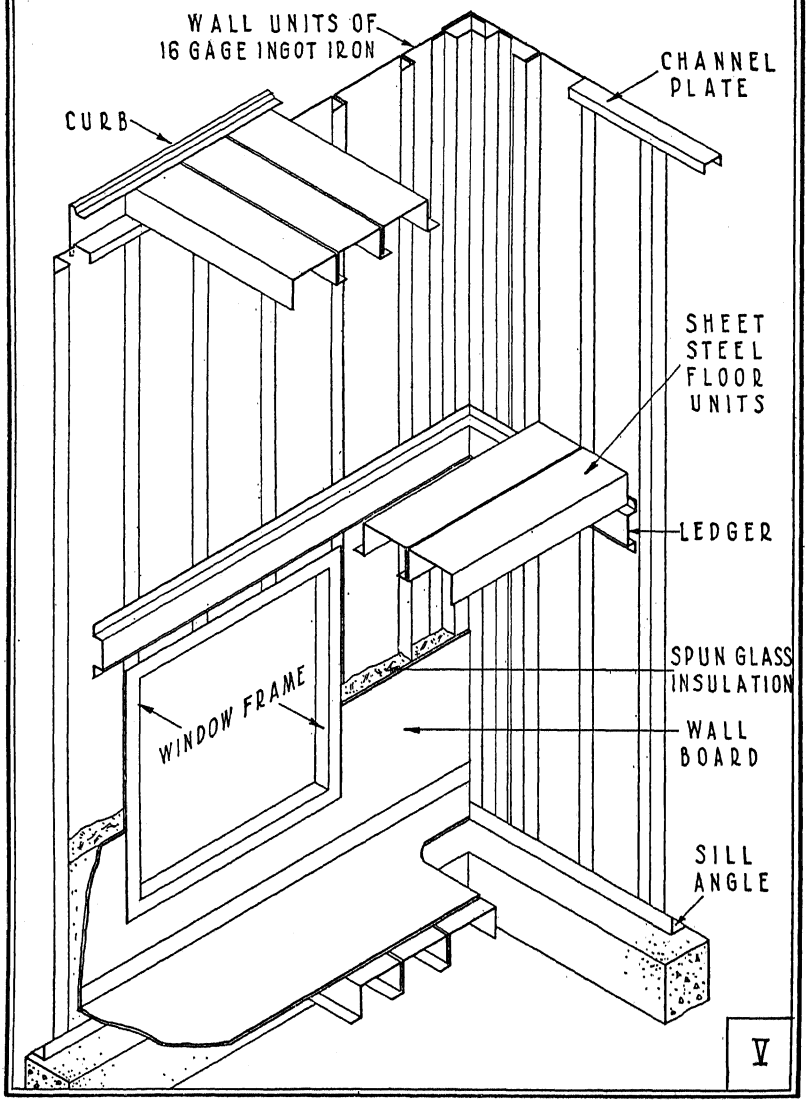

V

Universal

Type V. PANEL

Sponsor: Universal Housing Corporation, Zanesville, Ohio

History. It is the announced policy of this corporation to produce houses for low-income families. In 1933 an experimental house was erected in Ohio. The first house was built with a tubular frame, but the frameless system shown here has subsequently been developed. We have no record of further construction.

Structure. (Compare with Armco, Ferro-Enamel, and Wheeling. The Universal system is somewhat simpler than these.)

Exterior siding panels of 16-gauge ingot iron are bolted together, and to a frame of the type shown, through their flanges. The iron, treated with enamel paint, serves as the exterior finish. Units made by American Rolling Mill are used for floors and roofs; ultimately these will be assembled in large sections in the factory. Window sash, frames, and bucks are of steel, doors and trim of wood. The subfloor is gypsum board with wood or mosaic-tile finish. The roof is of built-up asphaltum over ½″ insulating board. Insulating board is also placed against the panels on the inside as finish, after treatment with plastic paint. The space between wallboard and metal siding is filled with spun glass for further insulation.

Comment. None.

Bibliography. 28.

V. D. L.

TYPE Pre-cast Unit
SPONSOR Van der Leeuw
COUNTRY United States
DATE - 1934

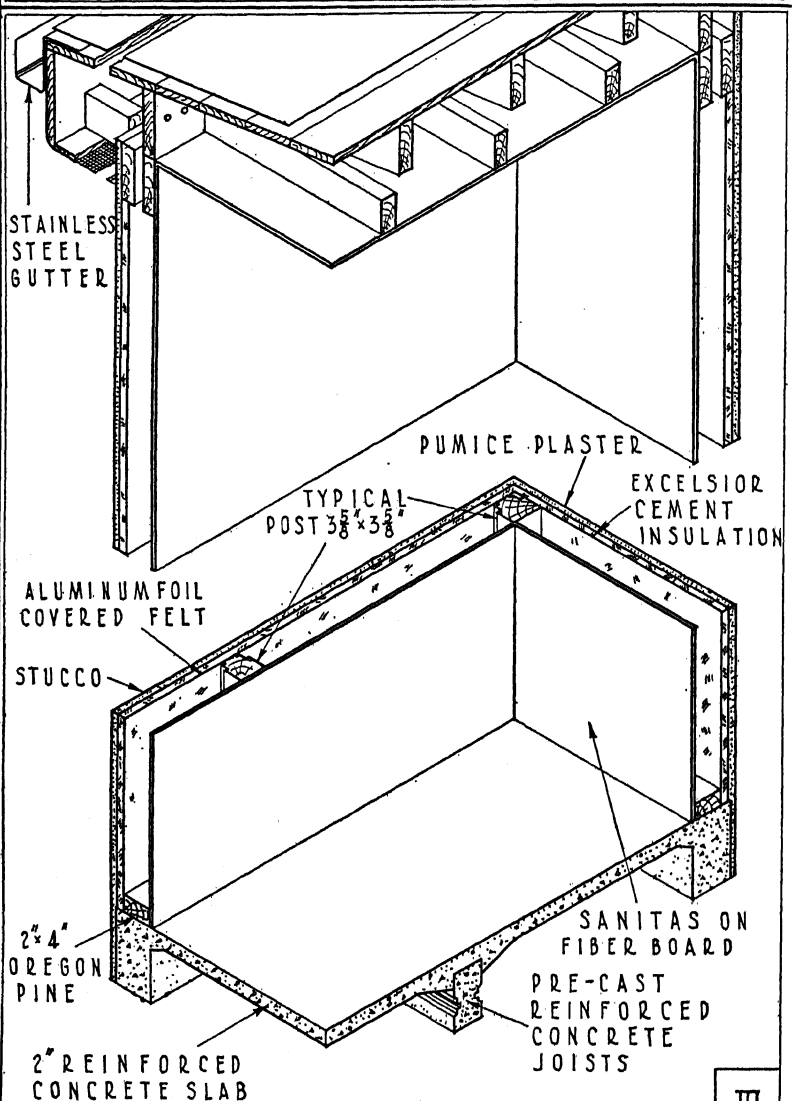

III

V.D.L.

Type III. Pre-cast Unit

Sponsor: Van der Leeuw

History. Van der Leeuw, the Dutch capitalist, has had both friendly and financial interest in the work of Richard J. Neutra. Believing California to be a better place than Holland for housing experiment, he sent Neutra there. The Diatom house (p. 483) is one result of this journey. More recent (1934) is the V. D. L. house, which is regarded only as a laboratory, and in which Neutra lives and does his work.

Structure. This experimental building cannot be described satisfactorily from the point of view of structure only. Like Dymaxion, though on a more practical ground, it has attacked the art of house design from many different points of view.

Thus in plan the building is really four houses combined, in which the livability of combinations may be studied in the round. The units are living quarters with kitchen, eating room, porch and roof, garden, sleeping quarters, a minimum bachelor's dwelling as an independent housing unit, and finally the irreducible housing unit containing living, sleeping, cooking, and bathing facilities.

From an architectural point of view, too, the house is an experiment. It embodies heavy roofing overhangs, a large amount of fenestration, experiments in multiple purpose by the use of curtains and disappearing walls, the use of metal flashing as functional finish, and study of living space, including built-in cabinets meticulously studied even to the provision of a place for sheet music.

Accessories are experimental. Here again we see Neutra's penchant for lights outside the house — Neon tubes beneath the overhanging roof, to produce at night a light influx through the windows similar to that during the day, and thus to eliminate reflections on the glass. In some rooms are flush ceiling lights and inserted wall brackets of new types. Kitchens, too, come in for considerable study.

Wall sections are of various types. The structural frame is a unit-type chassis of surfaced timber posts of 4″ x 4″ stock, rabbeted to receive typical steel sash, and continuously trussed above and below the ribbons of windows to avoid concentration of lateral (earthquake) stresses at a limited number of points. This skeleton is bolted to a pre-fabricated, vibrated, reinforced-concrete joist-and-girder construction, described below. On the north wall, outward from the studding, there is a layer of aluminum foil for insulation against radiant-heat loss, a thick layer of excelsior-cement block for thermal insulation, wire mesh, and finally a light-weight lava-concrete stucco. Inside is a pressed panel board used as finish. On the south wall two different sections appear, but both employ fundamentally the principles of the north wall, though there is clearly an effort to determine the most effective insulation. In one of the south-wall sections Neutra fills most of the air space with mineral wool, covers that outside with aluminum-foil-coated felt, sets in a wood furring strip, and then attaches a gypsum tile and a stuccolike form of finish. Aluminum foil is used for heat reflection on the outside of the south and west walls where sun radiation is intensive.

The floor is constructed on a series of pre-cast reinforced-concrete floor joists 4″ wide and 6″, 7″, 8″, and 10″ deep. These are spaced at 2′–8″ centers. Owing to their peculiar profile, they cooperate with pre-cast bridging to support form boards for casting the floor slab without the use of any nails, so that the forms can be removed without destroying them. It is said that the joists for the entire ground floor were laid in one hour and forty minutes.

Comment. A highly stimulating, though costly, endeavor, the V. D. L. house is entirely too new and too frankly experimental to permit much criticism. On the structural side the house appears to be a fine, finished product.

Bibliography. 17, S.

VAN GUILDER

TYPE Concrete Formed in Situ
SPONSOR Van Guilder Double Wall Company
COUNTRY United States
DATE-1910-15

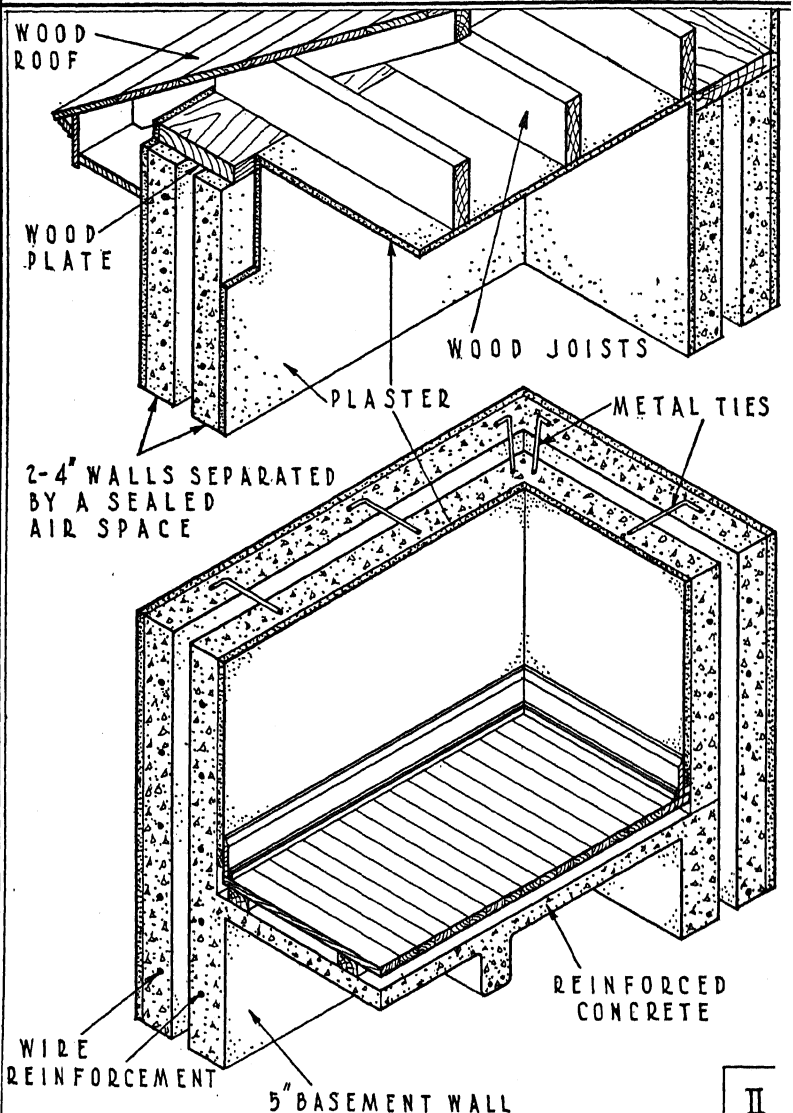

Van Guilder

Type II. Concrete Formed in Situ

Sponsor: Van Guilder Double Wall Company

History. This system of monolithic wall construction has been very extensively used, thousands of dwellings having been built in the United States and Canada. Patents covering the hand molding machines were granted to W. H. Van Guilder in 1917 and were later bought by the Van Guilder System Concrete Building, Inc. In 1923 there were about fifty subsidiary construction companies of the Van Guilder Double Wall Company.

Structure. The system consists of a double poured concrete wall. Floors are of wood or concrete. Partitions are generally wood stud and plaster. The special hand molding machine is the patented feature of the construction. The molds build the wall in courses about 9½″ high. They are operated continuously around the wall. For an average dwelling 3 to 4 courses per day may be built. The separate walls are reinforced with rods in each course and tied together with metal ties.

The molding machine consists of four flat steel plates for the mold walls. These plates are connected in pairs to horizontal bars at the top so that the outer plate of the outside wall and the core plate of the inner wall move together. They are held in position by a toggle joint, operated by a hand lever. When the toggle is released by the lever, the outer plates move out and the inner plates in, permitting the mold to be lifted clear of the poured walls. Special molds are provided for corners.

The exterior may be stuccoed, painted, colored with pigments mixed in the concrete, or left untreated. The interior plaster is generally applied directly to the concrete, but where greater insulation is required wood furring and lath may be used.

Comment. The improvements relate to outside walls only.

Bibliography. 50.

VINYLITE

TYPE Panel
SPONSOR Anonymous
COUNTRY United States
DATE-1930-35

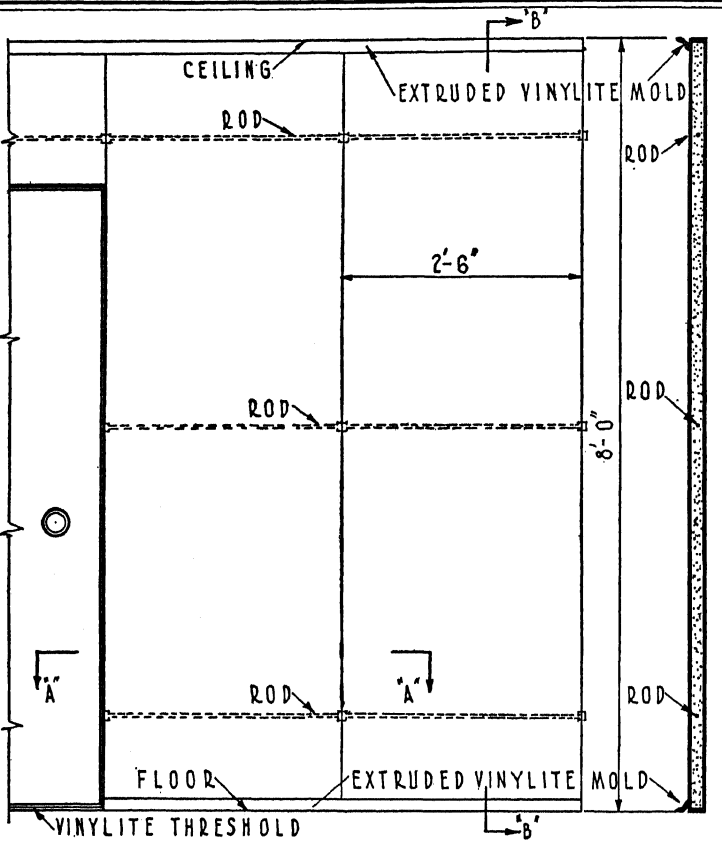

ELEVATION OF WALL PANEL AND DOOR

SECTION B-B

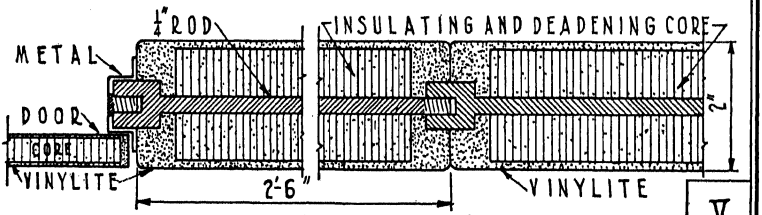

SECTION A-A

V

Vinylite

Type V. PANEL

Sponsor: Anonymous [6]

History. Little is known concerning this construction. It was published in *The Architectural Record* for January, 1934, and at that time it was made perfectly clear that the panels were experimental only and had not been put into commercial production. There is no published record of further development since that time.

Structure. The effort was apparently to show the versatility of Vinylite, a synthetic plastic developed by Carbide and Carbon Chemical Corporation, the properties of which are well and favorably known. Vinylite was used not only for the panels but for floor tiles, doors, moldings, and baseboards, and a good many miscellaneous items, sheets of it even being used to transmit light.

As revealed, the structure is not a complete one, and the chief interest lies in the potentialities of this type of panel. The construction is sufficiently clear in the drawing to need no further comment. No provision is made in the published details for floor or roof structure, and a number of other details remain undisclosed.

Comment. None.

Bibliography. 28.

[6] Although the sponsors are known to those familiar with housing developments, it is apparently their wish to remain anonymous.

WEBB

TYPE Pre-cast Unit
SPONSOR R. C. Webb
COUNTRY United States
DATE-1920-25

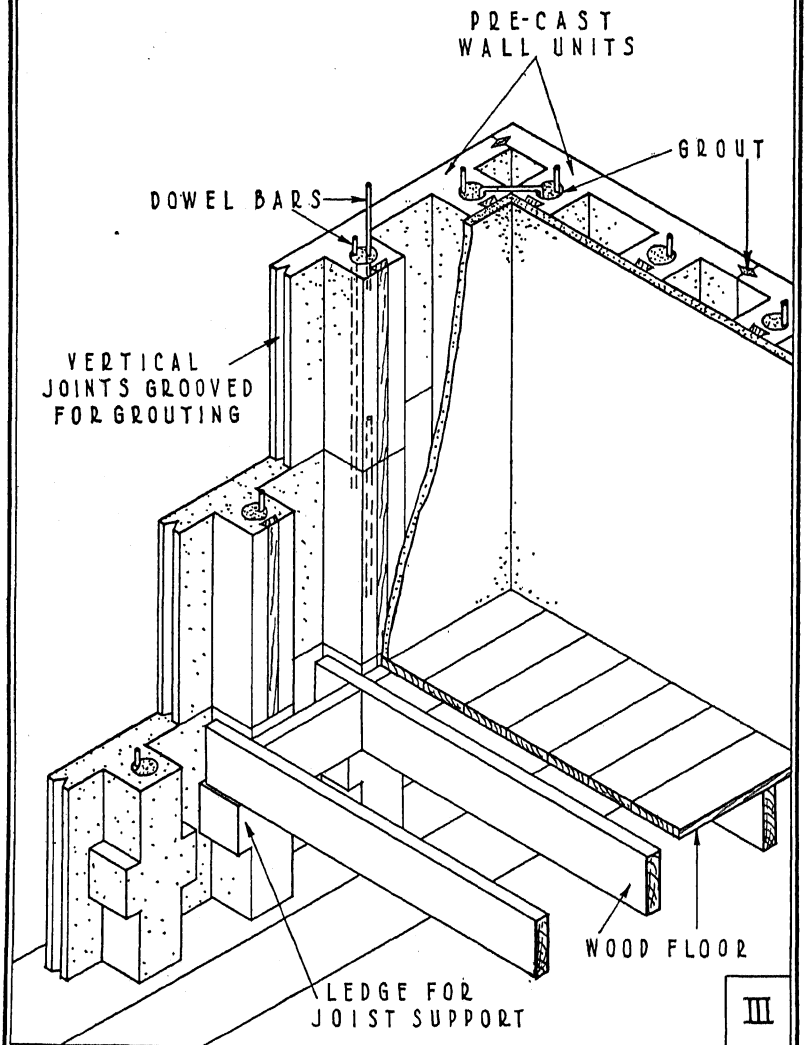

III

Webb

Type III. Pre-cast Unit

Sponsor: R. C. Webb

History. This system of pre-cast wall units has been used for a few dwellings and other small structures in Louisiana. The Portland Cement Association estimates first use to have been about 1922. It may safely be placed in the period 1920–1925.

Structure. The pre-cast wall units, made in wood or steel molds, are 24″ high, 32″ long, and 3″ thick. Cast in the units are stud or rib elements, 5½″ x 6″ in section and spaced every 16″ on center along the wall. In the center of each stud section is cast a continuous 3″ round hole. The units are laid in courses with the vertical joints broken but with the stud sections in vertical alignment, so that rods can be placed in the 3″ holes and then embedded in grout, thus reinforcing the wall from foundation to roof plate. At floor levels, the stud sections are widened, creating ledges which carry the ends of wood floor joists. Edges of the units are grooved for grouting to close the vertical joints. Vertical wood nailing strips are cast in the face of the stud sections for attaching lath and plaster.

Comment. The systems applies to outer walls only and appears to be limited to one-story structures.

Bibliography. 50.

WEDBERG

TYPE Concrete Formed in Situ
SPONSOR Axel G. Wedberg
COUNTRY United States
DATE-1925-30

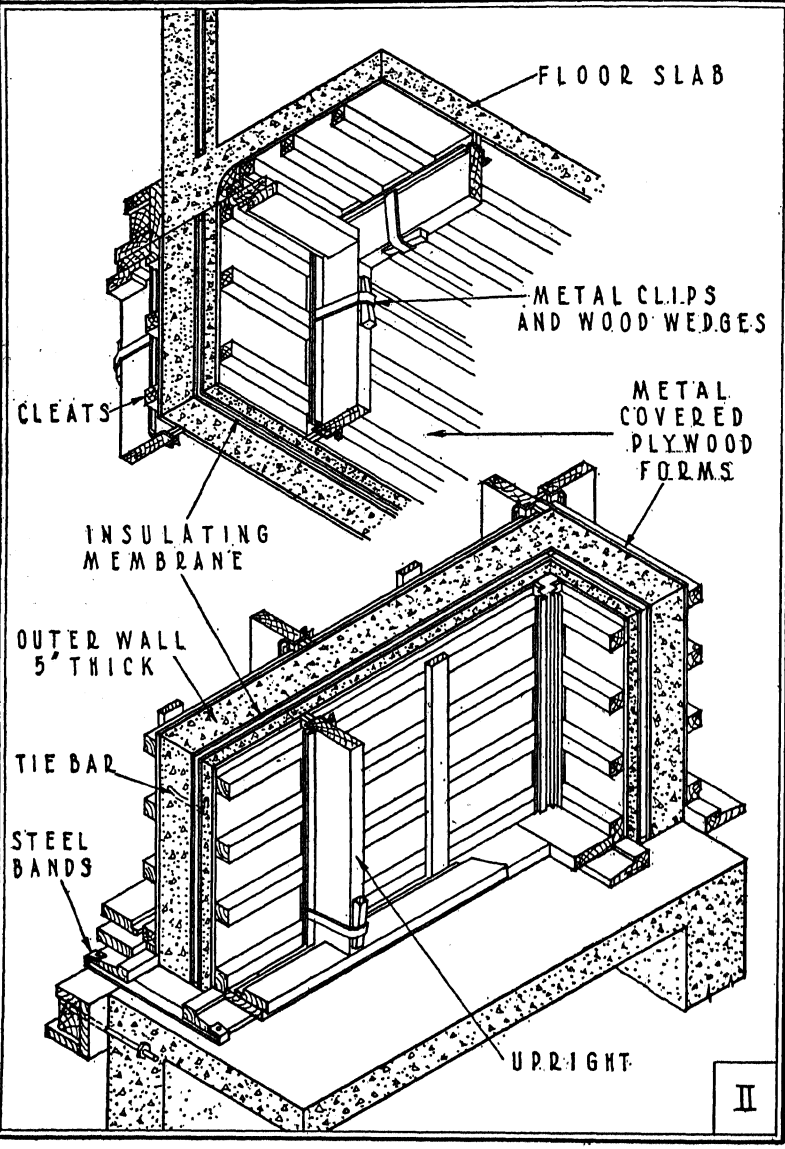

II

Wedberg

Type II. Concrete Formed in Situ

Sponsor: Axel G. Wedberg

History. Two houses in New York City and one in Chicago have been built by this system. The Portland Cement Association estimates first use to have been about 1926. It may safely be placed in the period 1925–1930.

Structure. This is a system of monolithic solid walls, floors, and flat roofs. Standard panels are 3′–0″ x 8′–0″. Panel forms are made of wood or plywood covered with sheet metal. Bracing is by four horizontal wood cleats and a vertical stringer in the center of the panel. Panel edges are aligned and secured by heavy framing pieces, about 2″ x 8″, the ends of which are aligned by heavy wood plates. Panels are attached to the frame pieces by metal straps, tightened by wood wedges. Outside walls consist of solid concrete 5″ thick, separated from a 2″ inside section by an insulating membrane, these two wall sections being tied together by bars passing through the insulation. The insulating membrane consists of two thin sheets of wood, spaced about ½″ apart by wood strips. The ½″ space may be filled with insulating material.

The floors and flat roof are solid reinforced concrete poured with similar panel forms. Floor loads are carried to the outer 5″ wall section by omitting the insulating membrane at floor levels.

Exterior wall finish is paint or stucco, and the interior is painted or plastered directly on the concrete surface.

Comment. The house in Chicago is reported to be in excellent condition with the occupant well satisfied.

Bibliography. 50.

WEIR

TYPE Panel
SPONSOR G.and J. Weir, Limited
COUNTRY England
DATE-1920-25

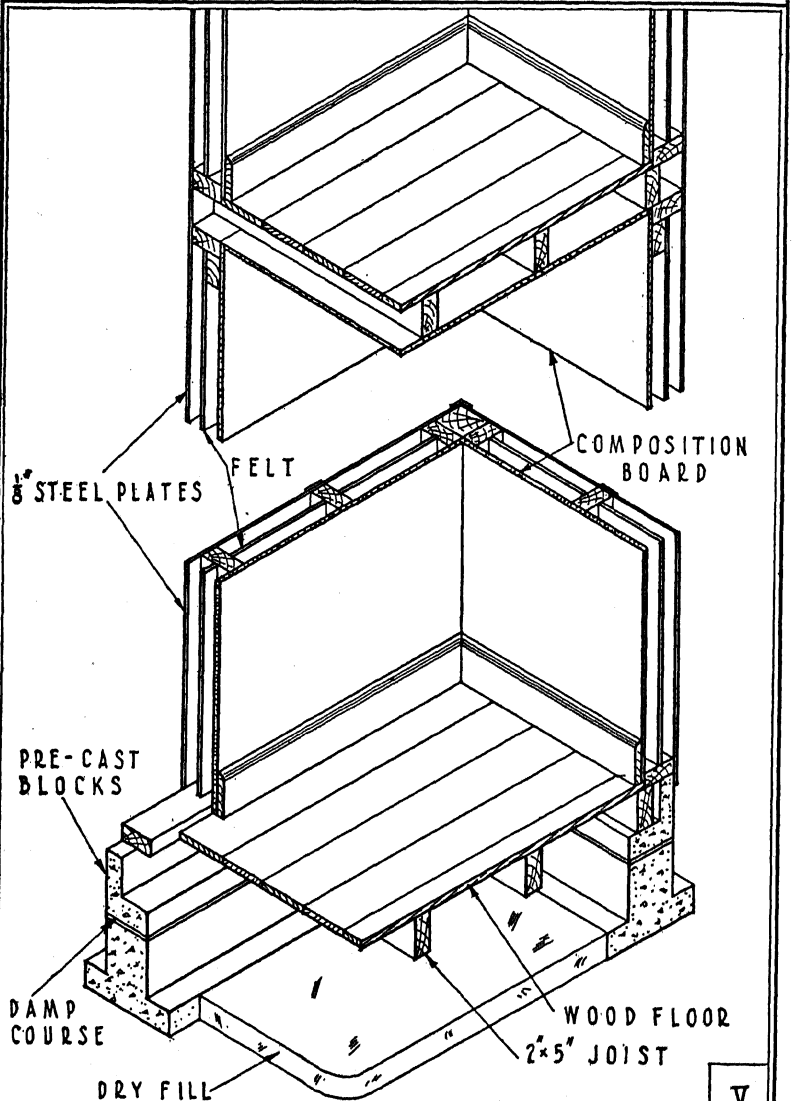

V

Weir

Type V. PANEL

Sponsor: G. and J. Weir, Ltd., Housing Factory, Cardonald, Glasgow

History. Prominent among the steel types of "alternate" construction in post-War Britain was that sponsored by Lord Weir, owner of large pump and condenser works in Glasgow. By 1926 many Weir houses had been built in Great Britain, some under the subsidy on recommendations by the Moir Committee, but like other "alternate" constructions they were seldom as popular with the occupants as traditional houses, and of late years their use has been on the decline. (See British Systems.)

Structure. The Weir system was quite revolutionary for Great Britain. It involved the use of two materials relatively rare in British houses — steel and wood. The pre-fabricated panels were made of 2″ x 4″ wood framing, covered on the exterior with ⅛″ steel plates. In the center of the panel was a layer of insulating felt, which provided a double air space. The interior face of the panel was of composition board. A pre-fabricated roofing element was also employed. The floor was similar to conventional American floors, with allowances for British practice. So, too, were the foundations. In this building the steel sheets were really only siding which it was hoped would be highly permanent, while the structural strength was provided by the wooden studs.

The Weir factory provided models of houses at fixed prices which included a considerable amount of equipment suited to British requirements — grates, some combination pieces of furniture, washtubs, sinks, gas stoves, cisterns, bathtub, lavatory, water-closet, and piping. Other services were provided at additional cost.

Comment. The Weir approach preceded by many years the recent American commercial endeavors toward the same end, that of providing a whole house. Photographs of the Weir houses show that for the time in which they were built they were remarkably

modern in architectural style and suggested present-day developments in design. Whatever the ultimate results, this system represents a study of the many elements of the problem rather than a concentration on any one of them. It was estimated by the sponsors that £75 would be saved on every house built by their method. Damp- and vermin-proofing have always received more attention from British housing students than from Americans, and the Weir houses were claimed to be excellent in these respects.

Bibliography. 41, 42, 43, 44, S.

WHEELING

TYPE Panel
SPONSOR Wheeling Corrugating Company
COUNTRY United States
DATE-1933

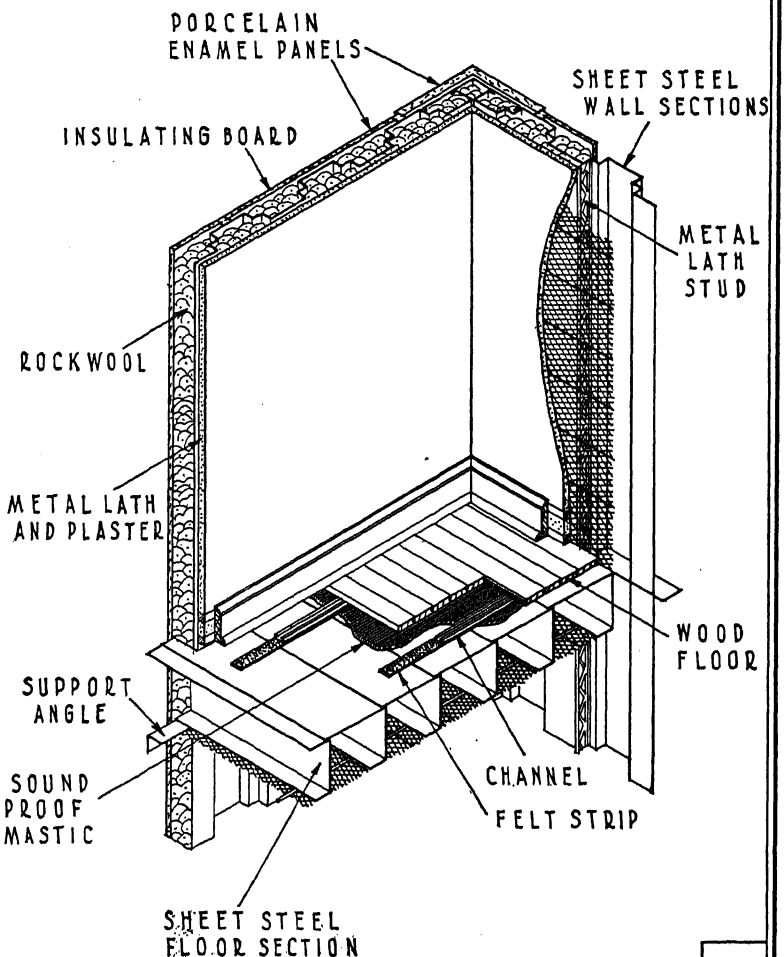

V

Wheeling

Type V. PANEL

Sponsor: Wheeling Corrugating Company. House designed by Charles Bacon Rowley and Associates, Architects.

History. A house of this type was constructed by the Wheeling Corrugating Company in an outlying residential section of Wheeling, West Virginia, during the year 1933. The house was built frankly as an experiment, and progress was deliberately slow in order that the sponsors might observe the difficulties encountered and profit by experience in every phase of the work.

Structure. The building resembles in many respects the houses of the American Rolling Mill Company. Pre-fabricated steel panels form the structural wall section. These are welded together in the field, and some of their webs are in the form of metal-lath studs, to which metal lath for interior wall finish is applied. Rock wool fills the interstices of the wall on both sides of the webs of the panels. The interior finish is plaster applied to metal lath supported by the metal-lath studs, or, in the case of interior partitions, by a patented steel stud. Porcelain-enamel plates bonded to insulation board are screwed to the outer side of the wall panels through furring channels welded to the wall section with washers bearing on the panel flanges. Casements and door frames are of steel. The structural floor consists of a series of steel panels resting on a supporting angle and welded together, while metal lath supports plaster on the ceiling. The finish floor is of wood supported on steel channel screeds, which in turn are carried by felt with the space between screeds filled with soundproof mastic.

Comment. The sponsor of this system is a large and progressive corporation. The original design seems to have been well thought out. It is naturally planned to utilize a considerable quantity of the company's products. The house should be dry and fireproof, and of course is suited to conventional interior finishes and wall treatments. The sponsors have recognized the necessity for suppressing noise transmission in steel floor construction.

Bibliography. 13, 28, S.

WRIGHT

TYPE Concrete Formed in Situ and Pre-cast Unit
SPONSOR Frank Lloyd Wright
COUNTRY United States DATE - 1923

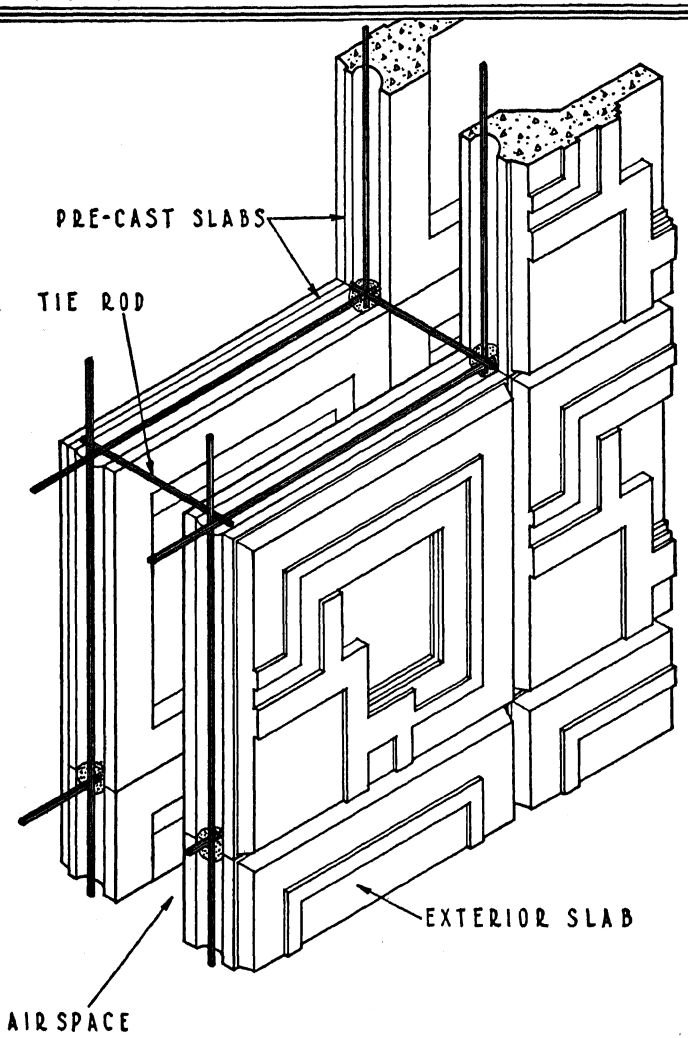

II / III

Wright

Type II–III. Concrete Formed in Situ; and Pre-cast Unit

Sponsor: Frank Lloyd Wright

History. Frank Lloyd Wright is perhaps the greatest of contemporary American architects — certainly that is his reputation outside of his own land. His ever-fertile mind is entirely creative, and it is not to be wondered at that, after two approaches to the house problem, distinctly architectural though by no means conventional, he should have become impatient of current methods and worked out his own approach to house building. The first application of the idea of the Textile-Block slab construction was in the Millard house at Pasadena in the winter of 1923. Subsequently the system, with modifications, was used in a number of other Wright-designed houses. Recently Wright has advanced certain new ideas, notably in the Jones house in Tulsa, Oklahoma. The system has not been widely adopted by others.

Structure. A slab of concrete of unusual shape is pre-cast. This slab is about 3″ thick, and of varying sizes horizontally and vertically, but all easy to handle. Along their edges all slabs have cooperating grooves that form a series of cylindrical openings horizontally and vertically. Lightweight reinforcing rods are inserted in these cavities and the paired walls of slabs tied across by rods. The cylindrical holes are then filled with concrete, to form a gridwork of reinforced concrete which is in turn joined to a reinforced concrete tile-and-joist floor structure. The sponsor relies on the air space between the pairs of slabs for insulation.

Comment. Of unquestioned organic quality and beauty in effect, this system does not seem to go very far toward pre-fabrication. The slabs are rather complex in detail and would perhaps offer difficulty in casting. Wright says of the early experiments that without organization, with experimental molds and unskilled labor, and with none of the accuracy essential for economy, the cost of the building was not more than that of a frame and stucco building of the usual Los Angeles type with the same plan and

a good Spanish exterior. He reports considerable difficulty in making the buildings waterproof but attributes this to poor workmanship and not to the nature of the scheme.

Bibliography. 20, S.

Wudnhous

Type V. PANEL

Sponsor: Housing Company

History. Like all the Bemis designs shown in this volume, this system was sponsored by a subsidiary company, Housing Company. Like all the others, it was first tried out in the laboratory and then incorporated into one or more houses. Wudnhous construction has been subjected to a great deal of laboratory test. The first building of this general type was erected in 1931 in South Tamworth, New Hampshire, for one of the employees of South Tamworth Industries, Inc. The construction was employed for an addition to one of the inventor's buildings in South Tamworth in 1933, and has also been the subject of further research in the laboratory.

Structure. The fundamental idea of this construction is the same whether the units are used vertically, as shown in the drawing, which illustrates the 1933 construction; or horizontally, as used in the previous building. The general theory is to employ, for most of the wood elements of the house, lumber that is usually deemed unsuitable for structural use because of its small cross-section or short length. A great number of standard 1½″ x 1½″ wooden elements are made up in tongued-and-grooved form. The length may vary as joints in the individual lengths have no effect on the construction after assembly in a panel. Series of these elements are assembled into panels of the order of 2′–0″ in width, using tongued-and-grooved pieces 4½″ deep at the panel edges and ends. Since one tongue is missing in this arrangement, a spline is used where two grooves come together. The entire panel may be glued or nailed together; expansion and contraction are more uniformly distributed over the panel if the latter method is used. Panels of story height are assembled vertically by means of an intermediate wood aligner of the same size as the flanges (see similar use of aligner under Plate Girder). A special corner post made up of the same standard type of pieces is necessary. Floor

WUDNHOUS

TYPE Panel
SPONSOR Housing Company
COUNTRY United States
DATE-1931

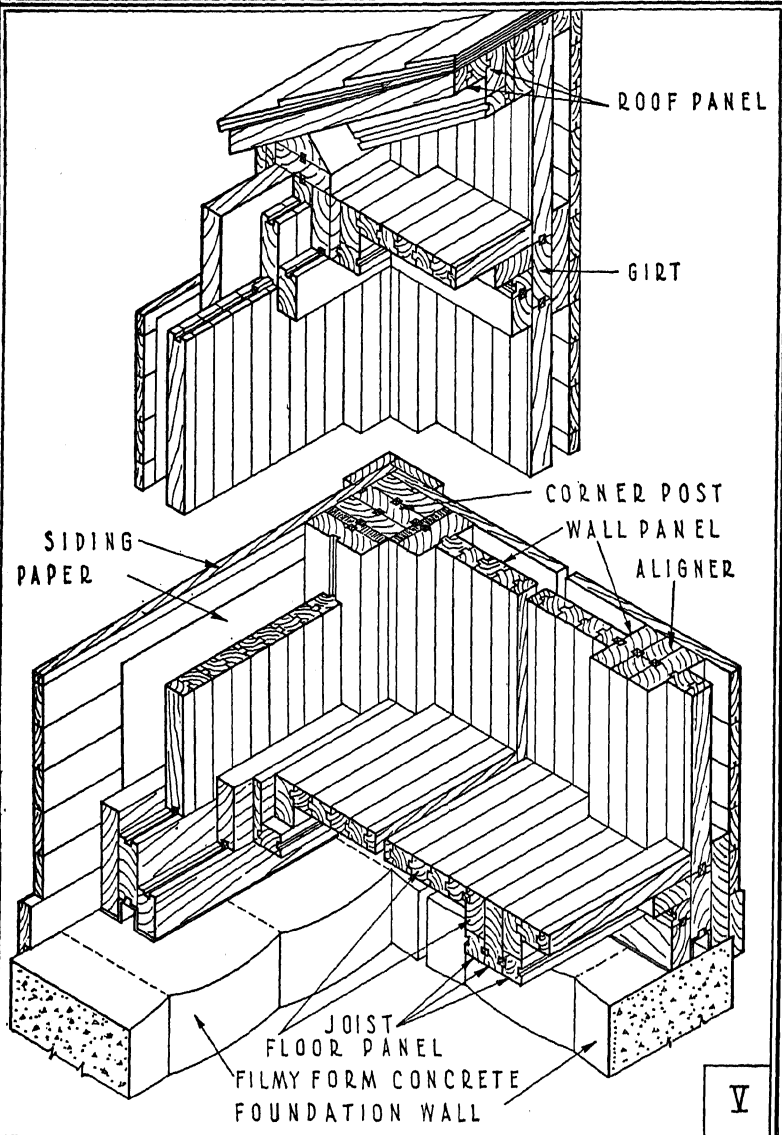

V

units have a slightly different cross-section, but again are made of the same standard pieces. The whole building can be screwed together or nailed. Exterior and interior finishes are optional. It is possible, as shown in the drawing, to apply siding, attaching it to the flanges, or to use other exterior finishes. On the interior the wood may be left exposed, with the panel joints strongly expressed and the wood painted or stained. It is also possible to fit panels in between the flanges, in which case the joint may still show or may be flush. It is further possible to apply panels on the outside of the flanges or to use conventional lath and plaster.

In this drawing is also shown a special type of forming developed by the inventor. This method (" Filmy-form "), primarily for foundation purposes, employs flexible sheets of material such as burlap or electro-sheet copper, arranged in such a way that the sheets may expand under the uniform hydrostatic pressure of the concrete into a form something like that shown. These forms are very inexpensive, and with the exception of the stanchions are left in place permanently.

Comment. Concrete cast by the Filmy-form method affords a less expensive foundation than that usually produced with ordinary forms.

The Wudnhous system is akin to the Swedish systems in that it uses rather more wood than is required in a conventional American house. But as it employs wood that is not of structural grade and often not suitable for ordinary house building, material that can be purchased at lower prices, the net difference in final cost for the lumber is not appreciable. The erection of wood into panels of this type affords good protection against expansion and contraction and opens the door to pre-fabrication of wooden members.

Bibliography. S.

MENTION LIST

System	*Sponsor*	*Description*	*Bibliographical Reference* *
Armostone	Concrete Housing Corporation of America	Wall system of large pre-cast reinforced concrete slabs	50
Awning Roof	James Stewart Corporation	Roof construction of self-supporting welded steel plates	58
B and P	Walter F. Ballenger and Emile G. Perrott	Wood frame strengthened with reinforced-concrete studs and girts, wire lath stuccoed and plastered	50
Baermann	Walter Baermann	Central columns with cantilevered beams, walls in 3′ sections	28, S
Bar-Z Gunite	Soulé Steel Company	Stucco on open-web steel frame	50
Beck	W. G. Beck	Reinforced-concrete frame and pre-fabricated wall units of wood and insulation	50
Beltsville	United States Department of Agriculture	Canvas applied to wood sheathing	28
Betzler	Paul Betzler	Wall and floor construction of long pre-cast reinforced-concrete channel section units	50
Boulton	Boulton and Paul, Ltd. (England)	Wood frame, walls in prefabricated sections, floors of pre-cut lumber	S
Bow	J. A. Bow	Pre-cast reinforced wall and floor units of dense concrete exterior with an interior core of lightweight concrete	50
Bowman	Bowman Brothers	Balanced steel frame suspended from central tower	5, 7, S
Brandt	George W. Brandt	Wall construction of monolithic cored concrete	50
Brice-Pearson	Brice-Pearson Corporation	Columns, floor beams, and floor slabs of pre-cast concrete, masonry exterior	50

* Numbers refer to the corresponding numbers in the Bibliography; S means printed matter furnished by sponsor, or correspondence with sponsor, or both.

System	*Sponsor*	*Description*	*Bibliographical Reference*
Brick	The Brick Manufacturers' Association of America	Reinforced brick	12, 26, 35, S
Broughton	The Broughton Company	Wall construction of concrete reinforced pre-cast studs and slabs	50
Bruhn	Bruhn Steel Products Company	Steel frame and reinforced steel plates interlocked for interior partitions	44
Burns MacIntosh	California National Steel Company	Welded steel frame constructed of standard shapes	44
Burton	L. L. Burton	Wall construction of story-height, pre-cast reinforced-concrete H-section units; interior furred for lath and plaster; exterior stucco	50
Canvas	Kocher and Frey, for Cotton Textile Institute	Canvas stretched over wood frame	8, 25, 28, S
Cellular Steel	Richard J. Neutra and Gregory Ain	Standard Robertson steel floor units (see Lindeberg and Palmer) used for both walls and horizontal spans; vertical wall elements in multiple sections, grouted into a grooved concrete footing, act like cantilevers; ground floor covered with slab of Diatom (see Diatom); effort to use façades exposed to sun radiation by small intake openings to produce automatic air convection for cooling	67, S
Century House	Henry Boot and Sons, Ltd. (England)	Pre-cut lumber or concrete pier and panel construction	S
Columbian Homes	Columbian Steel Tank Company	Exterior wall construction of flanged steel plates; interior finish insulation board	10, 28
Concrete Hollowall	Concrete Hollowall Company	Wall construction of cored monolithic reinforced concrete	50

System	*Sponsor*	*Description*	*Bibliographical Reference*
Concrete Lumber	J. R. McPherson	Double wall of small pre-cast concrete slabs with dry fill	S
Concrete Tube	H. Sauvage (France)	Exterior walls of vertical concrete tubes	34
Conzelman	John E. Conzelman	Wall construction of concrete pre-cast story-height units, channel and cored sections	50
Coombs	A. H. Coombs	Wall construction of double rows of small insulated pre-cast concrete slabs and reinforced-concrete columns poured in situ	50
Cotton	Stanley W. Nicholson	Wood construction covered with cotton sheeting and cellulose "dope"	28
Cresmer	J. H. Cresmer	Wall construction of cored monolithic reinforced concrete	50
Crossett	Crossett, Watzek, Gates Company	Pre-fabricated interlocking all-wood panel construction for exterior walls, interior partition, floors, and roof	51
Cypress	Southern Cypress Manufacturers Association	Wood-frame construction to demonstrate uses of cypress (at 1933 Century of Progress exposition, Chicago)	51, S
Deichmann	O. A. Deichmann	Wall construction of large pre-cast reinforced-concrete sections incorporating exterior finish and grounds for interior finish	50
Dennis-Wild	Dennis-Wild (England)	Frame of light steel angles designed for brick or stucco exterior	41, 42, 43
Design for Living	John C. B. Moore	Wood frame in pre-cut panels to illustrate a method of layout (at 1933 Century of Progress exposition, Chicago)	12, 28
Dexheimer	C. H. Dexheimer and Son	Closely spaced steel frame, metal lath, plaster, and stucco	41, 43, 44, 56, S
Dorman, Long	Dorman, Long and Company (England)	Heavy steel frame, cork insulation, and concrete-on-wire-mesh finish	44

System	*Sponsor*	*Description*	*Bibliographical Reference*
Dovell	Harry L. Dovell	Steel-panel floor construction with skyscraper steel framing	44
Dubin	Henry Dubin	Floor construction, steel frame and plates carried by two heavy steel columns	2, 44
Egloff	Leopold C. Egloff	Wall construction of small pre-cast concrete slabs in two rows, and space between filled with concrete	50
Emery	Amos Emery	Wall construction, concrete ashlar blocks, steel bar joists supporting reinforced-concrete floor and roof	13
Eslien	Eslien Company	Light steel frame covered with galvanized steel sheets for exterior; interior walls wood studs and plaster	41, 43
Fer-O-Con	Fer-O-Con Corporation	A construction of reinforced concrete walls and floors formed and reinforced with expanded metal with pressed steel tubular units for aligners	Various U. S. patents, from 1,877,898 to 2,010,848, S
Florida	State of Florida	Floor and roof construction of concrete, integrally waterproofed; exterior walls of cellular load-bearing tile; designed to illustrate Florida living conditions (at 1933 Century of Progress exposition)	12, S
Förster	Frigyes Förster	Pre-made panels of wood frame and sheet-metal surfaces, filled with insulation	S
Foster	T. J. Foster, National Bridge Works	Skyscraper steel frame, concrete pre-cast units outside, insulation and gypsum inside	3, 43, 44, S
Frost	H. T. Frost, Hollow Concrete Wall Company	Wall construction, double monolithic concrete	50
Gabriel	Gabriel Steel Company	Steel frame of trussed members punched every 2″ for connections; insulation outside	44

System	*Sponsor*	*Description*	*Bibliographical Reference*
Garrett	Neal Garrett	Two lightly reinforced stucco surfaces spaced apart by semi-tubular ties	50
Glass Block	Owens-Illinois Glass Company	Walls of glass blocks, to show uses of glass (at 1933 Century of Progress exposition)	26
Gleason	Miss Kate Gleason and Associates	Wall construction of solid monolithic concrete	50
Gottschalk	Prosper L. Gottschalk	Wall construction of monolithic concrete having vertical segmental air spaces on the inside face	50
Hansen-Consteelair	Louis Hansen	Wall construction of light steel studs and large pre-cast concrete slabs	50
Harloff	B. C. Harloff	Wall construction of small pre-cast reinforced concrete slabs on a frame of wood or steel	50
Hartley	Fireproof Construction Company	Double wall of small pre-cast concrete slabs and reinforced poured concrete studs and beams	50
Haskelite	Haskelite Manufacturing Corporation	Plywood panels bolted to both sides of a light steel frame	S
Hillman	Monolithic Hollow Concrete Form Corporation	Double wall construction of monolithic concrete	50
Houghton	W. H. Houghton	Pre-cast concrete wall slabs in three rows and pre-cast floor slabs	50
House of Tomorrow	George Fred Keck	Steel frame with central mast, glass exterior, to demonstrate mechanical equipment and new materials (at 1933 Century of Progress exposition)	12, 28, S
Hueber	Hueber Brothers	Wall and floor construction of reinforced monolithic concrete	50
Hydraulic	Hydraulic Steelcraft Company	Wall construction of solid monolithic concrete	50
Interlocking Channel	F. W. Fitzpatrick	Wall construction of pre-cast concrete story-height channel-shaped units	50

System	*Sponsor*	*Description*	*Bibliographical Reference*
Isotherme	R. Decourt (France)	Steel frame with panels of thick insulation faced with concrete	44–S
Johnson	T. L. Johnson	Columns and floor slabs of reinforced monolithic concrete; pre-fabricated cement-asbestos wall panels insulated with rock wool	50
Johns-Manville	Johns-Manville Corporation	Transite panels attached to steel framing by button keys	6, 9
Jones and Laughlin	Jones and Laughlin Steel Corporation	Skyscraper steel frame, stucco outside and plaster inside	27, 44, 56
Kreil	F. X. A. Kreil	Wall construction of cored reinforced monolithic concrete	50
Lambie	Lambie Concrete House Corporation	Wall construction of reinforced monolithic concrete	50
Larson	Carl T. Larson	Wall construction of cored monolithic concrete	50
Larzelere	H. G. Larzelere	Double walls of story-height reinforced pre-cast concrete units with space between filled with concrete; floors of pre-cast concrete units	50
Latisteel	F. A. Ruppel	Metal lath and stucco on a steel pipe framing	50
Lehrack	Charles R. Lehrack	Double wall of monolithic concrete	50
Loc-Bloc	Ventilating Block Company, Inc.	Wall construction of pre-cast interlocking concrete slabs	S
Lock-Blok	Harry J. Scott	Steel tubing used for studs and rafters with pre-cast slotted lightweight concrete wall blocks	S
Lumber Industries	National Lumber Manufacturers' Association	Wood frame, to demonstrate uses of wood for construction and finish (at 1933 Century of Progress exposition)	12, 26, 35, S
MacFarlane	Walter MacFarlane (Scotland)	Walls constructed of $\frac{5}{8}$" cast-iron plates carried on cast-iron uprights embedded in concrete foundation; light steel roof trusses	41, 43

System	*Sponsor*	*Description*	*Bibliographical Reference*
Mahon	R. C. Mahon Company	Wall units of insulation covered with steel sheets, assembled with asbestos gaskets	25
Masonite	Masonite Corporation	Wood frame, to demonstrate uses of Masonite products (at 1933 Century of Progress exposition)	12, 26, 35, 51, S
Merriett	A. S. Merriett	Wall construction of cored monolithic concrete	50
Metaforms	Metal Forms Corporation	Wall construction of monolithic concrete	50
Monocrete	William Otterson and Arthur E. Hatch	Wall construction of cored monolithic concrete	50
Moore Unit	The Texas Concrete Construction Company	Wall construction of story-height channel-shaped precast reinforced-concrete units	50
Mopin	Eugène Beaudouin et Marcel Lods (France)	Light steel frame, thick insulation and all finish mounted on wood grounds	48
Mortarless Unit	J. W. Brisco, Mortarless Unit Construction Company	Walls of concrete masonry units, designed to accommodate concrete studs	50
Multicellulaire	Société de Constructions Multicellulaires (France)	Frameless structure; walls and floors made of box sections of corrugated steel sheets	44
National Steel Homes	Harley S. Bradley	Closely spaced steel frame, exterior of steel plates, interior insulation board	10, 28
Naugle	Harry M. Naugle	Closely spaced steel frame; floors and roof ferro-lithic corrugated steel plates and concrete	44, 56
Negro Housing	Alfred Kastner	Wall sections of pre-cast reinforced-concrete sections; trussed steel roof	28
Novelle	Bernard Novambére	Wall units of light steel framing, artificial stone exterior, plaster interior finish, and insulation in center of wall	S

System	*Sponsor*	*Description*	*Bibliographical Reference*
Olmsted, R. C.	R. C. Olmsted	Large pre-cast concrete units for walls, floors, and roof	50
Osakis	Peter Rutten	Pre-cast concrete studs and joists; two rows of pre-cast wall slabs with intermediate layer of sheet insulation	50
Pancrete	Pancrete Wall Company and F. McM. Sawyer	Double wall and floor units of pre-cast concrete slabs	50
Permanesque	Homes Permanesque of America, Inc.	Heavy steel frame with conventional masonry walls and monolithic floors	44
Phoenix (Concrete)	Hugo Effenberger	Double wall construction of small pre-cast concrete units	50
Pisé de Terre	Various	Walls of earth rammed hard between forms	64
Poulson	Niels Poulson	Heavy steel frame construction	30, 44
Rackle	George Rackle & Sons Company	Double wall construction of pre-cast concrete studs and slabs	50
Safety Welding	The Safety Welding Company	Closely spaced steel frame, shop-welded into sections	44
Sawyer	F. McM. Sawyer	Double wall construction of pre-cast concrete slabs and poured reinforced-concrete studs	50
Schub	C. H. Schub	Wall construction of solid monolithic concrete	50
Scullin	Scullin Steel Company	Closely spaced, welded steel frame; subfloors of corrugated steel plates welded to floor beams	44
Sears, Roebuck	Sears, Roebuck and Company	Wood frame, pre-cut lumber	S
Simplex	J. M. Todd	Wall construction of solid, cored and ribbed, monolithic concrete	50
Sloane	W. and J. Sloane	Wood frame, to demonstrate house furnishings (at 1933 Century of Progress exposition)	12, S
Steelox	The Steelox Company	Wall and roof construction of interlocking steel sheet units	49

System	*Sponsor*	*Description*	*Bibliographical Reference*
Steilberg	Walter T. Steilberg	Stucco on a poured reinforced-concrete frame	50
Stevenson	Frontier Construction Company, Ltd. (Canada)	Double wall construction of pre-cast concrete slabs and studs	50
Stuko-Steel	William Horn Structural Iron Works	Heavy steel frame, welded in sections, covered both sides with wire lath for plaster and stucco	41, 43
Swan	Swan House, Inc.	Wall construction of pre-cast reinforced-concrete studs and slabs	50
Thayer	E. N. Thayer	Stucco on a poured concrete frame	50
Traylor-Dewey Gunite	Traylor-Dewey Contracting Company	Stucco on a poured concrete frame	50
Tri-Ply	Carroll Tri-Ply Company	Wall construction of pre-cast reinforced concrete in large sections	50
Tucker	C. T. Tucker	Wall construction of monolithic concrete with field stone embedded in the outer face	50
Underdown-Weymouth-Crowell	Donald Underdown	Double wall construction of pre-cast slabs and poured concrete columns	50
Uni-form	Universal Form Clamp Company	Wall construction of solid monolithic concrete	50
Unit	Unit Construction Company and Standardized Construction Corporation	Walls and floors of large pre-cast concrete slabs	50
Universal Building	Universal Building Corporation	Skyscraper steel frame, cork insulation, and Haydite poured in situ	44
Vanderbeek	Nelson K. Vanderbeek	Single wall construction of pre-cast reinforced concrete units	50
Wagner	Albert Wagner (Germany)	Steel frame with solid brick wall	42, 45
Weeks	Charles R. Weeks	Single wall construction of small pre-cast concrete slabs	50

System	*Sponsor*	*Description*	*Bibliographical Reference*
Weldcrete	James G. Dudley	Frame of rolled steel shapes with metal lath welded both sides for application of plaster and stucco; horizontal septums form small dead-air spaces for insulation	41, 43, 56
West Coast Lumber	West Coast Lumbermen's Association	Wood frame, pre-cut lumber	S
Weyerhaeuser	Weyerhaeuser Timber Company	Experimental house, wood frame of pre-cut lumber	65
Winter	E. M. Winter	Wall construction of light steel frame encased in pre-cast concrete units	50
Zimmerling	H. H. Zimmerling	Double wall construction of pre-cast reinforced-concrete slabs and poured reinforced-concrete studs	50

Questionnaire For Sponsors

As a guide in the difficult task of judging the relative merits, both present and potential, of the systems here described, the more important points for consideration are here set down in the form of questions. In general, these questions are of two kinds: they relate to the cost of the finished building or have to do with its properties. To each of these questions is appended the only answer completely satisfactory from the viewpoint of the housing industry as a whole. For special territories, or for expensive types of housing, some modification in these answers may be permitted; and for a system offering a real solution to the problem of lower cost, more restrictive answers might be required. But any sponsor who can answer favorably the following list of questions will be in a position to meet the well established competition of the traditional house.

1. The question of cost must be raised with respect to each effort, for the present house is a fairly good product and attack upon it has quite generally and quite properly been focussed on reducing its cost while retaining at least equal quality. It would be possible to sell a better pre-fabricated house at the same price as the present conventional house, but any one who has been concerned with marketing knows that it would be far easier to sell an equally good house at a lower price. Moreover, as has been amply shown throughout this work, solution of the housing problem for the lower-income groups demands cheaper construction with no sacrifice of quality.

ANSWER: It is extremely difficult to arrive at actual cost figures for any of the constructions proposed. In most cases so few houses have been built, and these in so restricted an area, that cost figures obtainable are likely to be deceptive. Moreover, as would be expected in any initial effort, these cost figures are likely to be high. This is the reason why so few sponsors have cared to discuss unit cost. It does not excuse those who have failed to consider them in what they propose. In determining cost in general several subsidiary questions should be asked:

2. If the proposal employs conventional building materials now used in houses, are they employed in less quantity than now, or certainly in no more than equal quantities?

ANSWER: Should be YES.

3. If the above answer is NO, then is it probable that in the method used the economies of fabrication and erection will offset the increased cost of materials?

ANSWER: Must be YES.

4. If the materials employed are different from those now in use, is there any substantial reason to expect that the prices of the new materials will be lower than or even equal to those of the conventional materials?

ANSWER: Should be YES.

5. If the above answer is NO, can the system show offsetting economies in fabrication and erection?

ANSWER: Must be YES.

6. If new materials are used, are they known to be available in quantities sufficient for large-scale production?

ANSWER: Must be YES.

7. In pre-fabricated systems involving an increase of shop work, does the design guarantee or even show promise of a reduction in the cost of field labor sufficient to pay the shop costs, including shop labor and overhead?

ANSWER: Must be YES.

8. If the pre-fabricated system does promise economies in field labor, is pre-finish possible with the proposed system so that by increasing the amount of pre-finish further economies in field operations will be available?

ANSWER: Should be YES.

9. Are the finishes used such that the parts can be shipped and installed without damage and the finished result compare favorably with the usual standards?

ANSWER: Must be YES.

10. Does the system require elaborate molding equipment or concrete mixers, derricks or cranes, or other heavy field equipment?

ANSWER: Should preferably be NO. If such equipment is required, it may be impossible to realize economies in individual buildings, even though these may be parts of large-scale housing proj-

ects. The reasons for this are the additional cost of routing and shipping the equipment to widely scattered single jobs, the time lost while the equipment is en route, and the necessity for many depots for storing the equipment, which involves a heavy increase in the overhead charges. If the answer is YES and all these objections can be satisfactorily answered, the system may then be successful.

11. If the system involves wet construction, poured concrete or the extensive use of plaster, is the cost of waiting for the structure to dry out, so that kiln-dried wood finish (if used) can be installed, offset by other economies?

ANSWER: Must be YES. The delay can be reduced by putting heat into the house as soon as possible. Heavy poured concrete requires several months to dry out, even under most favorable conditions.

12. If the system involves pre-cutting of wood or the use of wood in pre-fabricated members where accuracy is required for erection purposes, or where subsequent shrinkage will cause damage, will the projected economies offset the cost of conditioning the wood to the correct moisture content, evenly distributed throughout its cross-section, before it is cut to size?

ANSWER: Must be YES.

13. In order to obtain reasonable flexibility of design would the system have to incur heavy additional costs in designing, manufacturing, and stocking a wide variety of sizes and shapes?

ANSWER: Should be NO.

14. Notably in the case of poured systems, and in some other cases, could flexibility of product be obtained only by increasing the cost and difficulty of routing forms?

ANSWER: Should be NO.

15. Even if the system is apparently economical for operations near the plant, are the units of the structure so heavy, or so bulky, or so difficult to pack that shipment into any wide area would involve costs that would offset the projected economies?

ANSWER: Must be NO.

16. Is the system likely to require many local manufacturing plants, making the centralization of production impossible?

ANSWER: Should be NO. An Answer of YES might not mean that the system had no merit, as many efficient commercial or-

ganizations operate from local plants. However, the duplication of heavy factory machinery may make it impossible to operate at full capacity and thereby increase the overhead cost. There must be a reasonable prospect of operating each local plant at near capacity to make this form of organization economical.

17. Does the system demand the casting of concrete in such complicated shapes as to make it unlikely that they can ever be made with precision, except at an excessive cost?

ANSWER: Must be NO. In such cases it is probable that the cost of the millionth house will be nearly as great as the cost of the first house because the methods used will be essentially the same.

18. Where the parts of the structure require factory operations in addition to the usual requirements of present-day construction, are such operations readily adaptable to mass-production methods so that the cost will be low for large-scale production?

ANSWER: Must be YES. This requires careful investigation, as most sponsors claim great savings from large-scale production. Certain kinds of work are adaptable to mass-production methods and others are not. The variety of different operations must be a minimum. Operations that can be repeated identically a large number of times on an automatic machine are economical, as for example repetitive punching, cutting, roller die forming, and assemblies that can be jigged and put together on a production line. It is often difficult to realize fully these potential savings.

19. Is the system sufficiently broad-gauge to effect substantial economies in the completed house?

ANSWER: Should be YES. For example, economies in wall construction have been the principal focus of most sponsors. While helping to solve the problem, these alone cannot result in an ultimately inexpensive product.

20. Does the system make any provision for the convenient inclusion of accessories; and if not, could it?

ANSWER: Must be YES. If the new house is to require the same amount of job puttering in the installation of services as is now customary, a chief point of attack on high costs will have been neglected.

21. This is a group of particular questions that apply to only one or two of the proposals. These are briefly listed.

(a) In his zeal for innovation has the sponsor achieved even greater complexity than the present house?

ANSWER: Should be NO.

(b) Has he used a material in such a way that he fails to take full advantage of its useful properties?

ANSWER: Should be NO. For example, steel, with its great strength, is not an economical substitute for merely a wood siding.

(c) Has the sponsor added to his proposal some quirk, such as a heating system, that is either inoperable or expensive to operate?

ANSWER: Should be NO.

(d) Has the sponsor tied to his system ideas of economics or sociology that complicate his marketing problem?

ANSWER: Should be NO.

(e) Does the system exact some expensive operation in the field, such as field-welding or drilling?

ANSWER: Should be NO.

22. Is the structure unnecessarily expensive in that it provides greater strength than is needed?

ANSWER: Should be NO. Excessive strength must be criticized as failure to use materials with maximum economy. Many sponsors are likely to proclaim the great strengths of their products, not realizing that in making such claims they admit that they are requiring the buyer to pay for something he does not need.

23. Will the total carrying charge for the completed house, including interest on investment and annual charges for maintenance and depreciation, be at least no greater than that for the equivalent conventional construction?

ANSWER: Must be YES. This sums up the whole problem of cost, and takes into account the interrelation of first cost with the useful life and necessary repairs normally expected for the house. Particular attention should be given to cost and frequency of roof repairs, the cost of maintaining the siding finish, and the cost of keeping the inside finish up to a reasonable standard of freshness. Beware of interior wall panels that are likely to deteriorate and cannot be replaced at a reasonable cost, and of finish floors that cannot be readily renovated to repair normal wear and tear.

Properties.

Certain properties in the completed building are essential; others are debatable. The debatable properties involve appearance, flexibility of design, degree of fire resistance, and to some extent durability. The essential properties will be considered first.

24. Does the system provide the necessary structural strength to carry the usual loads imposed on a house?

ANSWER: Must be and generally will be YES. Building codes specify minimum requirements for each locality. These requirements are approximately: floor live load, 40 to 50 pounds per square foot; wind pressure, 10 pounds per square foot of vertical surface; flat-roof live load, 40 pounds per square foot for northern climates, down to 20 pounds for the southern states; sloping roofs, 20 to 40 pounds per square foot of projected surface, depending on the roof pitch. In systems of story-height pre-cast concrete wall units the structure must be tied together securely, preferably with horizontal bonding beams at floor levels.

25. If the construction is a wet one, using poured concrete or a large amount of plaster, is the design such that the ultimate shrinkage of wood will cause unsightly or detrimental cracks?

ANSWER: Must be NO.

26. If the construction is wet, is the design such that the heat-insulating material is likely to become wet, thereby reducing its insulating efficiency to the point of inadequacy?

ANSWER: Must be NO. Dampness always reduces the insulating efficiency, in some cases permanently.

27. Does the construction provide sufficient heat insulation to assure economical heating in the winter weather of the northern states?

ANSWER: Must be YES. The cheapest type of wood-frame construction has a heat conductivity of about 0.25 B.T.U. per degree temperature difference, per square foot of wall or roof area. This is the low limit for economical heating, and for a well insulated house, especially where air conditioning is wanted, the standard should be not over 0.10 B.T.U. The question is of less importance in milder climates, but is essential for any system that is to have a wide market in the United States.

28. Is the construction designed so as to avoid condensation caused by warm air striking cold surfaces in the structure?

ANSWER: Must be YES. This is a most difficult question. First it is necessary to consider what portions of the structure the warm inside air will strike. There is always air leakage around wall and ceiling panels and finish floors, and even through plaster. Next a rough estimate must be made of the probable surface temperatures of these parts in cold winter weather. These temperatures cannot usually be calculated by precise methods, but the following values of relative heat conductivity indicate where to look for trouble:

Insulation	about	0.2	units
Wood	"	1.0	"
Brickwork	"	5.0	"
Concrete	"	8.0	"
Steel frame	"	300.0	"

Wood causes no difficulty. Concrete can cause trouble where currents of warm air strike concrete floor or wall surfaces that are directly connected to the outside exposed surfaces by continuous concrete. Steel framing is most likely to cause trouble, as the above figures indicate. There can be no great differences in temperature at various points in a continuous steel member. If one part is cold, it will all be cold. Where one part of a continuous steel frame is exposed to outside cold and a slow leakage of warm air strikes other parts of the frame, there is sure to be condensation. The surface temperature of the entire framing will then be less than the mean between the inside and outside air temperatures.

To appreciate the urgency of this question, it is well to study a psychometric chart. The dew points for air at 70 degrees temperature range from 27 degrees for a 20-per-cent relative humidity to 45 degrees for a 40-per-cent relative humidity. Condensation on floor beams causes wet spots and damage on the ceiling below. Condensation inside of walls may be revealed by damp spots on the inner surface of the wall, or it may be concealed, but it will always cause deterioration and a damp, unhealthy condition.

29. Is the design of the structural floor such that it will provide a cold foundation for the finish floor in cold weather?

ANSWER: Must be NO. There is always some air leakage around the finish floor and any condensation on a cold concrete or metal surface will rot out wood in a few years. A cold finish floor is un-

healthy. Very few types of finish floors can be floated successfully on ordinary insulating materials, because such materials have a low density and are too easily compressible to form good floor foundations. Hence it is difficult to correct a cold structural floor by applying insulation over it.

30. Is the system such that it will be acceptable in climates much colder or warmer than that for which it was first proposed?

ANSWER: Should be YES. If the answer is otherwise, a wide market will not be available. A pertinent example is the case of an open exterior wall joint in which, in northern climates, water would collect and then freeze, causing early deterioration and destruction.

31. Are the materials employed in the construction as durable as those used conventionally?

ANSWER: Should be YES. If the durability has not been demonstrated, there must be sufficient reason for accepting the sponsor's claim for durability, based on his own tests. The properties of copper and lead, for example, when exposed to the weather, are well known. The durability of a painted steel siding should be questioned carefully.

32. Is the system weatherproof, with a siding sufficiently proof against water infiltration and with outside joints that are permanently water-tight?

ANSWER: Must be YES. Joints must not open up as a result of expansion and contraction. Thin concrete is not proof against water infiltration.

33. Is the floor system likely to be too noisy?

ANSWER: Must be NO. The condition must not be noticeably worse than in conventional construction. Steel-floored buildings must be given special scrutiny on this point.

34. Does the system provide for the execution of designs that will be pleasing to the buyer?

ANSWER: Must be YES. As individual tastes differ widely, the most promising systems will afford great flexibility of design. Comparatively restricted systems, if they can be expressed soundly and beautifully, might eventually be accepted by the public when increased standardization is more general. The row is of course a longer one to hoe, but there is no reason why cheapness should

necessitate ugly designs. The ideal of the new economy is improved, rather than diminished, esthetic values.

35. Is the construction necessarily limited to one story?

ANSWER: Should be NO. Many of the lighter and less expensive constructions fall in such a category. At best, they restrict the extent of the market. Moreover, many claim that the bungalow is a less economical form of housing than the two-or-more-story structure. This may be true for some types of structures and not for others.

36. Can the building readily be altered as the needs of the occupant and his family may change?

ANSWER: Should be YES. This is a practical question to which greater attention will probably be paid in the future.

37. Does the construction offer any increase in fire resistance over conventional housing?

ANSWER: Should be YES. But a NO is not decisive. So far, fireproofing has been obtainable only at increased cost, which the average buyer is unwilling to incur and which is not offset by decreased fire-insurance rates. Unquestionably, America's future housing should be more fire-resistant. But at present a YES should be scored as a credit rather than a No as a debit.

Finally, the reader should ask himself whether the system proposed offers any possibility of mass production, of utility, and, again and again, of reduced cost.

It is impossible to allot percentages to these questions weighted so that a numerical score can be obtained for any given proposal. Any system to be completely successful should answer all of them satisfactorily.

Questions for Sponsors

Turn this sheet out, in connection with any system, and ask yourself if the system answers these questions adequately.

Supplement Bibliography

Reference Number			
1	*The Architectural Forum*	March	1931
2	"	August	1931
3	"	March	1932
4	"	May	1932
5	"	July	1932
6	"	September	1932
7	"	October	1932
8	"	December	1932
9	"	March	1933
10	"	April	1933
11	"	June	1933
12	"	July	1933
13	"	November	1933
14	"	April	1934
15	"	May	1934
16	"	June	1934
17	"	November	1934
18	"	February	1935
19	"	July	1935
20	*The Architectural Record*	December	1927
21	"	April	1929
22	"	October	1929
23	"	June	1930
24	"	August	1930
25	"	April	1933
26	"	May	1933
27	"	June	1933
28	"	January	1934
29	"	October	1934
30	*American Architect*	November	1930
31	"	January	1931
32	"	May	1932
33	"	November 5,	1927

Reference Number			
34	*American Architect*	June	1932
35	"	July	1933
36	"	March	1934
37	"	September	1934
38	"	May	1935
39	*American Homes*	November	1934
40	*House and Garden*	January	1930
41	*The American Contractor*	November 17,	1928
42	*The Aerologist*	August	1927
43	*The Iron Age* — reprint of articles on " The Dwellings of Tomorrow " — 1926		
44	*The Iron Age* — reprint of articles on " Steel in House Construction " — 1931		
45	United States Department of Commerce, Special Circular No. 694, March 21, 1928		
46	United States Department of Commerce, Special Circular No. 703, May 23, 1928		
47	United States Department of Commerce, Special Circular No. 705, June 1, 1928		
48	*Chantiers*	March	1933
49	*Hardware Age*	May 23,	1935
50	Portland Cement Association — Report on Survey of Concrete House Construction Systems, 1934		
51	*American Builder*	June	1933
52	*American Lumberman*	April 13,	1935
53	Arthur D. Little, Inc. — *Industrial Bulletin* No. 98 —	February	1935
54	*Concrete Products*	February	1925
55	"	November	1925
56	*Engineering News-Record* — reprint of January 16, January 23, January 30, 1930		
57	*Engineering News-Record*	April 11,	1935
58	*Construction Methods*	March	1933
59	Ministry of Health (Great Britain) — Report of Standardisation and New Methods of Construction Committee, 1920		
60	Ministry of Health (Great Britain) — Third Interim		

Reference Number			
	Report of Committee on New Methods of House Construction, January 29, 1925		
61	*The Technology Review*	January	1933
62	American Sheet and Tin Plate Company — "Steel Framing for Small Residences" 1933		
63	*Contract Record and Engineering Review* August 31, 1927		
64	Edward W. Coffin and Harry B. Humphrey — "Handbook on Building Walls with Rammed Earth," Washington, 1924		
65	*Bakelite Review*	July	1934
66	*The Architectural Forum*	July	1935
67	*The Architectural Record*	August	1935
68	*The California Plasterer*	July	1935

ALPHABETICAL INDEX OF SYSTEMS DESCRIBED IN DETAIL

System	*Type* [1]	*Sponsor*	*Year* [2]	*Page*
Aluminaire	IVa–V	A. Lawrence Kocher and Albert Frey	1931	337
American Moto-homes	V	American Houses, Inc.	1932	339
Armco	V	American Rolling Mill Company, through Insulated Steel, Inc.	1932	343
Atholl	IVa	Duke of Atholl	1920–1925	347
Atterbury	V	Russell Sage Foundation and Grosvenor Atterbury	1907	349
Banks	II	J. S. Banks	Unknown	355
Bates	IVb	Walter Bates Steel Corporation	1925–1930	357
Beamy-style	II	Housing Company	1925	359
Berloy	IVb–V	The Berger Manufacturing Company	1935	363
Boehler	V	Alfred Schmidt	1926	367
British Systems	(see also Atholl, Kent, Telford, Weir)		1920–1925	369
Bonding Block	III	The Bonding Block Constructional Company, Ltd.		373
Carter	III	The Mount Granitic Stone Company		376
Channello	III	The Channello Concrete Construction Company		369
Duo-Slab	II–III	William Airey and Son, Ltd.		373
Duplex Sheath	II	The Duplex Sheath Construction Company		371
Giles	II	C. Giles		371
Hardy	III	T. Elson Hardy		371
Jefferies	III	Arthur F. Jefferies Construction Company		371
Loc Bloc	III	T. A. and J. L. Aldridge		371
Lowestoft	II–III	S. W. Mobbs		373
Swingler	III	E. Swingler		373
Triangular	III	The Triangular Concrete Construction Company		376
Trussit	II	The Self Sentering Expanded Metal Works, Ltd.		373

System	*Type* [1]	*Sponsor*	*Year* [2]	*Page*
Waller	II–III	The Waller Housing Corporation		376
Broderick	IVb	Broderick Firesafe Homes Association, succeeded by Steel Frame House Company	1925	379
Buell	VI	T. H. Buell and Company	1930–1935	381
Byrne	III	Barry Byrne	1930–1935	385
Colorado Fuel	IVa	McKay Fireproof Company	1925–1930	387
Concrete Grid Form	II–III	Lloyd Wright	1930	389
Concrete House	III	Portland Cement Association	1934	391
Con-Tee	II	Con-Tee Company	Unknown	393
Corkanstele	IVb	Corkanstele, Inc.	1926	395
Donaldson	II	C. W. Donaldson	1915–1920	397
Dymaxion	VII	R. Buckminster Fuller	1928	401
"E" Frame	IVb–V	Housing Company	1934	405
Earley	III	Earley Process Corporation	1935	407
Edison	II	Edison Cement Corporation	1907	411
Enterlocking	I	Long-Bell Lumber Sales Corporation	1933	413
Fellgren	II	C. W. Fellgren	1923	417
Ferro-Enamel	IVb	Ferro-Enamel Corporation	1932	419
Field	IVb	Howe and Lescaze	1933	423
Flagg	II	Ernest Flagg	1922	425
Forest Products	V	Forest Products Laboratory	1935	429
General Houses	V	General Houses, Inc.	1932	433
Gropius	IVa	Walter Gropius	1930	435
Hahn	II–III	Hahn Concrete Lumber System	1915–1920	439
Hodgson	V	E. F. Hodgson Company	1892	441
Ingersoll	II	C. H. Ingersoll	1915–1920	445
Kent	III	Colonel H. Vaughan Kent	1920–1925	447
Knipe	II	L. G. Knipe-Insulated Concrete System, Ltd.	1925–1930	449

System	*Type* [1]	*Sponsor*	*Year* [2]	*Page*
Lakeolith	III	Simon Lake and Connecticut Lakeolith Corporation	1918	451
Lindeberg	V	Harrie T. Lindeberg	1933	453
Lockwood	III	Ernest H. Lockwood	1930–1935	457
Low-Cost Farmhouse	V	A. Lawrence Kocher and Albert Frey	1934	459
Lurie	IVa–IVb	Metal Lath Manufacturers' Association	1935	463
McKay	IVa	McKay Engineering Company	1930–1935	465
Microporite	IVa	John B. Pierce Foundation	1935	467
Minimal	IVa	Le Corbusier and Jeanneret	1925–1930	471
Monolithic Hollow Wall	II	Monolith Hollow Wall Company	1925–1930	475
Morrill	II	Milton Dana Morrill	1908	477
Needham	III	The Needham Concrete House Company	1921	481
Neutra Diatom	III–VII	Richard J. Neutra (with Peter Pfisterer)	1925–1930	483
Olmsted	II–III	A. H. Olmsted	1930–1935	487
Palmer	V	Palmer Steel Buildings, Inc.	1934	489
Parkhurst	III	L. M. Parkhurst	1930–1935	493
Phoenix	III	German — Unknown	Unknown	495
Plate Girder	V	Housing Company	1929	497
Pope and Cottle	V	Pope and Cottle Company	1921	501
Porcelain Steel	V	Porcelain Steel Buildings Company	1925–1930	503
Porete	II	Porete Manufacturing Company	1932	505
Rockwood	III	Rockwood Corporation	1925–1930	507
Rostone	III	Rostone, Inc.	1933	509
Simpson Craft	III	John T. Simpson	1915–1920	513
Stahlhausbau	IVa–V	Deutsche Stahlhausbau-Gesellschaft	1928	515
Steel Frame	IVb	Steel Frame House Company	1925–1930	519
Steel-Bilt	IVa	Steel-Bilt Homes, Inc.	1930–1935	521
Steelmode	IVb	Housing Company	1928	525
Stockade	II–III	Stockade Building System, Inc.	1920–1925	527
Stran-Steel	IVb	Stran-Steel Corporation	1933	531

System	*Type* [1]	*Sponsor*	*Year* [2]	*Page*
Structolite	II	United States Gypsum Company	1920–1925	533
Superior	I	Superior Buildings Company	1931	537
Suspension Steel	IVb	Suspension Steel Concrete Company	1909	541
Swedish Systems	V	Various Swedish Firms	1920–1925	542
IBO				545
Knivsta				547
Sesam				549
Stadens				551
Tappan Frame	IVa	Robert Tappan	1927	553
Tappan Unit	V	Robert Tappan	1925–1930	557
Tee-Stone	III	Tee-Stone Corporation	1920–1925	559
Telford	V	Braithwaite and Company, Engineers, Ltd.	1920–1925	561
Universal	V	Universal Housing Corporation	1933	565
V.D.L.	III	Van der Leeuw	1934	567
Van Guilder	II	Van Guilder Double Wall Company	1910–1915	571
Vinylite	V	Anonymous	1930–1935	573
Webb	III	R. C. Webb	1920–1925	575
Wedberg	II	Axel G. Wedberg	1925–1930	577
Weir	V	G. and J. Weir, Ltd.	1920–1925	579
Wheeling	V	Wheeling Corrugating Company	1933	583
Wright	II–III	Frank Lloyd Wright	1928	585
Wudnhous	V	Housing Company	1931	587

[1] I. Pre-cut Lumber
II. Concrete Formed in Situ
III. Pre-cast Unit
IVa. Metal Frame — Skyscraper
IVb. Metal Frame — Close-spaced
V. Panel
VI. Unitary
VII. Suspension

[2] The year, or the nearest five years, of first known public use

CHRONOLOGICAL INDEX OF SYSTEMS DESCRIBED IN DETAIL

(Divided into five-year periods of dates of first known use)

Date	*System*	*Type*[1]	*Sponsor*	*Page*
1890–1895	Hodgson	V	E. F. Hodgson Company	441
1895–1900				
1900–1905				
1905–1910	Atterbury	V	Russell Sage Foundation and Grosvenor Atterbury	349
	Edison	II	Edison Cement Corporation	411
	Morrill	II	Milton Dana Morrill	477
	Suspension Steel	IVb	Suspension Steel Concrete Company	541
1910–1915	Van Guilder	II	Van Guilder Double Wall Company	571
1915–1920	Donaldson	II	C. W. Donaldson	397
	Hahn	II–III	Hahn Concrete Lumber System	439
	Ingersoll	II	C. H. Ingersoll	445
	Lakeolith	III	Simon Lake and Connecticut Lakeolith Corporation	451
	Simpson Craft	III	John T. Simpson	513
1920–1925	Atholl	IVa	Duke of Atholl	347
	British Systems			369
	Bonding Block	III	The Bonding Block Constructional Company, Ltd.	373
	Carter	III	The Mount Granitic Stone Company	376
	Channello	III	The Channello Concrete Construction Company	369
	Duo-Slab	II–III	William Airey and Son, Ltd.	373
	Duplex Sheath	II	The Duplex Sheath Construction Company	371
	Giles	II	C. Giles	371
	Hardy	III	T. Elson Hardy	371
	Jefferies	III	Arthur F. Jefferies Construction Company	371
	Loc Bloc	III	T. A. and J. L. Aldridge	371
	Lowestoft	II–III	S. W. Mobbs	373

Date	*System*	*Type*[1]	*Sponsor*	*Page*
	Swingler	III	E. Swingler	373
	Triangular	III	The Triangular Concrete Construction Company	376
	Trussit	II	The Self Sentering Expanded Metal Works, Ltd.	373
	Waller	II–III	The Waller Housing Corporation	376
	Fellgren	II	C. W. Fellgren	417
	Flagg	II	Ernest Flagg	425
	Kent	III	Colonel H. Vaughan Kent	447
	Needham	III	The Needham Concrete House Company	481
	Pope and Cottle	V	Pope and Cottle Company	501
	Stockade	II–III	Stockade Building System, Inc.	527
	Structolite	II	United States Gypsum Company	533
	Swedish Systems	V	Various Swedish Firms	542
	IBO			545
	Knivsta			547
	Sesam			549
	Stadens			551
	Tee-Stone	III	Tee-Stone Corporation	559
	Telford	V	Braithwaite and Company, Engineers, Ltd.	561
	Webb	III	R. C. Webb	575
	Weir	V	G. and J. Weir, Ltd.	579
	Wright	II–III	Frank Lloyd Wright	585
1925–1930	Bates	IVb	Walter Bates Steel Corporation	357
	Beamy-style	II	Housing Company	359
	Boehler	V	Alfred Schmidt	367
	Broderick	IVb	Broderick Firesafe Homes Association, succeeded by Steel Frame House Company	379
	Colorado Fuel	IVa	McKay Fireproof Company	387
	Corkanstele	IVb	Corkanstele, Inc.	395
	Dymaxion	VII	R. Buckminster Fuller	401
	Knipe	II	L. G. Knipe-Insulated Concrete System, Ltd.	449
	Minimal	IVa	Le Corbusier and Jeanneret	471
	Monolithic Hollow Wall	II	Monolith Hollow Wall Company	475
	Neutra Diatom	III–VII	Richard J. Neutra (with Peter Pfisterer)	483
	Plate Girder	V	Housing Company	497
	Porcelain Steel	V	Porcelain Steel Buildings Company	503

Date	*System*	*Type* [1]	*Sponsor*	*Page*
	Rockwood	III	Rockwood Corporation	507
	Stahlhausbau	IVa–V	Deutsche Stahlhausbau-Gesellschaft	515
	Steel Frame	IVb	Steel Frame House Company	519
	Steelmode	IVb	Housing Company	525
	Tappan Frame	IVa	Robert Tappan	553
	Tappan Unit	V	Robert Tappan	557
	Wedberg	II	Axel G. Wedberg	577
1930–1935	Aluminaire	IVa–V	A. Lawrence Kocher and Albert Frey	337
	American Motohomes	V	American Houses, Inc.	339
	Armco	V	American Rolling Mill Company, through Insulated Steel, Inc.	343
	Berloy	IVb–V	The Berger Manufacturing Company	363
	Buell	VI	T. H. Buell and Company	381
	Byrne	III	Barry Byrne	385
	Concrete Grid Form	II–III	Lloyd Wright	389
	Concrete House	III	Portland Cement Association	391
	"E" Frame	IVb–V	Housing Company	405
	Earley	III	Earley Process Corporation	407
	Enterlocking	I	Long-Bell Lumber Sales Corporation	413
	Ferro-Enamel	IVb	Ferro-Enamel Corporation	419
	Field	IVb	Howe and Lescaze	423
	Forest Products	V	Forest Products Laboratory	429
	General Houses	V	General Houses, Inc.	433
	Gropius	IVa	Walter Gropius	435
	Lindeberg	V	Harrie T. Lindeberg	453
	Lockwood	III	Ernest H. Lockwood	457
	Low-Cost Farmhouse	V	A. Lawrence Kocher and Albert Frey	459
	Lurie	IVa–IVb	Metal Lath Manufacturers' Association	463
	McKay	IVa	McKay Engineering Company	465
	Microporite	IVa	John B. Pierce Foundation	467
	Olmsted	II–III	A. H. Olmsted	487
	Palmer	V	Palmer Steel Buildings, Inc.	489
	Parkhurst	III	L. M. Parkhurst	493
	Porete	II	Porete Manufacturing Company	505
	Rostone	III	Rostone, Inc.	509
	Steel-Bilt	IVa	Steel-Bilt Homes, Inc.	521
	Stran-Steel	IVb	Stran-Steel Corporation	531

Date	*System*	*Type* [1]	*Sponsor*	*Page*
	Superior	I	Superior Buildings Company	537
	Universal	V	Universal Housing Corporation	565
	V.D.L.	III	Van der Leeuw	567
	Vinylite	V	Anonymous	573
	Wheeling	V	Wheeling Corrugating Company	583
	Wudnhous	V	Housing Company	587
Recent	Banks	II	J. S. Banks	355
but	Con-Tee	II	Con-Tee Company	393
Unknown	Phoenix	III	German — Unknown	495

[1] I. Pre-cut Lumber
II. Concrete Formed in Situ
III. Pre-cast Unit
IVa. Metal Frame — Skyscraper
IVb. Metal Frame — Close-spaced
V. Panel
VI. Unitary
VII. Suspension

CLASSIFIED INDEX OF SYSTEMS DESCRIBED IN DETAIL

(By Types)

Type	*System*	*Year* [1]	*Sponsor*	*Page*
I. Pre-cut Lumber	Enterlocking	1933	Long-Bell Lumber Sales Corporation	413
	Superior	1931	Superior Buildings Company	537
II. Concrete Formed in Situ	Banks	Unknown	J. S. Banks	355
	Beamy-style	1925	Housing Company	359
	British Systems	1920–1925		369
	Duo-Slab [3]		William Airey and Son, Ltd.	373
	Duplex Sheath		The Duplex Sheath Construction Company	371
	Giles		C. Giles	371
	Lowestoft [3]		S. W. Mobbs	373
	Trussit		The Self Sentering Expanded Metal Works, Ltd.	373
	Waller [3]		The Waller Housing Corporation	376
	Concrete Grid Form [3]	1930	Lloyd Wright	389
	Con-Tee	Unknown	Con-Tee Company	393
	Donaldson	1915–1920	C. W. Donaldson	397
	Edison	1907	Edison Cement Corporation	411
	Fellgren	1923	C. W. Fellgren	417
	Flagg	1922	Ernest Flagg	425
	Hahn [3]	1915–1920	Hahn Concrete Lumber System	439
	Ingersoll	1915–1920	C. H. Ingersoll	445
	Knipe	1925–1930	L. G. Knipe-Insulated Concrete System, Ltd.	449
	Monolithic Hollow Wall	1925–1930	Monolith Hollow Wall Company	475
	Morrill	1908	Milton Dana Morrill	477
	Olmsted [3]	1930–1935	A. H. Olmsted	487
	Porete	1932	Porete Manufacturing Company	505

Type	*System*	*Year* [1]	*Sponsor*	*Page*
	Stockade [3]	1920–1925	Stockade Building System, Inc.	527
	Structolite	1920–1925	United States Gypsum Company	533
	Van Guilder	1910–1915	Van Guilder Double Wall Company	571
	Wedberg	1925–1930	Axel G. Wedberg	577
	Wright [3]	1923	Frank Lloyd Wright	585
III. Pre-cast Unit	British Systems	1920–1925		369
	Bonding Block		The Bonding Block Constructional Company, Ltd.	373
	Carter		The Mount Granitic Stone Company	376
	Channello		The Channello Concrete Construction Company	369
	Duo-Slab [2]		William Airey and Son, Ltd.	373
	Hardy		T. Elson Hardy	371
	Jefferies		Arthur F. Jefferies Construction Company	371
	Loc Bloc		T. A. and J. L. Aldridge	371
	Lowestoft [2]		S. W. Mobbs	373
	Swingler		E. Swingler	373
	Triangular		The Triangular Concrete Construction Company	376
	Waller [2]		The Waller Housing Corporation	376
	Byrne	1930–1935	Barry Byrne	385
	Concrete Grid Form [2]	1930	Lloyd Wright	389
	Concrete House	1934	Portland Cement Association	391
	Earley	1935	Earley Process Corporation	407
	Hahn [2]	1915–1920	Hahn Concrete Lumber System	439
	Kent	1920–1925	Colonel H. Vaughan Kent	447
	Lakeolith	1918	Simon Lake and Connecticut Lakeolith Corporation	451
	Lockwood	1930–1935	Ernest H. Lockwood	457
	Needham	1921	The Needham Concrete House Company	481

Type	*System*	*Year* [1]	*Sponsor*	*Page*
	Neutra Diatom [6]	1925–1930	Richard J. Neutra (with Peter Pfisterer)	483
	Olmsted [2]	1930–1935	A. H. Olmsted	487
	Parkhurst	1930–1935	L. M. Parkhurst	493
	Phoenix	Unknown	German — Unknown	495
	Rockwood	1925–1930	Rockwood Corporation	507
	Rostone	1933	Rostone, Inc.	509
	Simpson Craft	1915–1920	John T. Simpson	513
	Stockade [2]	1920–1925	Stockade Building System, Inc.	527
	Tee-Stone	1920–1925	Tee-Stone Corporation	559
	V.D.L.	1934	Van der Leeuw	567
	Webb	1920–1925	R. C. Webb	575
	Wright [2]	1923	Frank Lloyd Wright	585
IVa. Metal Frame — Sky-scraper	Aluminaire [5]	1931	A. Lawrence Kocher and Albert Frey	337
	Atholl	1920–1925	Duke of Atholl	347
	Colorado Fuel	1925–1930	McKay Fireproof Company	387
	Gropius	1930	Walter Gropius	435
	Lurie [4b]	1935	Metal Lath Manufacturers' Association	463
	McKay	1930–1935	McKay Engineering Company	465
	Microporite	1935	John B. Pierce Foundation	467
	Minimal	1925–1930	Le Corbusier and Jeanneret	471
	Stahlhausbau [5]	1928	Deutsche Stahlhausbau-Gesellschaft	515
	Steel-Bilt	1930–1935	Steel-Bilt Homes, Inc.	521
	Tappan Frame	1927	Robert Tappan	553
IVb. Metal Frame — Close-spaced	Bates	1925–1930	Walter Bates Steel Corporation	357
	Berloy [5]	1935	The Berger Manufacturing Company	363
	Broderick	1925	Broderick Firesafe Homes Association, succeeded by Steel Frame House Company	379
	Corkanstele	1926	Corkanstele, Inc.	395
	"E" Frame [5]	1934	Housing Company	405
	Ferro-Enamel	1932	Ferro-Enamel Corporation	419
	Field	1933	Howe and Lescaze	423
	Lurie [4a]	1935	Metal Lath Manufacturers' Association	463

Type	*System*	*Year* [1]	*Sponsor*	*Page*
	Steel Frame	1925–1930	Steel Frame House Company	519
	Steelmode	1928	Housing Company	525
	Stran-Steel	1933	Stran-Steel Corporation	531
	Suspension Steel	1909	Suspension Steel Concrete Company	541
V. Panel	Aluminaire [4a]	1931	A. Lawrence Kocher and Albert Frey	337
	American Motohomes	1932	American Houses, Inc.	339
	Armco	1932	American Rolling Mill Company, through Insulated Steel, Inc.	343
	Atterbury	1907	Russell Sage Foundation and Grosvenor Atterbury	349
	Berloy [4b]	1935	The Berger Manufacturing Company	363
	Boehler	1926	Alfred Schmidt	367
	"E" Frame [4b]	1934	Housing Company	405
	Forest Products	1935	Forest Products Laboratory	429
	General Houses	1932	General Houses, Inc.	433
	Hodgson	1892	E. F. Hodgson Company	441
	Lindeberg	1933	Harrie T. Lindeberg	453
	Low-Cost Farmhouse	1934	A. Lawrence Kocher and Albert Frey	459
	Palmer	1934	Palmer Steel Buildings, Inc.	489
	Plate Girder	1929	Housing Company	497
	Pope and Cottle	1921	Pope and Cottle Company	501
	Porcelain Steel	1925–1930	Porcelain Steel Buildings Company	503
	Stahlhausbau [4a]	1928	Deutsche Stahlhausbau-Gesellschaft	515
	Swedish Systems	1920–1925	Various Swedish Firms	542
	IBO			545
	Knivsta			547
	Sesam			549
	Stadens			551
	Tappan Unit	1925–1930	Robert Tappan	557
	Telford	1920–1925	Braithwaite and Company, Engineers, Ltd.	561

Type	*System*	*Year* [1]	*Sponsor*	*Page*
	Universal	1933	Universal Housing Corporation	565
	Vinylite	1930–1935	Anonymous	573
	Weir	1920–1925	G. and J. Weir, Ltd.	579
	Wheeling	1933	Wheeling Corrugating Company	583
	Wudnhous	1931	Housing Company	587
VI. Unitary	Buell	1930–1935	T. H. Buell and Company	381
VII. Suspension	Dymaxion	1928	R. Buckminster Fuller	401
	Neutra	1925–1930	Richard J. Neutra (with Peter Pfisterer)	483
	Diatom [3]			

[1] The year, or the nearest five years, of first known public use
[2] Also in Type II
[3] Also in Type III
[4a] Also in Type IVa
[4b] Also in Type IVb
[5] Also in Type V
[6] Also in Type VII

UNIVERSAL
LIBRARY

120 057

UNIVERSAL
LIBRARY